June 14, 1938. A. S. DONALDSON 2,120,834

BOUDOIR ACCESSORY

Filed March 28, 1935

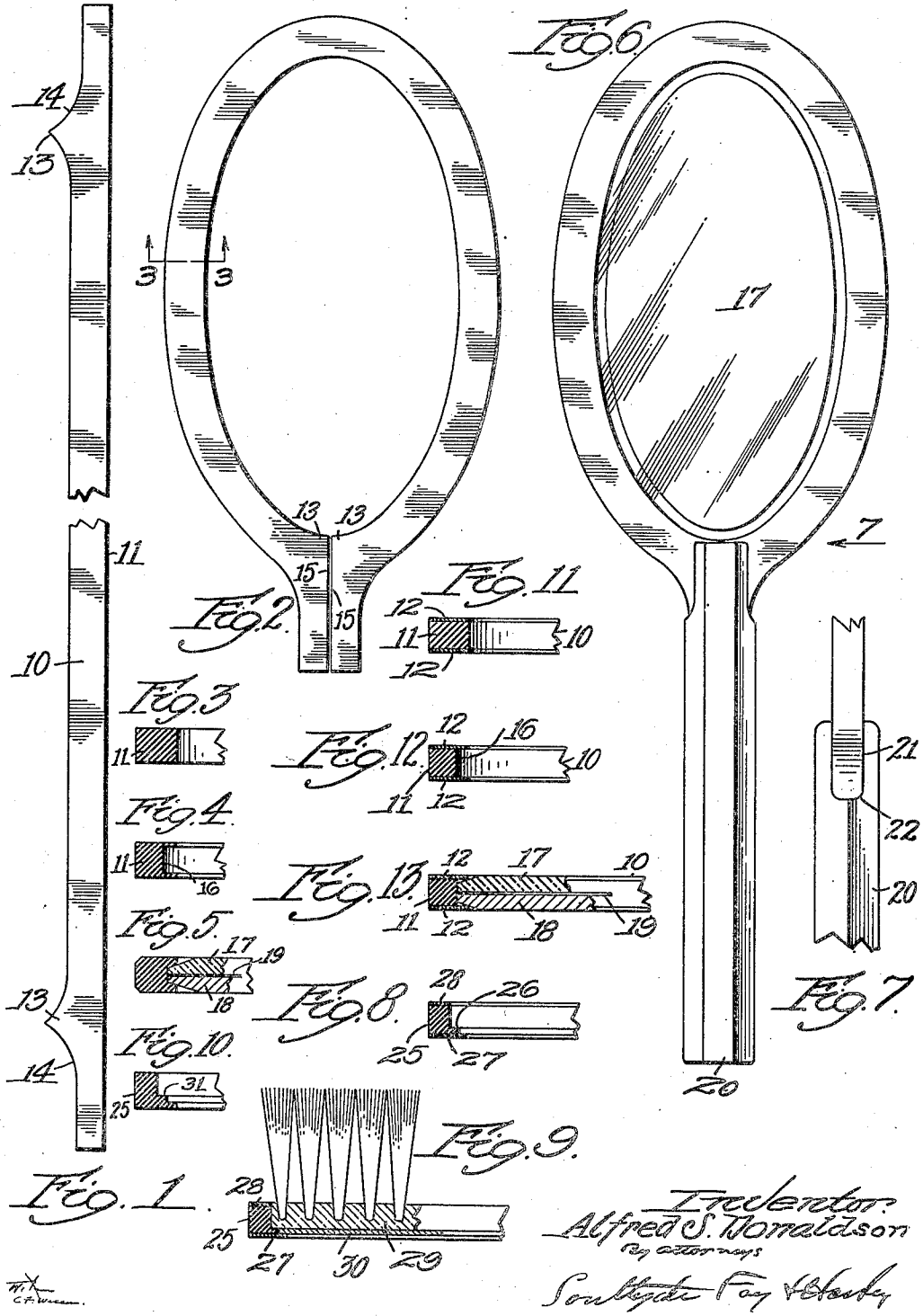

Inventor:
Alfred S. Donaldson
By attorneys
Southgate Fay & Hardy

Patented June 14, 1938 2,120,834

UNITED STATES PATENT OFFICE

2,120,834

BOUDOIR ACCESSORY

Alfred S. Donaldson, Newark, N. J., assignor, by mesne assignments, to E. I. Du Pont de Nemours & Company, Wilmington, Del., a corporation of Delaware

Application March 28, 1935, Serial No. 13,500

1 Claim. (Cl. 88—102)

This invention relates to boudoir accessories and can be applied to a brush, mirror or other article of the same general nature.

The principal objects of the invention are to provide a frame and back for such an article which can be blanked out easily and bent into shape and then routed or provided with an inside groove all around for receiving the mirror or the solid part of the brush back or the like; to provide a simple and convenient construction by which the handle can be applied expeditiously and inexpensively; to provide a construction which will be neat and durable; to provide a novel blank from which such a frame can be made, and to provide an improved method of manufacture.

Other objects and advantages of the invention will appear hereinafter.

Reference is to be had to the accompanying drawing, in which

Fig. 1 is a plan of a blank from which the main portion of the article can be made;

Fig. 2 is a front view showing the blank bent up into shape;

Fig. 3 is a sectional view on the line 3—3 of Fig. 2;

Fig. 4 is a sectional view taken at the same point after the next operation is completed;

Fig. 5 is a view taken at the same point after a mirror and back, or two opposite mirrors, are introduced into the frame;

Fig. 6 is a front view of the finished article;

Fig. 7 is an edge view of a portion thereof, as indicated by the arrow 7 in Fig. 6;

Fig. 8 is a view like Fig. 3 showing a form of this invention particularly applicable to brushes or to any article which has to be set into one side because it projects from that side;

Fig. 9 is a longitudinal sectional view of the same showing the brush in position and the article completed;

Fig. 10 is a sectional view showing a substitute for the form shown in Fig. 8;

Fig. 11 is a modification of the form shown in Fig. 3;

Fig. 12 is a modification of the form shown in Fig. 4; and

Fig. 13 is a modification of the form shown in Fig. 5.

Articles of this kind at the present time are made by methods which do not permit the flexibility or interchangeability of design or style effects which are made possible by this construction.

Referring to the first seven figures, a blank 10 is cut out to the shape shown and comprises a central straight main body 11 of pyroxylin or other material which can be used for this purpose. This practically straight blank is bent around a form so that it will be formed to the necessary shape, which may be an elliptical shape, as shown, and two projections 13 near the ends are brought together at the lower end. The curved line 14 of the blank is here changed to a straight edge 15 on both ends and these ends come into contact with each other.

At this point the two lower ends are temporarily clamped together and the formed blank is placed on the table of a machine carrying a routing or similar tool. The main body 11 is cut back at 16, as shown in Fig. 4. This cut extends all the way around the article inside. This leaves an inside groove all around the frame bounded by a ledge. Fig. 5 shows the outside edge beveled on both edges all around. This feature may be used or not.

The frame, at this stage of its manufacture, is flexible and the lower ends can be spread apart. Thus any desired article can be introduced into the frame. The form shown in Fig. 5 is preferred for the reception of a mirror 17 and a back 18 or even a second mirror facing in the opposite direction. These parts 17 and 18, if made of glass, have beveled surrounding edges, preferably.

It will be seen that the bevel edges fit up against the inner walls of the groove in the main body 11. This groove can be trimmed off in the routing machine in either way.

The mirror or other inserts having been placed in position, preferably with a sheet 19 of soft material between them, the lower ends of the blank are cemented together so that it forms a rigid frame. This completes the production of the frame or head of the article or accessory. A form of blank having opposite sides 12 of contrasting color is shown in Figs. 11, 12 and 13. Here the groove 16 is formed by cutting the main body away from one side 12 to the other.

It will be understood that the two lower ends which are now rigid with each other are formed with parallel front and back surfaces. A handle 20 of pyroxylin, glass, or any other material of any desired shape, is provided with a slot 21 at the top, just fitting these projections, which extends all the way through the handle. The width of this slot is just equal to the thickness of the back or frame of the article and it is applied to it by inserting these two ends into the notch or slot and cementing it thereto on

both surfaces, or fastening it thereto by mechanical or other means. Preferably the slot **21** is rounded at **22** at the bottom and the ends of the frame are rounded to fit this construction so that a neat and uniform appearance will be provided. The rounded part **22** also furnishes a surface for receiving the cement so as to add to its strength.

In the form shown in Figs. 8 and 9 the invention is shown as applied to the making of a brush frame. The same blank is shown as in Figs. 11 and 12, but it will be observed that the main body **25** is provided with an integral ledge **26** at one side. There is an outside thin piece **27** on this side which furnishes a second ledge at this point. A thin sheet **28** like the other is shown at the other side of the article. when the article is trimmed up in the routing machine or elsewhere, the inside surface of the body **25** is cut out uniformly. In this case it will be observed that a glass or other face **29** can be inserted from the upper side, thus constituting the face of a brush in the form shown. Preferably an ornamental sheet **30** of pyralin, glass or any desired material is inserted first to bear against the inside surface of the sheet **27** and of the same thickness as the ledge **26**. This furnishes a backing for the back of the brush and a surface on which an ornamentation may be provided and completes the ornamentation of the back. Sometimes a sheet **30** of pyroxylin and a back **29** are cemented in position to provide a solid article and also the preliminary steps, as far as Figs. 1 and 2 show, are the same as in the first form described. The handle can be provided as described above.

A preferred way of making a brush is shown in Fig. 10 where the conditions are similar except that the sheets **27** and **28** are omitted and a second integral ledge **31** is provided.

This invention is not limited to the two particular articles shown or to the use of a method of making either of the particular articles illustrated.

Having thus described my invention and the advantages thereof, I do not wish to be limited to the details herein disclosed, otherwise than as set forth in the claim, but what I claim is:—

As an article of manufacture, a boudoir accessory comprising a surrounding plastic plane frame having two ends projecting radially from said frame and provided with flat edges in contact, said edges having projections registering with each other to form a continuous surface with the inner surface of the frame, the ends being secured together and projecting outwardly from the frame, said frame having an inner groove entirely around the same, a back having its edge located and held in said groove, said frame being in contact with the back entirely around the article, and a handle having a central slot in its end extending all the way through the handle into which slot said ends project and which they fit, said ends being secured in said slot, whereby the inner end of the handle covers and conceals the seam between said ends, leaving said ends exposed at the sides of the handle.

ALFRED S. DONALDSON.