US00D348074S

United States Patent [19]

Asano

[11] **Patent Number: Des. 348,074**

[45] **Date of Patent: ** Jun. 21, 1994**

[54] **PORTABLE DRILL**

[75] Inventor: **Osamu Asano**, Tokyo, Japan

[73] Assignee: **Nitto Kohki Co. Ltd.**, Tokyo, Japan

[**] Term: **14 Years**

[21] Appl. No.: **861**

[22] Filed: **Oct. 27, 1992**

[30] **Foreign Application Priority Data**

May 1, 1992 [JP] Japan 4-12940

[52] **U.S. Cl.** **D15/132**; D8/69

[58] **Field of Search** D8/69; 408/9, 17, 132, 408/87, 90, 135, 234, 236; D15/132

[56] **References Cited**

U.S. PATENT DOCUMENTS

D. 284,970 8/1986 Wolff D15/132
D. 325,389 4/1992 Lin D15/132
D. 329,438 9/1992 Asano et al. D15/132
4,624,607 11/1986 Kato et al. 408/17

Primary Examiner—Alan P. Douglas
Assistant Examiner—J. H. Musgrove
Attorney, Agent, or Firm—Wenderoth, Lind & Ponack

[57] **CLAIM**

The ornamental design for a portable drill, as shown.

DESCRIPTION

FIG. **1** is a top plan view of a portable drill showing my new design;
FIG. **2** is a front elevational view;
FIG. **3** is a bottom plan view;
FIG. **4** is a rear elevational view;
FIG. **5** is a right side elevational view;
FIG. **6** is a left side elevational view thereof; and,
FIG. **7** is a top, front, left perspective view thereof.

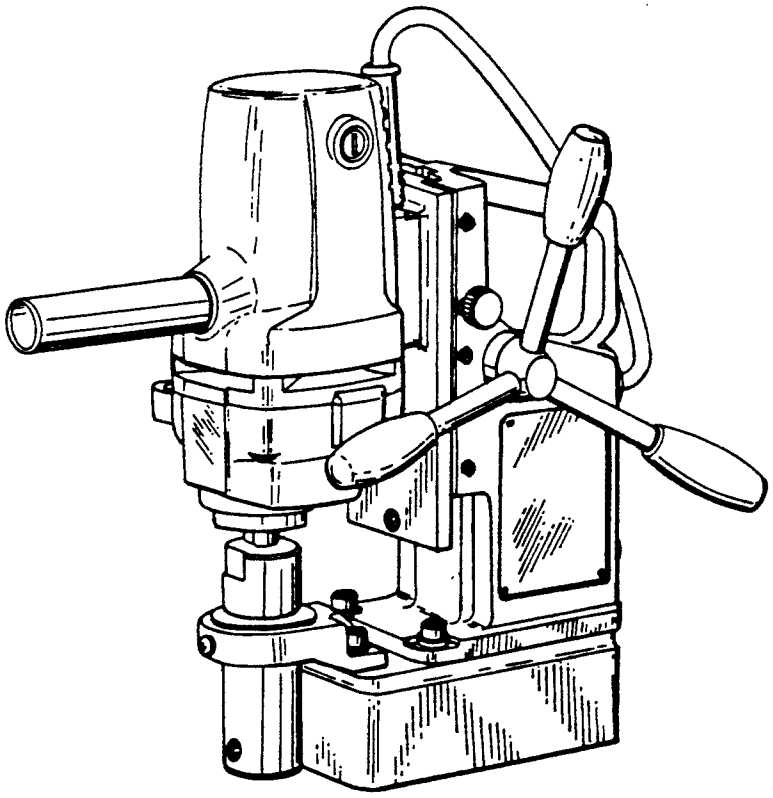

FIG. 1

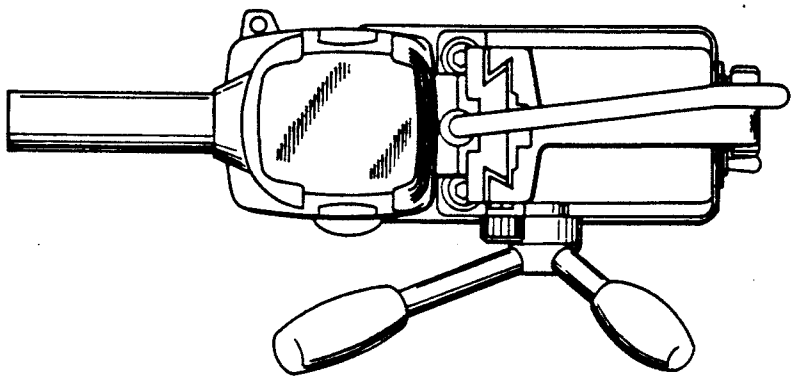

FIG. 2

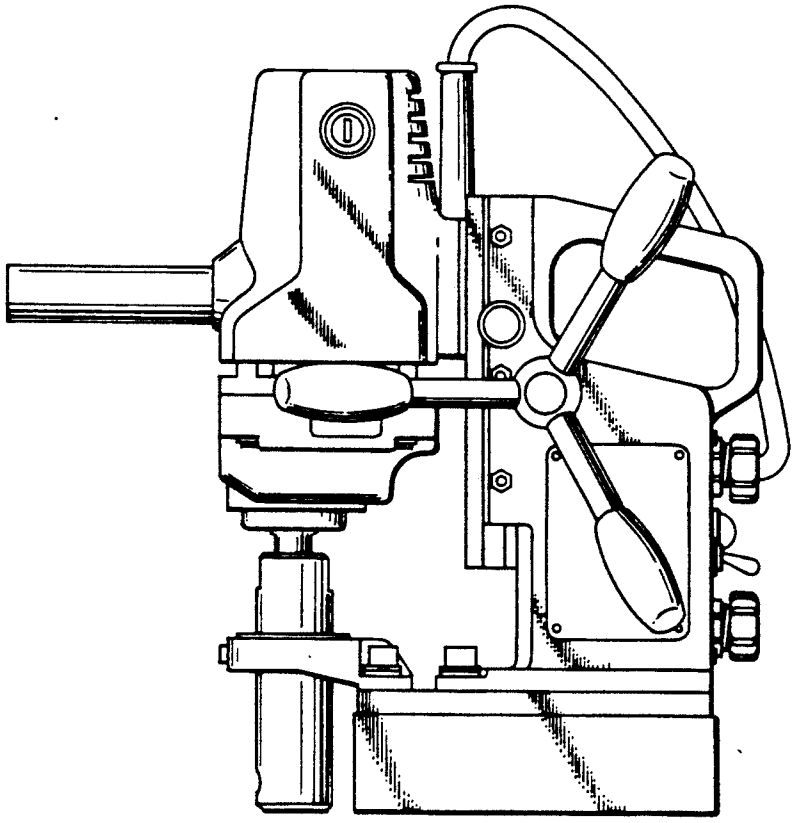

FIG. 3

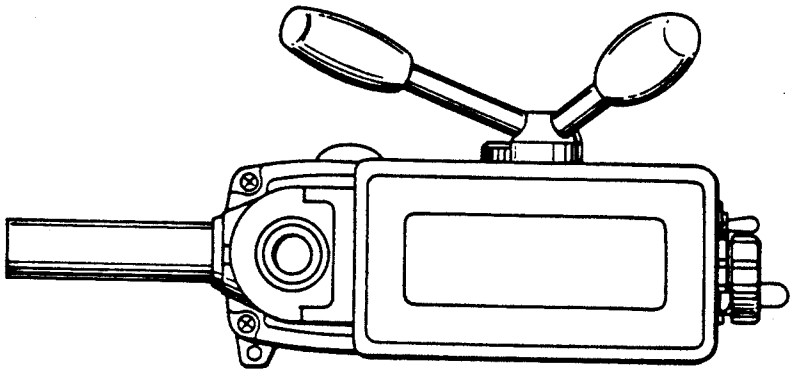

FIG. 4

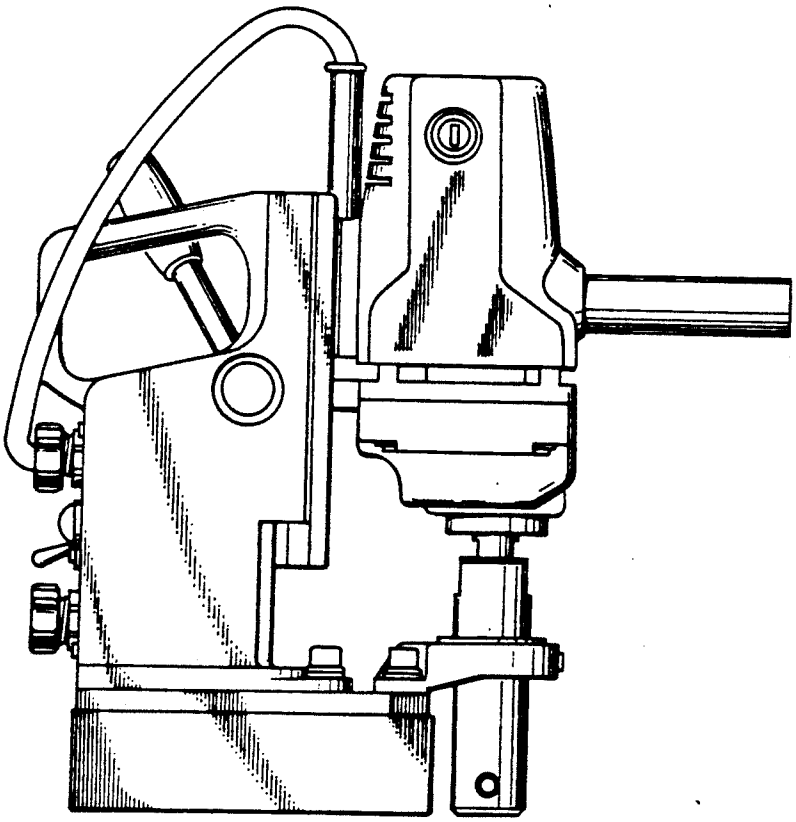

FIG. 6

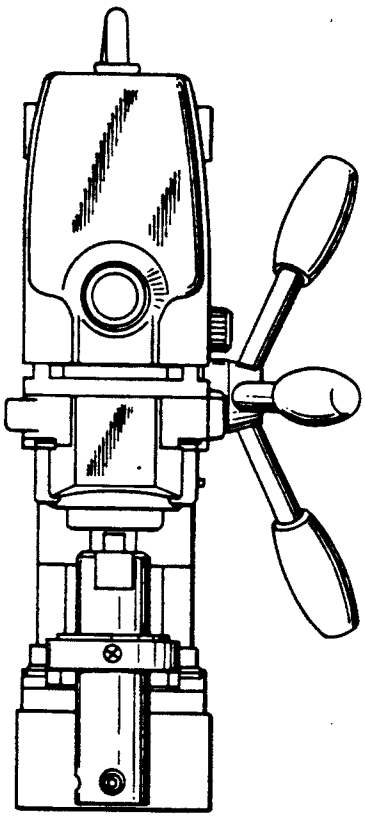

FIG. 5

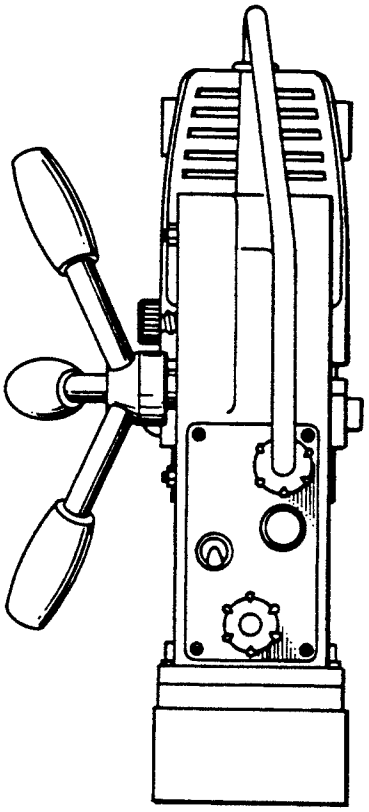

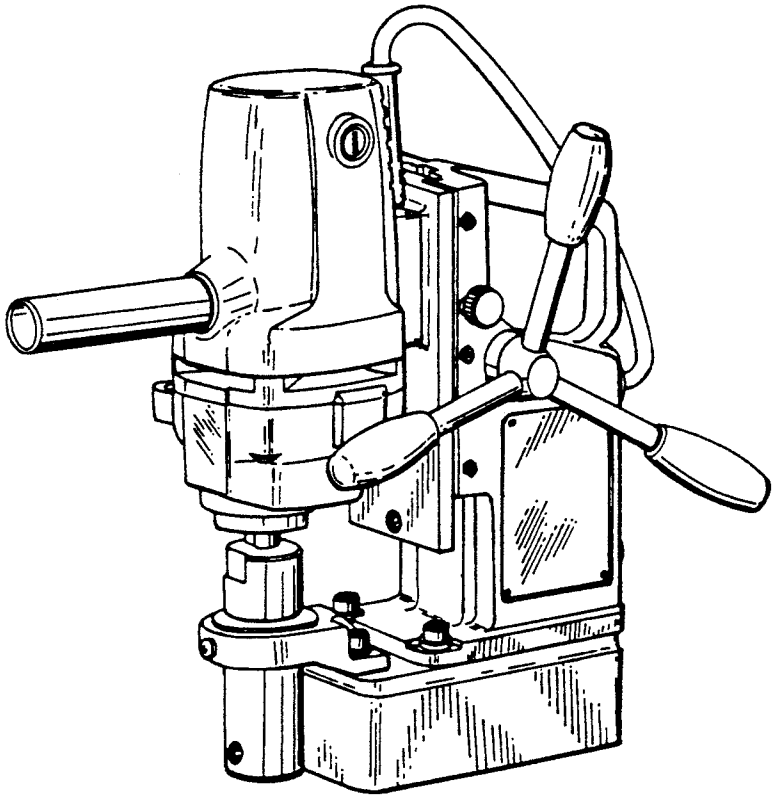

FIG. 7