# United States Patent

**Oates**

[15] **3,693,673**

[45] **Sept. 26, 1972**


[54] **DELIVERY OF FLOWABLE MATERIALS INTO CONTAINERS**


[72] Inventor: **John E. Oates,** 6329 Alamo Avenue, Clayton, Mo. 63105



[22] Filed: **Dec. 18, 1970**

[21] Appl. No.: **99,545**

[52] **U.S. Cl.**.....**141/237,** 141/376
[51] **Int. Cl.**.....**B65b 1/04,** B65b 3/04
[58] **Field of Search**.....141/125, 237, 238–248



[56] **References Cited**

UNITED STATES PATENTS

2,176,613 10/1939 Raygaard.....141/237

FOREIGN PATENTS OR APPLICATIONS

261,899 12/1926 Great Britain.....141/237



*Primary Examiner*—Houston S. Bell, Jr.
*Attorney*—George J. Mager



[57] **ABSTRACT**

Means for quickly delivering predetermined quantities of semiliquid or flowable materials into a large number of similar containers. Particularly advantageous for use in schools, hospitals, cafeterias and the like, especially when numerous meals are to be served in a short time. May be employed in the packing industry as well. Serves to obviate the tedious and time-consuming manual operations of filling conventional paper cups and similar containers one at a time.


**3 Claims, 12 Drawing Figures**

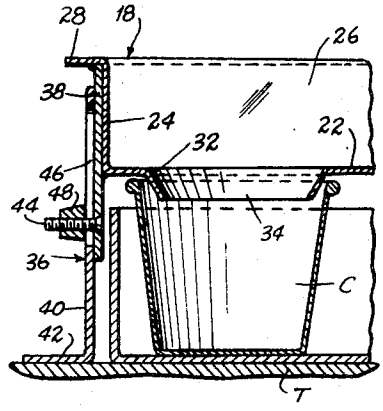

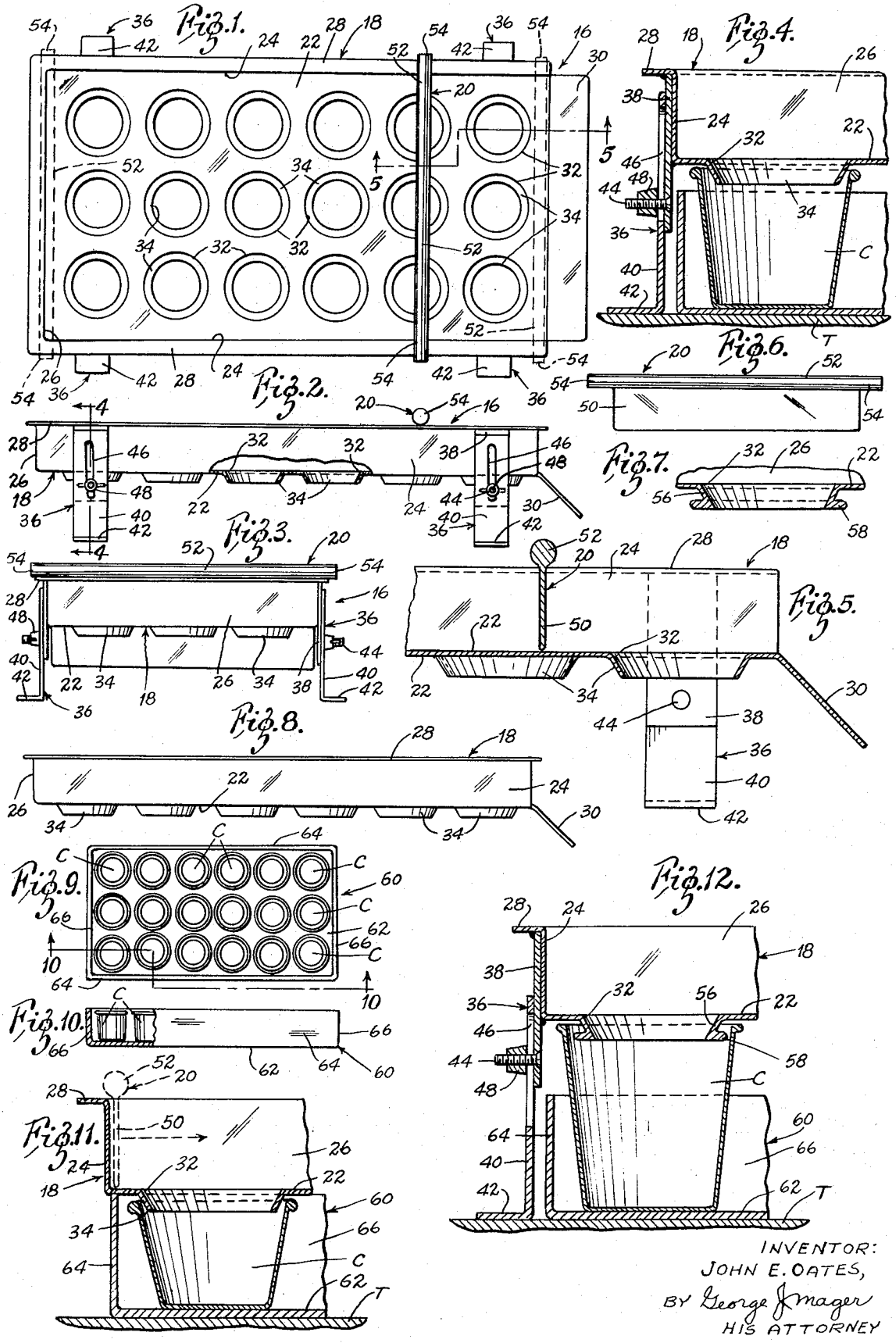


INVENTOR:
JOHN E. OATES,
BY George J. Mager
HIS ATTORNEY

# DELIVERY OF FLOWABLE MATERIALS INTO CONTAINERS

## FIELD OF THE INVENTION

The primary objective of this invention is to provide a filler tray and a cooperative scraper blade adapted in use to deliver determined portions of a batch of flowable material into each of a therebelow positioned plurality of containers. The bottom wall of the tray has formed therein a plurality of filler openings, sized in accordance with the open upper ends of the containers. Each of the openings is surrounded by a depending funnel-shaped or inwardly tapered flange adapted to extend into the open upper end of a container, whereby when the scraper blade is manually drawn across said bottom wall, similar portions of the batch therein are fed into each of the containers.

Preferably, the delivery openings are formed in equally spaced longitudinal and transverse rows, and the containers below would be positioned in approximate alignment therewith. At one end, the bottom wall of the tray terminates in a downwardly inclined slideway or chute that serves to deliver excess materials to a therebelow pan or other container, for reentry into the tray. Waste of materials is thus obviated. Preferably fabricated of stainless steel, the tray and blade may be cleansed quickly after use.

Although primarily advantageous for controlling portions of flowable foods such as salads, cottage cheese, mashed potatoes, creamed corn or spinach, puddings and so on, the invention may obviously also be employed for apportioning cake and muffin batters, cream pie fillings and the like.

## SUMMARY OF THE INVENTION

Currently, at many schools, government-sponsored luncheons are being served to the children. Usually, the meals include one or two items of flowable foods to be served in containers that are placed on each plate, as is understood. Particularly when a great number of children are to be served, the spoon-filling of such containers, one at a time, is a tedious procedure. By employment of the simple means provided by the present invention, a plurality of (for example 18) containers, may each be charged with an approximately identical portion of food in a relatively few seconds.

The invention is illustrated on a sheet of drawings that accompanies this specification. Objects and advantages not specifically noted above, will be apparent or pointed out in the detailed description that will follow with reference to said drawings.

## BRIEF DESCRIPTION OF THE DRAWINGS

FIG. 1 is a top plan view of a typical tray and scraper blade assembly for attaining the objectives of the present invention;

FIG. 2 is a side elevational view partly in section, of FIG. 1;

FIG. 3 is a front elevation of said assembly;

FIG. 4 is an enlarged fragmentary transverse section taken on the line 4—4 of FIG. 2, this view additionally illustrating the tray in use;

FIG. 5 is an enlarged fragmentary longitudinal section taken on the line 5—5 of FIG. 1;

FIG. 6 is an end elevational view of the scraper blade per se;



FIG. 7 is a fragmentary sectional view illustrating a modification;

FIG. 8 is a side elevational view of a modified tray;

FIG. 9 is a reduced top plan view of a conventional shallow open carton charged with a plurality of empty containers;

FIG. 10 is a side elevational view, partly in section, of FIG. 9;

FIG. 11 is an enlarged fragmentary sectional view illustrating use of the FIG. 8 tray; and

FIG. 12 is a view similar to FIG. 4, illustrating the adjustability of the invention and the reason for the modification shown in FIG. 7.

## DESCRIPTION OF PREFERRED EMBODIMENTS

The typical tray and cooperative scraper blade assembly of the invention is generally designated **16**, and includes a rectangular tray **18** and a manually operable scraper blade **20**. The tray **16** is comprised of a bottom wall **22**, opposed side walls **24**, and a front end wall **26**. These walls terminate at the top in a laterally projecting peripheral flange portion **28**. The bottom wall **22** merges into and terminates in a downwardly inclined chute or slideway portion **30**, best seen in FIG. **5**.

Formed in the tray bottom wall is a plurality of delivery openings **32**, each opening merging into a shallow funnel-shaped surrounding flange **34** that depends below said wall. The openings **32** are formed in equally spaced longitudinal and transverse rows as shown.

Leg assemblies **36** are provided adjacent the four corner portions of the tray **18**, whereby said tray may be horizontally positioned at various heights above a supporting surface such as the table top T fragmentarily shown in FIGS. **4** and **12**.

Each of the assemblies **36** includes a support bar **38** rigidly attached to the tray **18**, and a leg bar **40** that terminates in an outwardly extending foot segment **42**. These bars are adjustable relatively to one another by any suitable means, such as a threaded stud **44** secured adjacent the lower end of the bar **38**, an elongated slot **46** in the leg bar **40** through which the stud extends, and a thumbnut **48**.

The blade assembly **20** comprises a rectangular scraper portion **50** that is surmounted by a round rod portion **52**. The width of the blade portion is somewhat less than the distance between the inner surfaces of the side walls **24**, and as best seen in FIG. **5**, the height thereof approximates the distance between the opposed top surfaces of the tray flange portion **28** and the upper surface of the bottom wall **22**. The bar is at least coextensive with the side walls **24**, and preferably as shown in FIGS. **1** and **3**, extends beyond the flange portion **28**, whereby when the scraper is in use, its end portions **54** ride along the opposed top surfaces of said flange portion.

A modified form of funnel-shaped flange **56** surrounding a bottom wall opening **32** is illustrated in FIGS. **7** and **12**. In this construction, the flange **56** terminates in an outwardly extending annular flange portion **58** for a purpose to be described below.

The tray **18** shown in FIGS. **8** and **11** is similar to that shown in FIG. **1** to **5**, but is not equipped with the adjustable leg assemblies **36** for reasons to be explained hereinafter.

In FIGS. **9** and **10**, a typical master tray or carton **60** is shown to include a bottom wall **62**, opposed side

walls **64**, and opposed end walls **66**. Cartons of this character are commercially available in large quantities, are usually of cardboard or plastic and in accordance with prescribed specifications, as is understood.

Thus in the instant case, the cartons **60** would be dimensioned to rather snugly surround and support a plurality of conventional cups or containers C, arranged in a pattern corresponding to that of the delivery openings **32** of a certain tray **18**, as should be clearly understood from an inspection of the drawings.

## PERTINENT OBSERVATIONS

It is to be understood that no claim is made to the cartons **60** nor to the containers C. Such containers are conventional and may be purchased in various prescribed dimensions on the market. The cartons may likewise be made according to specification and purchased in ordered quantities, the container-supporting area of them being dimensioned so as to hold the containers in an appropriate pattern governed by the delivery openings in the tray. The leg assemblies **36** detailed in FIGS. **4** and **12**, may be adjusted to accommodate containers of different heights.

The opposed side portions of the flange **28** serve as slideways for the end portions **54** of the rod **52**, so that in manipulations of the blade assembly **20** from left to right (as viewed in the drawings), the bottom edge of the scraper blade **50** rides along the top surface of the tray bottom wall **22**. Thus, an approximately identical quantity of material will be delivered via each opening **32** to the therebelow container C. Furthermore, the flange **28** provides handle means for raising the tray following completion of a filling operation, and for lowering it into position over another carton **60** of empty containers C.

One of the features of the invention of course, is the fact that, for example in school luncheon programs, a multiplicity of containers C may be quickly processed in advance of meal-serving time. The flange extension **58** shown in FIGS. **7** and **12** is designed primarily for filling containers that are to have lids applied thereto. As should be apparent, each extension **58** serves to provide sufficient unfilled space for entry of the depressed central portion of a conventional lid.

## USE

Although it is believed that the manner of using the invention should be apparent from the foregoing description and an inspection of the drawings, a further brief explanation is given.

Obviously, the batch of flowable material to be apportioned would be deposited into the forward or left hand end area of the tray **18**, with the blade assembly **20** in the dotted line position suggested in FIG. **11**. Thereupon the assembly **20** would be manipulated to the right, as indicated by the broken line arrow, until the blade had passed over all of the delivery openings **32** and onto the upper end of the slideway **30**. Surplus or excess material would gravitate or be scraped into a suitable pan (not shown) resting on the table top T, then redeposited in the tray along with the next batch of material. Should the initially deposited batch of material be of insufficient volume to fill all of the containers, it could quickly be replenished when such condition becomes evident.

With respect to the FIGS. **4** and **12** disposition of the tray in use, it will of course be obvious that each of the four leg assemblies **36** would be adjusted in identical fashion.

With respect to the FIG. **8** disposition of the tray **18** in use, said tray would simply be supported on the upper edge or rim of the carton **60**.

In view of the foregoing description and the drawings, it is believed that a comprehensive presentation of the invention and its features has been given without further elaboration. It should of course be understood that the illustrated structural details may be modified somewhat without departing from the main concepts of the present invention.

What is claimed is:

**1**. In combination with a therebelow positioned carton supporting therein a plurality of similar containers, means for delivering a determined portion of flowable material into each of the containers, said means comprising:

a tray supported above said containers, said tray including a bottom wall, opposed side walls and an end wall;

a plurality of material delivery openings formed in the bottom wall, each opening being in vertical alignment with one of the therebelow containers and merging into a shallow funnel-shaped surrounding flange that depends below said bottom wall;

a downwardly inclined slideway integral therewith formed on the bottom wall at the end thereof opposite said end wall of the tray;

means whereby the disposition of said tray may be varied in accordance with the height of the therebelow containers;

a peripheral flange portion integral therewith projecting laterally from the top of said side walls and said end wall;

and a manually operable blade assembly for propelling a batch of flowable material across the delivery openings from said end wall of the tray to the slideway thereof, said assembly comprising a scraper blade surmounted by a round rod, the opposite ends of said rod being adapted to ride along the top surfaces of the opposed side wall portions of said peripheral flange.

**2**. The combination recited in claim **1**, and an outwardly extending annular flange portion forming the terminal end of each funnel-shaped flange.

**3**. The combination recited in claim **1**, wherein the means whereby the disposition of the tray may be varied in accordance with the height of the therebelow containers comprise four similar adjustable leg assemblies, one assembly being provided adjacent each of the four corner portion of said tray.

* * * * *