(19) Europäisches Patentamt
European Patent Office
Office européen des brevets

(11) EP 0 685 668 B1

(12) **EUROPEAN PATENT SPECIFICATION**

(45) Date of publication and mention of the grant of the patent:
22.03.2000 Bulletin 2000/12

(51) Int Cl.[7]: **F16H 63/42**, F16H 59/10, G05G 1/28

(21) Application number: **95108147.0**

(22) Date of filing: **29.05.1995**

(54) **Lighting device for zigzag-operated shift lever**

Beleuchtungsvorrichtung für einen zich-zach bedienten Schalthebel

Dispositif d'éclairage d'un levier de vitesse actionné en façon zig-zag

(84) Designated Contracting States:
DE GB

(30) Priority: **31.05.1994 JP 11799294**

(43) Date of publication of application:
06.12.1995 Bulletin 1995/49

(73) Proprietor: **KABUSHIKI KAISHA TOKAI-RIKA-DENKI-SEISAKUSHO**
Niwa Aichi-ken (JP)

(72) Inventors:
- **Yoshinobu, Yokoyama**
  Ohaza-Toyota Ohguchi-cho Niwa, Aichi-ken (JP)
- **Kenji, Suzuki**
  Ohaza-Toyota Ohguchi-cho Niwa, Aichi-ken (JP)
- **Yoshiyuki, Seki**
  Ohaza-Toyota Ohguchi-cho Niwa, Aichi-ken (JP)
- **Shouichi, Harada**
  Ohaza-Toyota Ohguchi-cho Niwa, Aichi-ken (JP)
- **Etsuo, Shimizu**
  Toyota-shi, Aichi-ken (JP)

(74) Representative:
Dreiss, Fuhlendorf, Steimle & Becker, Patentanwälte
Postfach 10 37 62
70032 Stuttgart (DE)

(56) References cited:
US-A- 4 137 864
US-A- 4 765 701
US-A- 4 980 803
US-A- 4 991 535
US-A- 5 159 892

- **PATENT ABSTRACTS OF JAPAN vol. 012, no. 339 (P-757), 12 September 1988 & JP 63 098713 A (TOYOTA MOTOR CORP;OTHERS: 01), 30 April 1988,**
- **PATENT ABSTRACTS OF JAPAN vol. 018, no. 408 (M-1647), 29 July 1994 & JP 06 117525 A (TOKAI RIKA CO LTD;OTHERS: 01), 26 April 1994,**
- **PATENT ABSTRACTS OF JAPAN vol. 013, no. 291 (P-893), 6 July 1989 & JP 01 073406 A (TOKAI RIKA CO LTD), 17 March 1989,**
- **: "KRAFTFAHR TECHNISCHES TASCHENBUCH" , , BOSCH, 22. AUFLAGE**

Note: Within nine months from the publication of the mention of the grant of the European patent, any person may give notice to the European Patent Office of opposition to the European patent granted. Notice of opposition shall be filed in a written reasoned statement. It shall not be deemed to have been filed until the opposition fee has been paid. (Art. 99(1) European Patent Convention).

EP 0 685 668 B1

Description

BACKGROUND OF THE INVENTION

Field of the Invention

[0001] The present invention relates to a lighting device for a zigzag-operated shift lever in which the shift lever is shift-operated in accordance with an operation groove having a zigzag pattern.

Description of the Related Art

[0002] Conventionally, a lighting device for a zigzag-operated shift lever in which the shift lever is shift-operated in accordance with an operation groove having a zigzag pattern is disclosed in Japanese Utility Model Publication No. 4-53481, in accordance with the preamble of Claim 1.

[0003] As illustrated in Fig. 4, the lighting device for a zigzag-operated shift lever comprises: a case main body 72 which covers a supporting portion 70A of a shift lever 70; a position indicator plate 80 which is assembled to an upper surface open portion 74 of the case main body 72 and includes an operation groove 76 and a position indicator 78, which indicates a shift position of the shift lever 70 along the operation groove 76; and a light bulb 82 which is disposed within the case main body 72 and discharges light for illumination toward the position indicator plate 80. Further, the position indicator plate 80 is formed by a transparent material to which light from the light bulb 82 can be transmitted. In particular, when the light bulb 82 is lit while a vehicle is traveling at night, the light illuminates an area of the position indicator 78, and further, illuminates the peripheral portion of the operation groove 76 due to the repetitive reflections within the plate 80. Moreover, two light bulbs are used in this example (Japanese Utility Model Publication No. 4-53481).

[0004] However, in this conventional lighting device for the zigzag-operated shift lever, an upper surface of the position indicator plate 80 other than the area of the position indicator 78 is coated so as to be shaded. In a case in which light is absorbed by the coated surface, the reflected light is weakened, and accordingly, the amount of light to the operation groove 76 is decreased. Consequently, when the light bulb 82 is provided at the driver's seat side, the light can hardly reach the side surface 76B of the operation groove 76 at the front passenger's seat side.

[0005] US-A-4,765,701 discloses an illuminator formed of an optically transmissive body, in particular an optical fiber, which bears, at discrete locations along its length, recesses defined by two opposing surfaces which angle inwardly toward each other. Light which impinges upon these surfaces is deflected and will pass out through the opposing side of the body if the corresponding location of this opposing side is transparent. By providing the lower side of a panel with such an illuminator, the upper side of the panel is locally illuminated.

Brief summary of the invention

[0006] With the aforementioned in view, an object of the present invention is to provide a lighting device for a zigzag-operated shift lever, in which an operation groove for the shift lever is provided at a cover of the shift lever device and in which a position indicator, the side surfaces of the operation groove at the driver's seat side and the front passenger's seat side are illuminated.

[0007] The present invention is a lighting device for a zigzag-operated shift lever according to Claim 1.

[0008] In accordance with the present invention, when the lighting means is lit, a portion of the light from the lighting means passes through the upper member and penetrates through the area of the position indicator. As a result, the position indicator is luminously indicated. Because nothing shades the upper surface of the lower member, the remaining portion of the light from the lighting means which passes through the lower member of the indicator plate is reliably reflected by the border between the upper and lower members without being absorbed. The light is also reflected by the lower surface of the lower member. Due to the repetitive reflections, the light is transmitted to the peripheral portion of the operation groove and the peripheral portion of the operation groove is illuminated. As a result, the operation groove is luminously indicated.

[0009] In the lighting device for the zigzag-operated shift lever relating to the present invention, the indicator plate is light-transmissible. The indicator plate has a two-layer structure having an upper member, in which the upper surface other than the area of the position indicator is shaded and the position indicator is illuminated by lighting means, and a lower member, in which the light from the lighting means is transmitted to the peripheral portion of the operation groove at the indicator plate, and the peripheral portion of the operation groove is illuminated. Consequently, a superior effect is achieved in that the position indicator is illuminated at night and that the light easily reaches the side surface of the operation groove at the front passenger's seat side.

BRIEF DESCRIPTION OF THE DRAWINGS

[0010] Fig. 1 is a cross-sectional view, taken along a line I-I of Fig. 2, in which a portion of a hatching is omitted.

[0011] Fig. 2 is a plan view showing a lighting device for a zigzag-operated shift lever relating to an embodiment of the present invention.

[0012] Fig. 3 is a perspective view which, seen from the diagonally rearward direction of a vehicle, shows the lighting device for the zigzag-operated shift lever relating to one embodiment of the present invention.

[0013] Fig. 4 is a cross-sectional view which corre-

sponds to Fig. 1 and shows a lighting device for a zigzag-operated shift lever relating to a conventional example.

DETAILED DESCRIPTION OF THE PREFERRED EMBODIMENTS

[0014] An embodiment of a lighting device for a zigzag-operated shift lever of the present invention will be described in accordance with Figs. 1 through 3. Note that arrow FR shows a forward direction of a vehicle; arrow D shows a direction of a driver in a transverse direction of the vehicle (position indicator side); and arrow UP shows an upward direction of the vehicle.

[0015] As illustrated in Fig. 3, a supporting portion of a shift lever 10 is covered with a case main body 12. A lower surface of the case main body 12 and a portion of the upper surface thereof are opened, and the case main body 12 is formed in the shape of a box. An indicator plate 14 is assembled to the open portion of the upper surface of the case main body 12.

[0016] As illustrated in Fig. 2, a step-shaped (zigzag patterned) operation groove 16 is formed at the indicator plate 14. The shift lever 10 is inserted through the operation groove 16. The shift lever 10 is shift-operated in the longitudinal direction of the vehicle (the direction of arrow A in Fig. 2) in accordance with the operation groove 16.

[0017] A position indicator 18 is formed at the upper surface of the indicator plate 14 along the operation groove 16. Indications of the respective positions (P, R, N, D-3, D-2, L) are provided at the position indicator 18 so as to correspond to the respective shift positions of the shift lever 10. Further, the indicator plate 14 has a guide groove 16A, which extends from the area of P (parking) position (i.e., the position of the shift lever 10 in Fig. 2) of the operation groove 16 to the driver's seat side (i.e., the direction of arrow D).

[0018] At the under side of the indicator plate 14, a slide cover 20 is disposed at an area which opposes the operation groove 16. The well-known slide cover 20 interlocks shift operation of the shift lever 10 and slides in the direction of arrow A in Fig. 2. Even if the shift lever 10 is operated to any of the shift positions, the operation groove 16 is kept in a covered state and the entering of dust into the case main body 12 is prevented.

[0019] As illustrated in Fig. 1, the indicator plate 14 has a two-layer structure having a character plate 22, which serves as an upper member forming an upper surface portion, and a light-transmissible plate 24, which serves as a lower member forming a lower surface portion. An air layer is interposed at a border 23 between the character plate 22 and the light-transmissible plate 24.

[0020] The character plate 22 is formed by a light-transmissible material, e.g., a transparent glass, transparent resin or the like. In the present embodiment, the character plate 22 is formed by a transparent acrylic resin. Further, the outer peripheral portion of the character plate 22 includes areas 22A serving as side wall portions of the operation groove 16, and the outer peripheral portion thereof other than the area of the position indicator 18 is coated by a coating 26.

[0021] The light-transmissible plate 24 is formed by a light-transmissible material, e.g., a transparent glass, transparent resin or the like. In the present embodiment, the light-transmissible plate 24 is formed by a transparent acrylic resin.

[0022] As illustrated in Fig. 2, a lamp housing 30, which is rectangular when viewed planarly and integrates a light bulb 28 as lighting means, is formed at the front end portion of the light-transmissible plate 24 at the driver's seat side.

[0023] As shown in Fig. 1, the lamp housing 30 is integrally formed with the light-transmissible plate 24. One light bulb 28 is upwardly attached to the bottom portion of a concave portion 30A which is opened upwardly.

[0024] As illustrated in Fig. 2, reflecting surfaces 32, 34, and 36 are respectively formed at three corners of the four corners of the light-transmissible plate 24 (a reflecting surface is not formed at a corner at which the lamp housing 30 is provided). Moreover, an elongated light-transmissible portion 40 is integrally formed with the front end edge portion of the light-transmissible plate 24, and an elongated light-transmissible portion 42 is integrally formed with the edge portion thereof at the driver's seat side. One end portion of each of the light-transmissible portions 40 and 42 is connected to the lamp housing 30.

[0025] As shown in Fig. 1, a portion of the light-transmissible portion 40 projects toward the lower side of the light-transmissible plate 24. The thickness of the light-transmissible portion 40 gradually decreases from a lamp housing side end portion 40A to a reflecting surface side end portion 40B. As a result, the light from the lamp housing side end portion 40A incident on the light-transmissible portion 40 is converged to the reflecting surface side end portion 40B and incident on the reflecting surface 32.

[0026] Similarly, as illustrated in Fig. 2, the light from a lamp housing side end portion 42A and incident on the light-transmissible portion 42 is converged to the reflecting surface side end portion 42B and incident on the reflecting surface 36. Moreover, the light reflected by the reflecting surface 36 is incident on the reflecting surface 34.

[0027] The end surface of the light-transmissible plate 24 at the front passenger's seat side (side opposite to the position indicator 18) is a diffusing surface 44. The light from the reflecting surfaces 32 and 34 is diffused over the entire area within the light-transmissible plate 24.

[0028] Next, the operation of the present embodiment will be explained.

[0029] In the lighting device for the zigzag-operated shift lever of the present embodiment, when the light

bulb 28 is lit, a portion of the light from the light bulb 28 (arrow W1 in Figs. 1 and 2) passes through the light-transmissible plate 24 and the character plate 22 of the indicator plate 14 and penetrates through the area of the position indicator 18. Another portion of the light from the light bulb 28 (arrow W2 in Figs. 1 and 2) is made to be arrow W2-b in Fig. 1 by a diffusing surface 44-b, which is formed on the surface of the light-transmissible plate 24 for every characters, and penetrates through the area of the position indicator 18. Accordingly, the position indicator 18 is illuminated and thereby luminously indicated.

[0030] Further, a portion of the light from the light bulb 28, which passes through the light-transmissible plate 24 of the indicator plate 14 (arrow W2 in Figs. 1 and 2), penetrates through the wall portion 24A which becomes the side surface of the operation groove 16 at the driver's seat side. Accordingly, the side surface of the operation groove 16 at the driver's seat side is illuminated.

[0031] In addition, unlike the conventional structure, since the upper surface of the light-transmissible plate 24 is not coated so as to be shaded, a portion of the light from the light bulb 28, which passes through the light-transmissible plate 24 of the indicator plate 24 (arrow W3 in Figs. 1 and 2), is reliably reflected by the border 23 between the character plate 22 and the light-transmissible plate 24 and by a lower surface 24B of the light-transmissible plate 24 without being absorbed. Due to the repetitive reflections, the portion of the light is converged within the light-transmissible plate 24 and is incident on the reflecting surface 32.

[0032] As illustrated in Fig. 2, the light which is reflected by the reflecting surface 32 (arrow W3 in Fig. 2) is diffused by the diffusing surface 44 so as to be diffused over the entire area of the light-transmissible plate 24. Then, the light penetrates through a wall portion 24C serving as the side surface of the operation groove 16 at the front passenger's seat side so that the side surface of the operation groove 16 at the front passenger's seat side is illuminated.

[0033] Similarly, a portion of the light from the light bulb 28, which passes through the light-transmissible portion 42 of the light-transmissible plate 24 of the indicator plate 14 (arrow W4 in Fig. 2), is reflected by the reflecting surfaces 36 and 34. Then, the light is diffused by the diffusing surface 44 so as to be diffused over the entire area of the light-transmissible plate 24. Thereafter, the light penetrates through the wall portion 24C serving as the side surface of the operation groove 16 at the front passenger's seat side so that the side surface of the operation groove 16 at the front passenger's seat side is illuminated.

[0034] Accordingly, the side surfaces of the operation groove 16 at the driver's seat side and the front passenger's seat side are luminously indicated.

[0035] In the present embodiment, the air layer is interposed at the border 23 between the character plate 22 and the light-transmissible plate 24 so that the portion of the light from the light bulb 28 is reflected by the border 23. However, instead of this structure, a structure may be provided in which the portion of the light from the light bulb 28 is reflected by the border 23 by adhering the character plate 22 to the light-transmissible plate 24 and by changing the refractive indices of the character plate 22 and the light-transmissible plate 24.

[0036] As described above, a specific embodiment of the present invention is described in detail. However, it is understood by those skilled in the art that the present invention is not limited to such embodiment. For example, in the above-described embodiment, the light bulb is used as lighting means, however, instead of the light bulb, a discharge tube, a light-emitting diode or the like may be used.

Claims

1. A lighting device for a zigzag-operated shift lever in which the shift lever (10), which is pivotably operated in two orthogonal directions, is shift-operated in accordance with a step-shaped operation groove (16), comprising:

a case main body (12) which covers a supporting portion of said shift lever (10);

an indicator plate (14) which is assembled to an upper surface open portion of said case main body (12), said indicator plate including said operation groove (16) and a position indicator (18) which indicates a shift position of said shift lever (10) along the operation groove (16);

a lighting means (28) which is disposed within the case main body (12) and discharges light for illumination toward said position indicator (18) and the peripheral portion of said operation groove (16);

characterized in that

the lighting means (28) is disposed at a corner portion of said case main body (12) at said position indicator (18) side,

reflecting means (32, 34 and 36) are disposed at corner portions, other than the corner portion at which said lighting means (28) is disposed, of said case main body (12), said reflecting means (32, 34 and 36) reflecting the light from said lighting means (28),

wherein said indicator plate (14) is light-transmissible and has a two-layer structure, said indicator plate has an upper member (22), in which the upper surface other than the area of

said position indicator (18) is shaded and said position indicator (18) is illuminated by said lighting means (28), and a lower member (24), in which the light from said lighting means (28) is transmitted by internal reflection to the peripheral portion of the operation groove (16) at said indicator plate (14) so that the peripheral portion of the operation groove (16) is illuminated.

2. A lighting device for a zigzag-operated shift lever according to claim 1, wherein said lower member (24) has said reflecting means.

3. A lighting device for a zigzag-operated shift lever according to claim 1, wherein the side surface of said lower member (24) at the side opposite to said position indicator (18) within said case main body (12) is a diffusing surface (44) so as to illuminate continuously said peripheral portion of said operation groove (16).

4. A lighting device for a zigzag-operated shift lever according to claim 2, wherein the side surface of said lower member (24) at the side opposite to said position indicator (18) within said case main body (12) is a diffusing surface (44) so as to illuminate continuously said peripheral portion of said operation groove (16).

5. A lighting device for a zigzag-operated shift lever according to claim 1, wherein said lighting means (28) includes a housing portion (30) for integrating said lighting means.

6. A lighting device for a zigzag-operated shift lever according to claim 5, wherein said housing portion (30) is integrally formed with said lower member (24).

7. A lighting device for a zigzag-operated shift lever according to claim 1, wherein a portion of said lower member (24) includes a diffusing surface (44b) so as to illuminate said position indicator.

8. A lighting device for a zigzag-operated shift lever according to claim 1, wherein an air layer is provided between said upper member (22) and said lower member (24).

9. A lighting device for a zigzag-operated shift lever according to claim 1, wherein said upper member (22) is adhered to said lower member (24) and the refractive indices of said upper and lower members are different.

Patentansprüche

1. Beleuchtungsvorrichtung für einen Zickzack bedienten Schalthebel, bei dem ein Schalthebel (10), der in zwei orthogonalen Richtungen gelenkig betätigbar ist, durch Schieben entsprechend einer in Stufen ausgeformten Schaltkulisse (16) betätigt wird, mit:

einem kastenförmigen Hauptkörper (12), der einen Unterstützungsabschnitt des Schalthebels (10) abdeckt;

einer Anzeigeplatte (14), die an einem oberen offenen Flächenabschnitt des kastenförmigen Hauptkörpers (12) angebracht ist, die Anzeigeplatte (14) die Schaltkulisse (16) und einen Positionsanzeiger (18) aufweist, der eine Position des Schalthebels (16) entlang der Schaltkulisse (16) anzeigt;

einem Leuchtmittel (28), das innerhalb des kastenförmigen Hauptkörpers (12) angeordnet ist und Licht zum Erhellen des Positionsanzeigers (18) und des Außenbereiches der Schaltkulisse (16) aussendet;

dadurch gekennzeichnet, daß

das Leuchtmittel (28) in einem Eckbereich des kastenförmigen Hauptkörpers (12) auf der Seite des Positionsanzeigers (18) angeordnet ist,

reflektierende Mittel (32, 34, 36) in anderen Eckbereichen des kastenförmigen Hauptkörpers (12) angeordnet sind, als in dem Eckbereich, in dem das Leuchtmittel (28) angeordnet ist, wobei die reflektierenden Mittel (32, 34 und 36) das Licht des Leuchtmittels (28) reflektieren,

wobei die Anzeigeplatte (14) lichtdurchlässig ausgebildet ist und eine Zweilagenstruktur aufweist, die Anzeigeplatte (14) ein oberes Teil (22) aufweist, bei dem die obere Oberfläche außer dem Bereich des Positionsanzeigers (18), abgeschattet ist und der Positionsanzeiger (18) durch das Leuchtmittel (28) beleuchtet ist, und ein unteres Teil (24), bei dem das Licht von dem Leuchtmittel (28) durch interne Reflexionen hin zu dem Außenbereich der Schaltkulisse (16) an der Anzeigeplatte (14) übertragen wird, so daß der Außenbereich der Schaltkulisse (16) beleuchtet ist.

2. Beleuchtungsvorrichtung für einen im Zickzack betriebenen Schalthebel nach Anspruch 1, wobei der untere Teil (24) die reflektierenden Mittel aufweist.

3. Beleuchtungsvorrichtung für einen im Zickzack betriebenen Schalthebel nach Anspruch 1, wobei die seitliche Fläche des unteren Teils (24) an der dem Positionsanzeiger (18) gegenüberliegenden Seite innerhalb des kastenförmigen Hauptkörpers (12) eine streuende Oberfläche (44) aufweist, um den Außenbereich der Schaltkulisse (16) kontinuierlich zu erhellen.

4. Beleuchtungsvorrichtung für einen im Zickzack betriebenen Schalthebel nach Anspruch 2, wobei die seitliche Fläche des unteren Teils (24) an der Seite gegenüberliegend zu dem Positionsanzeiger (18) innerhalb des kastenförmigen Hauptkörpers (12) als streuende Oberfläche (44) ausgebildet ist, um den Außenbereich der Schaltkulisse (16) kontinuierlich zu erhellen.

5. Beleuchtungsvorrichtung für einen im Zickzack betriebenen Schalthebel nach Anspruch 1, wobei das Leuchtmittel (28) einen Gehäuseabschnitt (30) zur Integration des Leuchtmittels aufweist.

6. Beleuchtungsvorrichtung für einen im Zickzack betriebenen Schalthebel nach Anspruch 5, wobei der Gehäuseabschnitt (30) einstückig mit dem unteren Teil (24) ausgeformt ist.

7. Beleuchtungsvorrichtung für einen im Zickzack betriebenen Schalthebel nach Anspruch 1, wobei ein Abschnitt des unteren Teils (24) eine streuende Oberfläche (44b) aufweist, um den Positionsanzeiger (18) zu beleuchten.

8. Beleuchtungsvorrichtung für einen im Zickzack betriebenen Schalthebel nach Anspruch 1, wobei eine Luftschicht zwischen dem oberen Teil (22) und dem unteren Teil (24) vorgesehen ist.

9. Beleuchtungsvorrichtung für einen im Zickzack betriebenen Schalthebel nach Anspruch 1, wobei der obere Teil (22) mit dem unteren Teil (24) direkt zusammengefügt ist und sich die Brechungsindices des oberen und der unteren Teils unterscheiden.

Revendications

1. Dispositif d'éclairage pour un levier de changement de vitesse actionné en zig-zag, dans lequel le levier de changement de vitesse (10), qui est actionné à pivotement dans deux directions orthogonales, est déplacé en suivant une rainure d'actionnement (16) en forme d'escalier, comprenant

   un corps principal de boîtier (12) qui recouvre une partie de support dudit levier de changement de vitesse (10) ;

   une plaque à indicateur (14), qui est réunie à une partie de surface supérieure ouverte dudit corps principal (12) du boîtier, ladite plaque à indicateur incluant ladite rainure d'actionnement (16) et un indicateur de position (18), qui indique une position de décalage dudit levier de changement de vitesse (10) le long de la rainure d'actionnement (16);
   des moyens d'éclairage (28) qui sont disposés à l'intérieur du corps principal (12) du boîtier et délivrent une lumière servant à éclairer ledit indicateur de position (18) et la partie périphérique de ladite rainure d'actionnement (16);

   caractérisé en ce que

   les moyens d'éclairage (28) sont disposés au niveau d'une partie d'angle dudit corps principal (12) du boîtier sur le côté dudit indicateur de position (18),
   des moyens réfléchissants (32,34 et 36) sont disposés dans des parties d'angle autres que la partie d'angle, au niveau de laquelle lesdits moyens d'éclairage (28) sont disposés, du corps principal (12) du boîtier, lesdits moyens réfléchissants (32,34 et 36) réfléchissant la lumière produite par lesdits moyens d'éclairage (28),
   dans lequel ladite plaque à indicateur (14) est transparente et possède une structure formée de deux couches, ladite plaque à indicateur possède un élément supérieur (22), dans lequel la surface supérieure autre que la surface dudit indicateur de position (18) est masquée, et ledit indicateur de position (18) est éclairé par lesdits moyens d'éclairage (28), et un élément inférieur (24), dans lequel la lumière provenant desdits moyens d'éclairage (26) est transmise par réflexion interne en direction de la partie périphérique de la rainure d'actionnement (16) présente dans ladite plaque à indicateur (14) de sorte que la partie périphérique de la rainure d'actionnement (16) est éclairée.

2. Dispositif d'éclairage pour un levier de changement de vitesse actionné en zig-zag selon la revendication 1, dans lequel ledit élément inférieur (24) comporte lesdits moyens réfléchissants.

3. Dispositif d'éclairage pour un levier de changement de vitesse actionné en zig-zag selon la revendication 1, dans lequel la surface latérale dudit élément inférieur (24) sur le côté situé à l'opposé dudit indicateur de position (18) dans ledit corps principal (12) du boîtier est une surface diffusante (44) servant à éclairer en permanence ladite partie périphérique de ladite rainure d'actionnement (16).

4. Dispositif d'éclairage pour un levier de changement de vitesse actionné en zig-zag selon la revendication 2, dans lequel la surface latérale dudit élément inférieur (24) sur le côté situé à l'opposé dudit indicateur de position (18) à l'intérieur dudit corps principal (12) du boîtier est une surface diffusante (44) servant à éclairer en permanence ladite partie périphérique de ladite rainure d'actionnement (16).

5. Dispositif d'éclairage pour un levier de changement de vitesse actionné en zig-zag selon la revendication 1, dans lequel lesdits moyens d'éclairage (28) comprennent une partie formant logement (30) pour l'intégration desdits moyens d'éclairage.

6. Dispositif d'éclairage pour un levier de changement de vitesse actionné en zig-zag selon la revendication 5, dans lequel ladite partie formant logement (30) est formée d'un seul tenant avec ledit élément inférieur (24).

7. Dispositif d'éclairage pour un levier de changement de vitesse actionné en zig-zag selon la revendication 1, dans lequel une partie dudit élément inférieur (24) inclut une surface diffusante (44b) servant à éclairer ledit indicateur de position.

8. Dispositif d'éclairage pour un levier de changement de vitesse actionné en zig-zag selon la revendication 1, dans lequel ladite couche est prévue entre ledit élément supérieur (22) et ledit élément inférieur (24).

9. Dispositif d'éclairage pour un levier de changement de vitesse actionné en zig-zag selon la revendication 1, dans lequel ledit élément supérieur (22) est fixé par adhérence audit élément inférieur (24) et les indices de réfraction desdits éléments supérieur et inférieur sont différents.

FIG. 1

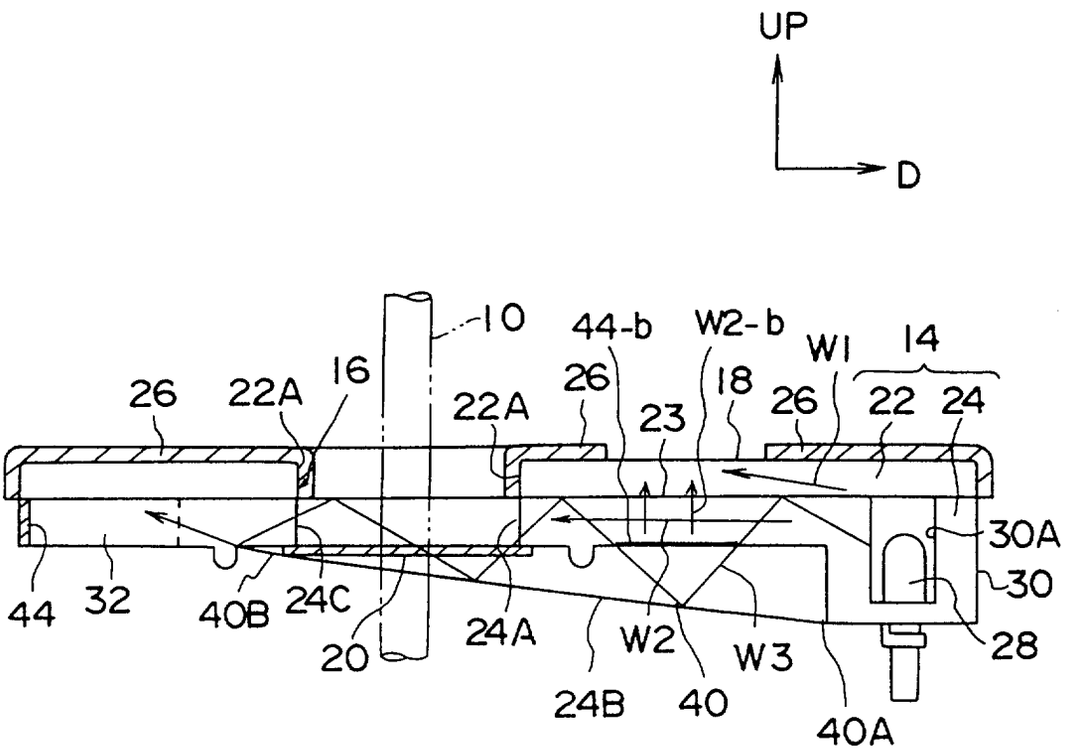
UP
D
10
44-b
W2-b
W1
14
26
22A
16
22A
26
18
26
22
24
23
30A
30
28
44
32
40B
24C
20
24A
W2
W3
24B
40
40A

FIG. 2

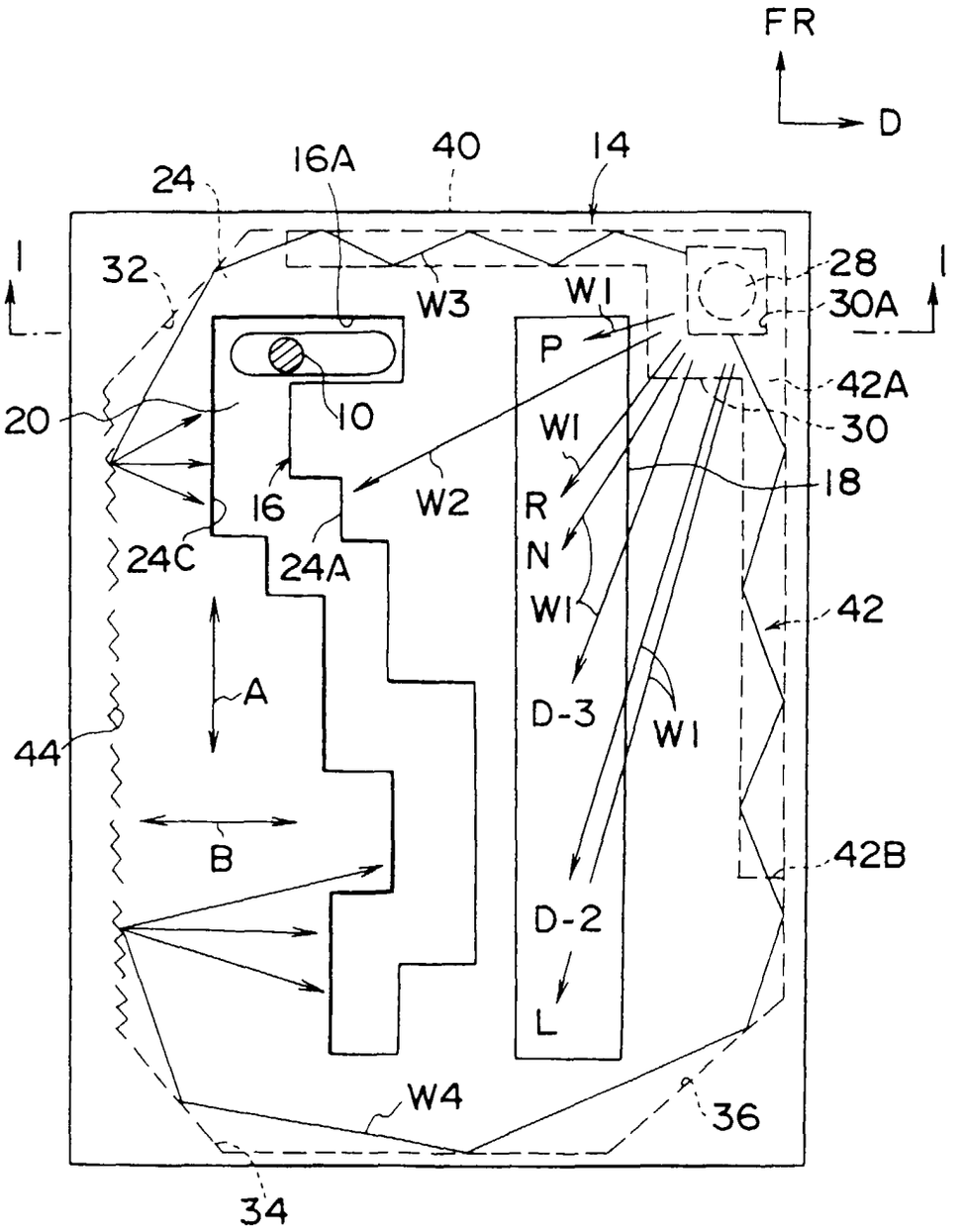
FR
D
24
16A
40
14
I
32
W3
W1
28
30A
I
P
42A
20
10
30
W1
18
16
W2
R
N
24C
24A
W1
42
A
D-3
W1
44
B
42B
D-2
L
W4
36
34

FIG. 3

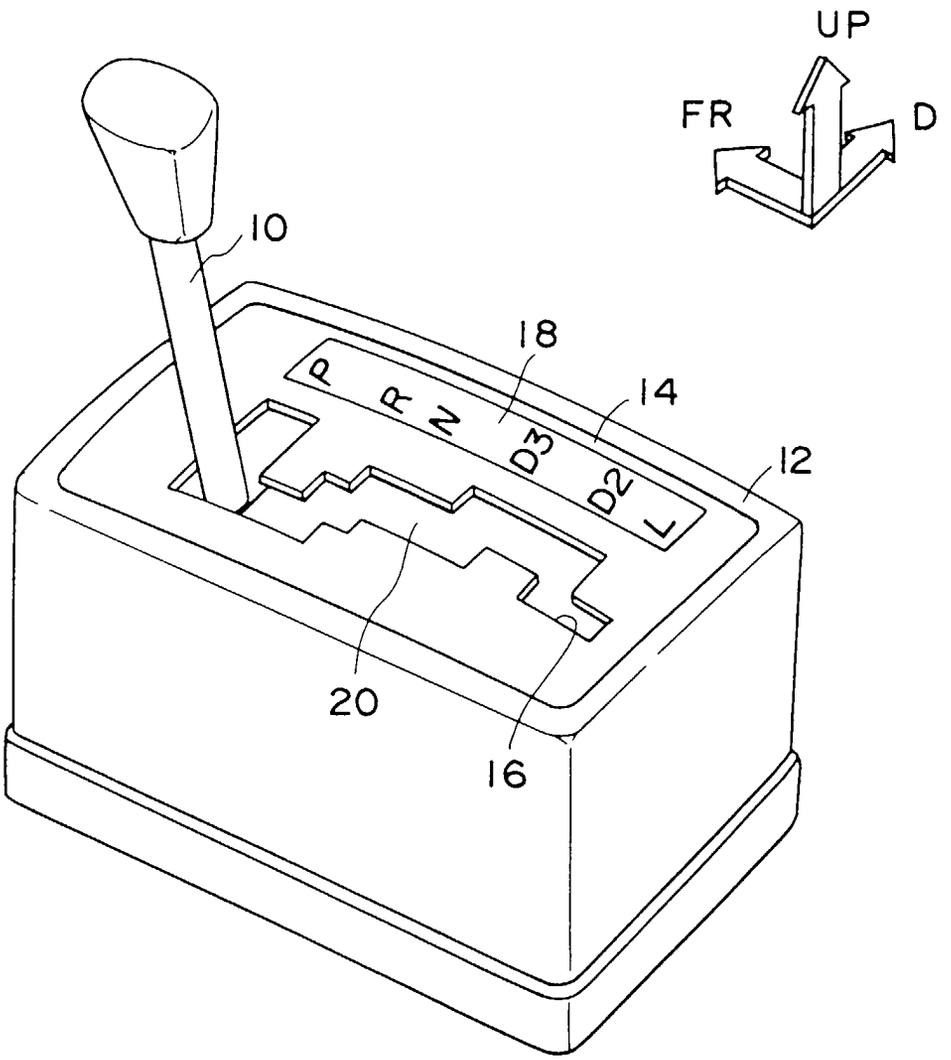

FIG. 4

PRIOR ART

