US 20050178677A1

(19) United States

(12) Patent Application Publication

(10) Pub. No.: US 2005/0178677 A1

(43) Pub. Date: Aug. 18, 2005

Morrow

(54) CONTAINER ASSEMBLY HAVING AN OVERCAP WITH A STORAGE COMPARTMENT

(75) Inventor: J. Mark Morrow, Camden, SC (US)

Correspondence Address:
ALSTON & BIRD LLP
BANK OF AMERICA PLAZA
101 SOUTH TRYON STREET, SUITE 4000
CHARLOTTE, NC 28280-4000 (US)

(73) Assignee: Sonoco Development, Inc.

(21) Appl. No.: 10/780,401

(22) Filed: Feb. 16, 2004

Publication Classification

(51) Int. Cl.[7] ..... B65D 25/08

(52) U.S. Cl. ..... 206/219

(57) ABSTRACT

There is provided an overcap that includes a storage compartment for receiving a product to be mixed with a hot liquid. The overcap includes a top wall defining the storage compartment in an underside of the top wall surrounded by an annular portion. The overcap includes an aperture in the annular portion. The overcap also includes a skirt extending downward from a rim surrounding the annular portion. The skirt extends below a lowermost surface of the top wall and can define a grip surface which a consumer may use to hold the container assembly, such that the grip surface insulates against heat if a hot liquid is held in the container. The storage compartment is sealed with a membrane that is relatively impermeable to moisture. In addition, the skirt includes a plurality of spacers on the inside surface of the skirt that are circumferentially spaced apart and that extend downwardly from the rim of the overcap.

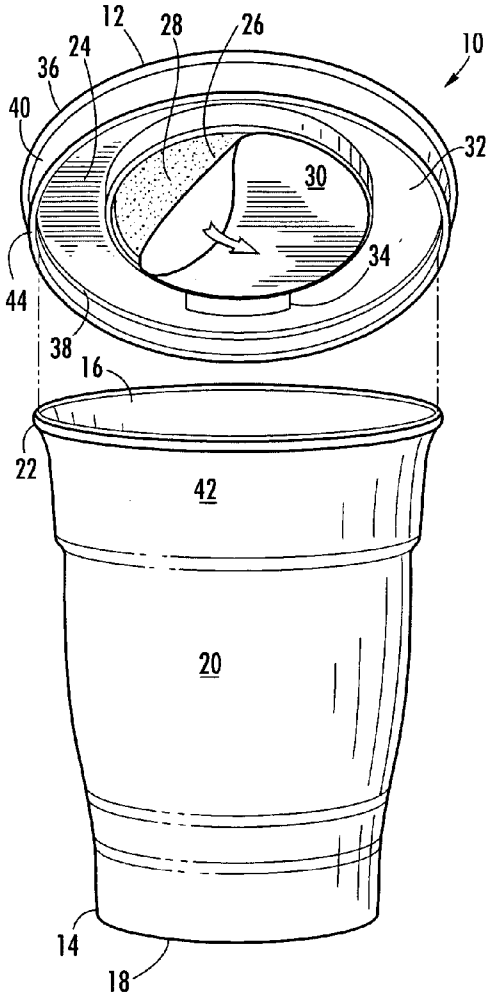

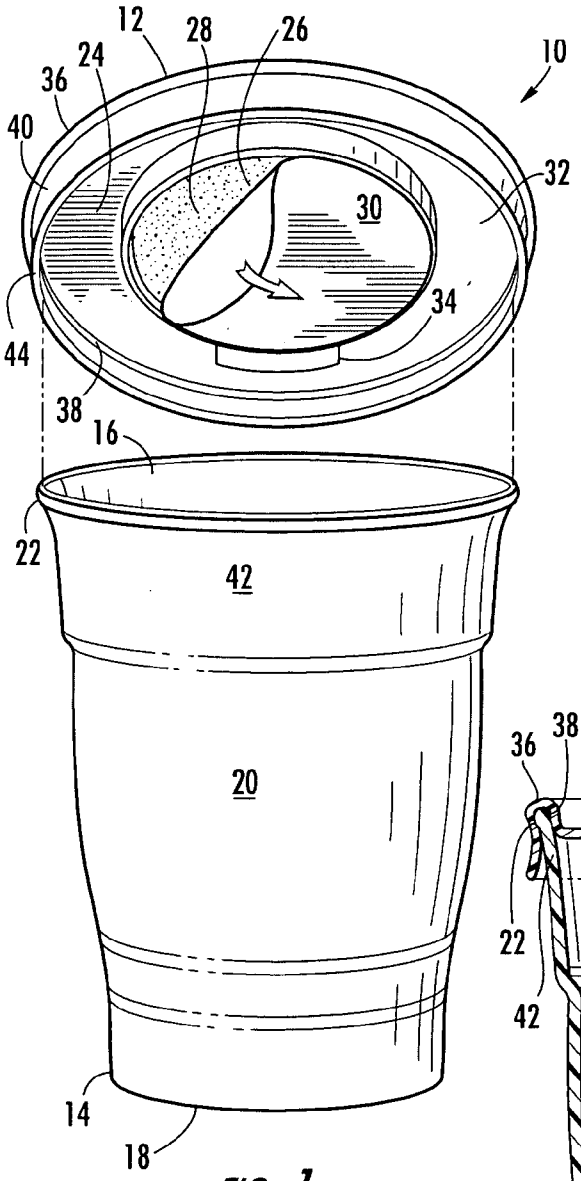
12
28
26
24
36
10
40
32
30
34
44
38
16
22
42
20
14
18

FIG. 1.

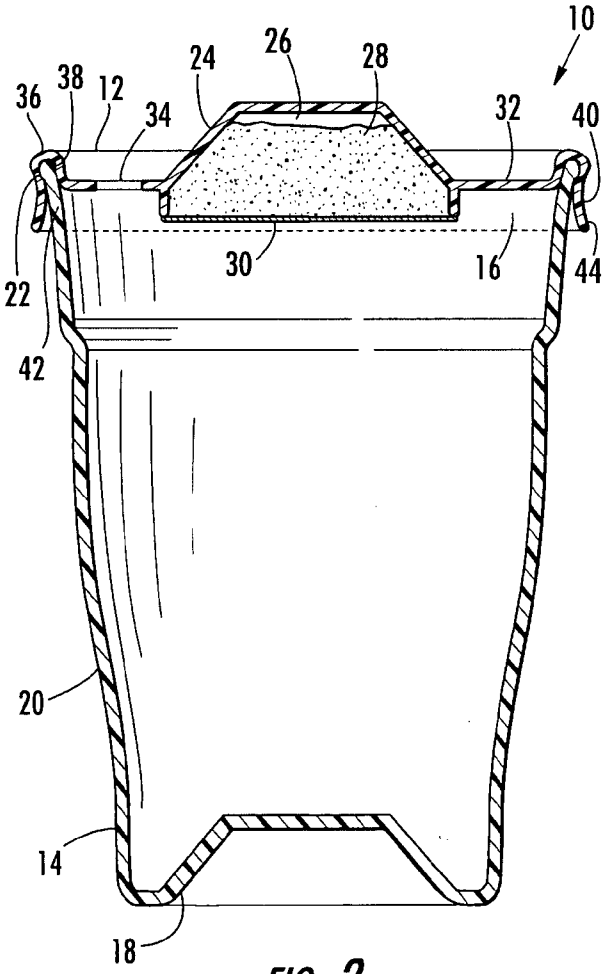
10
24
26
28
36
38
12
34
32
40
30
16
44
22
42
20
14
18

FIG. 2.

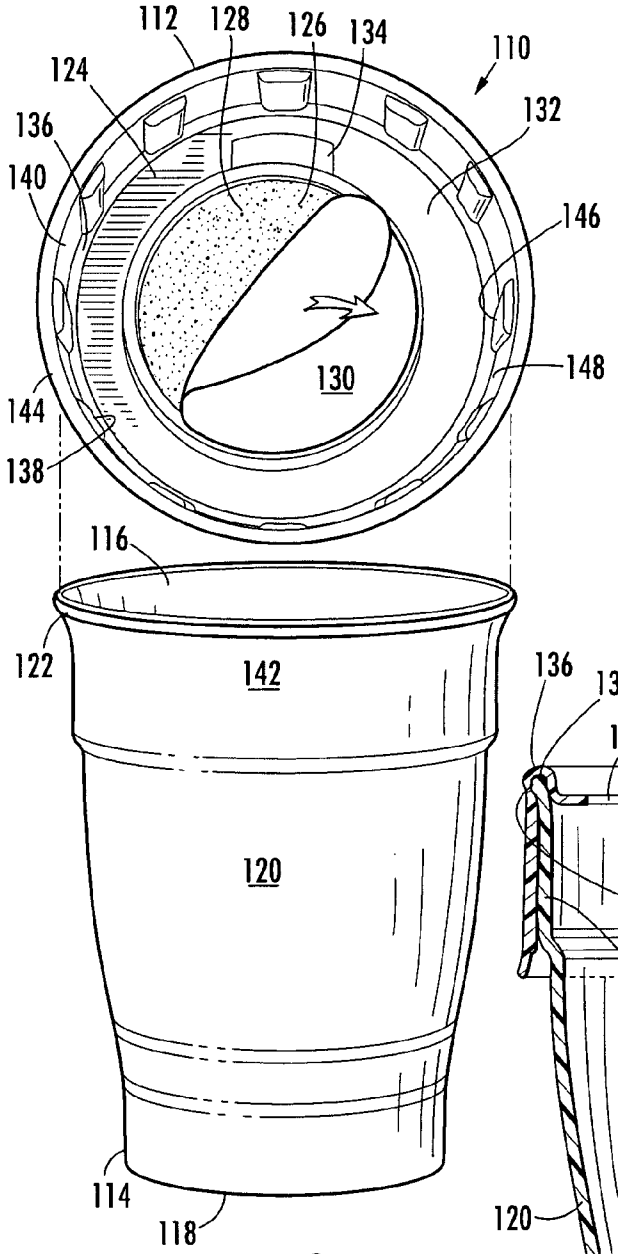
112
128
126
134
110
124
132
136
140
146
130
148
144
138
116
122
142
120
114
118

FIG. 3.

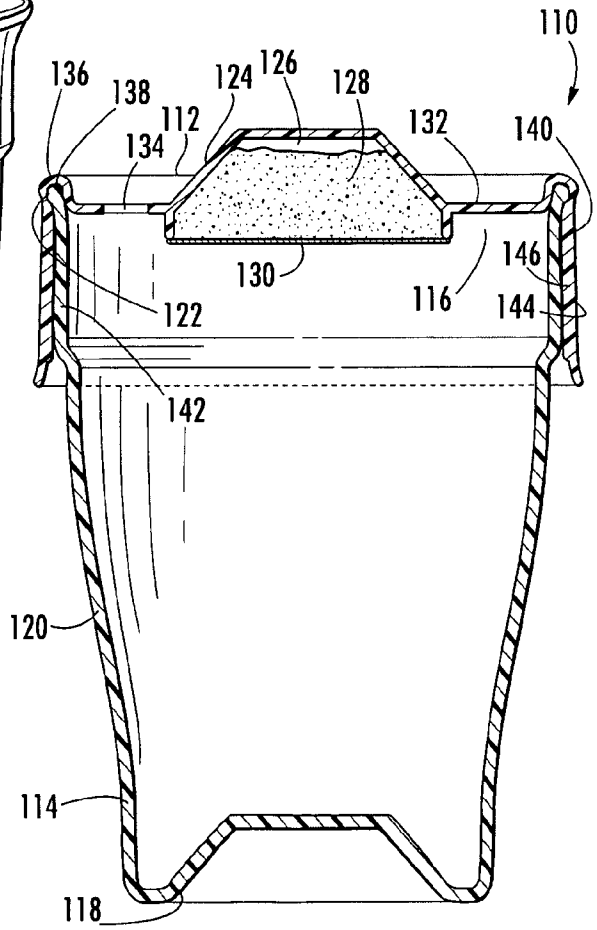
110
136
138
124
126
128
112
134
132
140
130
146
116
144
122
142
120
114
118

FIG. 4.

# CONTAINER ASSEMBLY HAVING AN OVERCAP WITH A STORAGE COMPARTMENT

## BACKGROUND OF THE INVENTION

[0001] 1. Field of the Invention

[0002] The present invention is related to overcaps for container assemblies, and more particularly, overcaps having a recessed storage compartment for storing of a product.

[0003] 2. Description of Related Art

[0004] Convenience is a major factor in designing containers, such as cups, for holding consumable liquids, especially "travel" containers intended for easy transport without spillage of the liquid. To this end, such containers often have a lid, or overcap, affixed to the container so as to limit escape of the liquids due to changes in container orientation. Another problem with dispensing consumable liquids in containers is that the consumer often wishes to add various products to the liquid, such as sugar or powdered cream to coffee. However, such products are typically distributed in small, individual packages that are not easily located or opened to dispense their contents into the liquid.

[0005] The container lid may be configured to store products that will be subsequently mixed with a liquid. U.S. Pat. No. 3,326,363 to Bennett et al. ("Bennett") discloses a container lid with a plurality of integrally-formed, hollow pockets to hold products such as sugar, powdered cream, or soft-drink concentrate. A sealing member seals the product inside the pockets, and the sealing member may be easily torn or removed to provide access to the product. The Bennett patent, and similar lids with hollow pockets, do not provide an aperture for convenient access to the liquid or product within the container, thus requiring the consumer to remove the lid to gain access to the liquid.

[0006] Containers for consumable liquids, particularly hot liquids, often include a sleeve to insulate against the heat from the hot liquid in the container. U.S. Pat. No. 5,765,716 to Cai et al. discloses a lid integrally formed with a sleeve that insulates the wall of the container. The sleeve is tethered to the lid and is configured to slidably receive the container. Connection of the lid to the container may be difficult for consumers because the container must first be inserted into the sleeve and then the tethered lid must be rotated to attach the lid to the open upper end.

[0007] A need exists for a container lid or overcap that provides convenient access to liquids and includes a storage compartment for a product to be mixed with the liquid. A need also exists for a lid that is easily attached to a container and that provides a grip surface that insulates against heat from a hot liquid.

## BRIEF SUMMARY OF THE INVENTION

[0008] The invention addresses the above needs and achieves other advantages by providing an overcap for a container, wherein the overcap can store a product for mixing with a liquid held in the container. The overcap includes a rim configured to engage the container and a top wall that defines a storage compartment in an underside of the top wall. The top wall also includes a substantially horizontal annular portion radially inward of the rim and surrounding the storage compartment. The overcap also has a membrane removably attached to the underside of the top wall of the overcap covering the storage compartment for sealing a product in the storage compartment. The overcap may also be made of a multi-layer polymer material to provide oxygen and moisture protection. A drinking aperture is defined in the annular portion to provide convenient access to liquids that may be held in the container.

[0009] The overcap of further embodiments includes a skirt extending downwardly from the rim and includes a grip surface defined on the skirt. The skirt may include a plurality of spacers along an inner surface of the skirt, and the spacers may be circumferentially spaced apart from each other and extend downwardly from the rim of the overcap. The grip surface can be held by the consumer to support the container assembly when a hot liquid is held in the container. In addition, the spacers of the skirt insulate against heat from the hot liquid by spacing the skirt from the container wall.

[0010] Likewise, another embodiment of the present invention provides an overcap for a container, wherein the overcap includes a rim configured to engage the container and a top wall that defines a storage compartment in an underside of the top wall. The top wall also includes a substantially horizontal annular portion radially inward of the rim and surrounding the storage compartment. The overcap also has a membrane removably attached to the underside of the top wall of the overcap covering the storage compartment for sealing a product contained in the storage compartment. A skirt extends downwardly from the rim and includes a grip surface defined on the skirt. The grip surface can be held by the consumer to support the container assembly when a hot liquid is held in the container and may insulate against heat from the hot liquid.

## BRIEF DESCRIPTION OF THE SEVERAL VIEWS OF THE DRAWINGS

[0011] Having thus described the invention in general terms, reference will now be made to the accompanying drawings, which are not necessarily drawn to scale, and wherein:

[0012] **FIG. 1** is a perspective view of a container assembly in accordance with one embodiment of the present invention, illustrating the membrane of the overcap being removed to expose the product within the storage compartment;

[0013] **FIG. 2** is a schematic, cross-sectional view of the container assembly of **FIG. 1**, showing the product stored within the storage compartment;

[0014] **FIG. 3** is a perspective view of a container assembly in accordance with a second embodiment of the present invention, illustrating the membrane of the overcap being removed to expose the product within the storage compartment; and

[0015] **FIG. 4** is a schematic, cross-sectional view of the container assembly of **FIG. 3**, showing the product stored within the storage compartment.

## DETAILED DESCRIPTION OF THE INVENTION

[0016] The present invention now will be described more fully hereinafter with reference to the accompanying draw-

ings, in which some, but not all embodiments of the invention are shown. Indeed, the invention may be embodied in many different forms and should not be construed as limited to the embodiments set forth herein; rather, these embodiments are provided so that this disclosure will satisfy applicable legal requirements. Like numbers refer to like elements throughout.

[0017] With reference to **FIGS. 1 and 2**, a container assembly **10** in accordance with one embodiment of the invention is illustrated. The container assembly **10** of **FIG. 1** includes a lid or overcap **12** and a container **14** that defines a cup. Further embodiments of the present invention may comprise alternative containers. The container **14** is structured to hold a liquid, in particular a hot liquid, which can be inserted into the container and removed from the container, through a top opening **16**. The container **14** of **FIG. 1** is a tapered cup of a paper, plastic, or expanded polystyrene material, to list three non-limiting examples. The container **14** includes a bottom wall **18** and a generally tubular side wall **20** that is integrally formed with and upstanding from the bottom wall and terminates at a top edge **22**. As shown, the side wall **20** may taper such that the diameter is larger at the opening **16** than at the bottom wall **18**. The top edge **22** encircles and defines the opening **16** of the container **14**. The top edge **22** can also include a bead that projects radially outward from the top edge of the side wall **20** to provide an improved surface for securing the overcap **12** to the container **14**. The illustrated overcap **12** and container **14** are generally circular, but the present invention may also include container assemblies **10** of any geometric shape or relative size. In addition, the container **14** may be a container for holding non-liquid products.

[0018] The overcap **12** has a top wall **24** that is configured to extend over the opening **16** of the container **14** when the overcap is secured thereon. The top wall **24** defines a recessed storage compartment **26** in an underside of the top wall. The storage compartment **26** is configured to receive a product **28** that is kept in the storage compartment by a removably attached membrane **30**. The membrane **30** is removable, as indicated by the arrow in **FIG. 1**, to provide access to the product **28**, preferably when the product is to be mixed with a hot liquid in the container **14**. The membrane **30** can be completely removed from the overcap **12** by the consumer when the consumer removes the product **28**; however, the membrane can also remain attached to the overcap after removal of the product **28**. The membrane **30** is initially attached to the underside of the top wall **24** during the manufacture of the container assembly **10** after the product **28** has been placed in the storage compartment **26**.

[0019] The membrane **30** of the illustrated embodiment is constructed of a membranous material that is relatively impermeable to moisture. Examples of such membranous material include, but are not limited to metal foil, polyethylene terephthalate, metallized polyethylene terephthalate, polyethylene naphthalate, metallized polypropylene, metal oxide and silicate coated polyester, metal oxide and silicate coated polypropylene, ethylene vinyl alcohol copolymer, and mixtures thereof. The membrane **30** preferably prevents the ingress of moisture and the egress of the product **28** while the membrane is fully attached to the underside of the top wall **24**.

[0020] The top wall **24** further includes an annular portion **32** surrounding the storage compartment **26**. The annular portion **32** of **FIG. 1** is a substantially horizontal surface that defines a drinking aperture **34**. The aperture **34** provides access to a liquid in the container **14**, which may be a hot liquid into which the stored product **28** is mixed, such that a consumer can drink the liquid without removing the overcap **12**. The aperture **34** of **FIG. 1** includes two parallel walls joined by two arcuate walls; however, apertures of further embodiments of the invention may have any geometric pattern or may be of any size relative to the annular portion **32**.

[0021] Surrounding the annular portion **32** is a rim **36**, as illustrated in **FIG. 2**. The rim **36** defines a recess **38** that is sized to engage the top edge **22** of the side wall **20** of the container **14**. The engagement of the recess **38** and the top edge **22** holds the top wall **24** of the overcap **12** in position over the opening **16**. The recess **38** defines a channel within the rim **36** that preferably provides an interference fit with the top edge **22**, by virtue of the width of the recess being less than the thickness of the top edge when the overcap **12** is in an undeformed free state. The recess **38** preferably engages the top edge **22** along the entire circumference of the top edge to also provide a sealed interface to prevent the product, which is typically a liquid, from passing between the overcap **12** and the top edge **22**.

[0022] Extending downwardly from the rim **36** is the skirt **40**, as shown in **FIG. 2**. The skirt **40** is attached to the rim **36** and encircles a top portion **42** of the container **14**. The top portion **42** of the container **14** is the portion of the side wall **20** opposite the bottom wall **18** and includes the top edge **22**. In other words, the top portion **42** is the side wall **20** immediately below the top edge **22**. The skirt **40** may extend perpendicular to the substantially horizontal annular portion, or the skirt may extend generally parallel to the top portion **42** of the container. In addition, the skirt **40** can flare outwardly, as in **FIG. 2**. The skirt **40** preferably extends downwardly below a lowermost surface of the top wall **24**. As illustrated in **FIG. 2**, the lowermost surface of the top wall **24** is the surface to which the membrane **30** is attached.

[0023] The skirt **40** defines a grip surface **44**, which a consumer may grasp to hold the container assembly **10** and which may insulate the consumer against heat if a hot liquid is held in the container **14**. The grip surface **44** may be of any axial length that is sufficient to allow a customer to hold the container assembly **10** with or without touching the remainder of the overcap **12** or container **14**. The overcap **12** of **FIG. 1** has a grip surface **44** of at least approximately 0.5 inch in length, though the grip surface is preferably at least 1 inch in length and still more preferably is 2 inches in length, as illustrated in **FIGS. 3 and 4**.

[0024] A second embodiment of the container assembly **110** is illustrated in **FIGS. 3 and 4**, wherein the overcap **112** includes a skirt **140** that provides a grip surface **144**. The grip surface **144** extends downwardly from the rim **136** of the overcap **112** and is intended to be a surface a consumer can grasp to hold the container assembly **110** when the liquid in the container is hot. The container **114** includes a bottom wall **118** and a side wall **120** upstanding from the bottom wall and terminating at a top edge **122**. The top edge **122** encircles and defines a top opening **116** of the container **114**, and the top edge can also include a bead that projects radially outward from the top edge.

[0025] The overcap **112** of **FIGS. 3 and 4** has a top wall **124** configured to extend over the opening **116** of the

container **114** when the overcap is secured thereon. The top wall **124** defines a recessed storage compartment **126** on an underside of the top wall. The storage compartment **126** is configured to receive a product **128** that is sealed in the storage compartment by a membrane **130**. The membrane **130** is removable, as indicated by the arrow in **FIG. 3**, to provide access to the product **128**. The membrane **130** is removably attached to a surface on the underside of the top wall **124** during the manufacture of the container assembly **110**. The membrane **130** is also relatively impermeable to moisture.

[**0026**] The top wall **124** further includes an annular portion **132** surrounding the storage compartment **126**. The annular portion **132** of **FIG. 3** is a substantially horizontal surface that defines a drinking aperture **134**. The aperture **134** provides access to a liquid in the container **114** and can have any geometric pattern or be of any size relative to the annular portion **132**. Surrounding the annular portion **132** is a rim **136**, as illustrated in **FIG. 4**. The rim **136** defines a recess **138** that is sized to engage the top edge **122** of the side wall **120** of the container **114** to hold the overcap **112** in position over the opening **116**. The recess **138** preferably provides an interference fit with the top edge **122** and preferably engages the top edge along the entire circumference of the top edge to provide a sealed interface.

[**0027**] Extending downwardly from the rim **136** is the skirt **140**, as shown in **FIG. 4**. The skirt **140** is attached to the rim **136** and encircles a top portion **142** of the container **114**. The top portion **142** of the container **114** is immediately below the top edge **122**. The skirt **140** includes a grip surface **144**, which a consumer may grasp to hold the container assembly **110**. The grip surface **144** is preferably 2 inches in axial length in the embodiment illustrated in **FIG. 4**. The skirt **140** also extends downwardly below a lowermost surface of the top wall **124**, which is the surface to which the membrane **130** is attached, similar to the embodiment of **FIG. 2**.

[**0028**] The skirt **140** of **FIG. 3** also includes a plurality of spacers **146** on an inner surface **148** of the skirt. The spacers **146** are circumferentially spaced apart from each other and extend downwardly from the rim **136** of the overcap **112** to an end of the skirt **140** opposite the rim. The spacers **146** can improve the engagement between the overcap **112** and the container **114** if the spacers are sized to create an interference fit with the side wall **120** of the container, as illustrated in **FIG. 4**. The spacers **146** project radially inwardly from the inner surface **148** of the skirt **140** and radially space the skirt from the container side wall **120** to insulate against the heat of a hot liquid in the container **114** by providing a continuous pocket, or individual pockets, of air between the side wall **120** and the skirt **140** that reduce the thermal transfer to the skirt. Therefore, the skirt **140** of **FIGS. 3 and 4** provides a grip surface **144** that a consumer can grasp to hold the container assembly **110** and to insulate the consumer's hand when the liquid in the container **114** is hot.

[**0029**] The storage compartment **26** and **126** of **FIGS. 2 and 4**, respectively, is a frustoconical chamber that includes a flat top surface. This domed portion of the top wall **24** and **124** defines the storage compartment **26** and **126**, respectively. Further embodiments of the present invention include storage compartments of any shape, a non-limiting example being hemispherical. In addition, the storage compartment **26** and **126** of additional embodiments also include a desiccant to absorb moisture so that the product, which is preferably a powder, is exposed to a minimal amount of moisture. The desiccant can be joined to the inside surface of the storage compartment **26** and **126** or can be incorporated as a layer of the membrane **30** and **130**. Non-limiting examples of desiccant material include sodium phosphate di-basic, calcium oxide, sucrose, gelatin, bentonite clay, and silica gel.

[**0030**] The annular portion **32** and **132** of **FIGS. 2 and 4**, respectively, define a stacking surface upon which another container **14** and **114** can be stacked so that the top container is firmly supported by the overcap **12** or **112** of the bottom container. The bottom wall **18** and **118** of the container **14** and **114**, respectively, defines a recess structured and arranged to receive the top wall **24** and **124** of the compartment **26** and **126** of the overcap **12** and **112**. Advantageously, the recess of the bottom wall **18** and **118** prevents lateral sliding of the stacked container relative to the bottom container. Further embodiments of the overcap **12** and **112** may define an edge of the rim **36** and **136** that engages the bottom of the side wall **20** or **120** to prevent lateral sliding of the stacked container relative to the bottom container. Still further embodiments of the present invention may comprise alternative stacking surfaces or features for secure stacking of a top container onto the overcap of a bottom container.

[**0031**] To manufacture the container assembly **10** of the present invention, the container **14** and the overcap **12** are individually formed. Preferably, the overcap **12** is thermoformed, injected molded, or blow molded from a polymer material. The overcap **12** may be formed to include a multi-layer polymer structure to provide oxygen and moisture barrier should the packaged product require such a barrier. After the overcap **12** hardens, the product **28** can be inserted into the storage compartment **26** and the membrane **30** attached to the underside of the top wall **24**. The membrane **30** is attached to the overcap **12** by any suitable process, which include conductive heat sealing, ultrasonic sealing, the applying of adhesives, or any other joining method. Once the product **28** is securely stored in the storage compartment **26**, the overcap **12** can be paired with the container **14** to complete the container assembly **10**.

[**0032**] Many modifications and other embodiments of the invention set forth herein will come to mind to one skilled in the art to which the invention pertains having the benefit of the teachings presented in the foregoing descriptions and the associated drawings. Therefore, it is to be understood that the invention is not to be limited to the specific embodiments disclosed and that modifications and other embodiments are intended to be included within the scope of the appended claims. Although specific terms are employed herein, they are used in a generic and descriptive sense only and not for purposes of limitation.

That which is claimed:

**1**. An overcap for a container, wherein the overcap can store a product for mixing with a liquid held in the container, the overcap comprising:

a rim configured to engage the container;

a top wall defining a storage compartment in an underside of the top wall, the top wall having a substantially horizontal annular portion radially inward of the rim

and surrounding the storage compartment, a drinking aperture being defined in the annular portion; and

a membrane removably attached to the underside of the top wall of the overcap covering the storage compartment for sealing a product contained in the storage compartment.

**2**. An overcap of claim 1, further comprising a skirt extending downwardly from the rim.

**3**. An overcap of claim 2, wherein the skirt defines a grip surface.

**4**. An overcap of claim 3, wherein the skirt extends below a lowermost surface of the top wall of the overcap.

**5**. An overcap of claim 3, wherein the skirt includes a plurality of spacers extending along an inner surface of the skirt.

**6**. An overcap of claim 5, wherein the plurality of spacers are circumferentially spaced apart from each other and extend downwardly from the rim of the overcap.

**7**. An overcap of claim 1, wherein the storage compartment defines a domed portion.

**8**. An overcap of claim 7, wherein the domed portion has incorporated therein a desiccant.

**9**. An overcap of claim 1, wherein the membrane is relatively impermeable to moisture.

**10**. An overcap for a container, wherein the overcap can store a product for mixing with a liquid held in the container, the overcap comprising:

a rim configured to engage the container;

a top wall defining a storage compartment in an underside of the top wall, the top wall having a substantially horizontal annular portion radially inward of the rim and surrounding the storage compartment;

a skirt extending downwardly from the rim, wherein the skirt defines a grip surface; and

a membrane removably attached to the underside of the top wall of the overcap covering the storage compartment for sealing a product contained in the storage compartment.

**11**. An overcap of claim 10, wherein the skirt extends below a lowermost surface of the top wall of the overcap.

**12**. An overcap of claim 11, wherein the skirt includes a plurality of spacers extending along an inner surface of the skirt.

**13**. An overcap of claim 12, wherein the plurality of spacers are circumferentially spaced apart from each other and extend downwardly from the rim of the overcap.

**14**. An overcap of claim 13, wherein the storage compartment defines a domed portion.

**15**. An overcap of claim 14, wherein the domed portion has incorporated therein a desiccant.

**16**. An overcap of claim 10, wherein the membrane is relatively impermeable to moisture.

**17**. An overcap of claim 10, further comprising a drinking aperture defined in the annular portion.

**18**. A container assembly comprising:

a container comprising a bottom wall and a tubular side wall upstanding from the bottom wall, the side wall having a top edge encircling a top opening of the container;

a cap having rim configured to engage the top edge of the container, the cap having a top wall defining a storage compartment in an underside of the top wall, the top wall having a substantially horizontal annular portion radially inward of the rim and surrounding the storage compartment, a drinking aperture being defined in the annular portion; and

a membrane removably attached to the underside of the top wall of the overcap covering the storage compartment for sealing a product contained in the storage compartment.

**19**. A container assembly of claim 18, further comprising a skirt extending downwardly from the rim.

**20**. A container assembly of claim 19, wherein the skirt extends below a lowermost surface of the top wall of the overcap and defines a grip surface.

**21**. A container assembly of claim 20, wherein the skirt includes a plurality of spacers extending along an inner surface of the skirt, wherein the plurality of spacers are circumferentially spaced apart from each other and extend downwardly from the rim of the overcap.

**22**. A container assembly of claim 18, wherein the membrane is relatively impermeable to moisture.

* * * * *