April 8, 1930. L. W. LANGFORD 1,753,991

KEYBOARD OPERATOR

Filed April 18, 1927

FIG. 1.

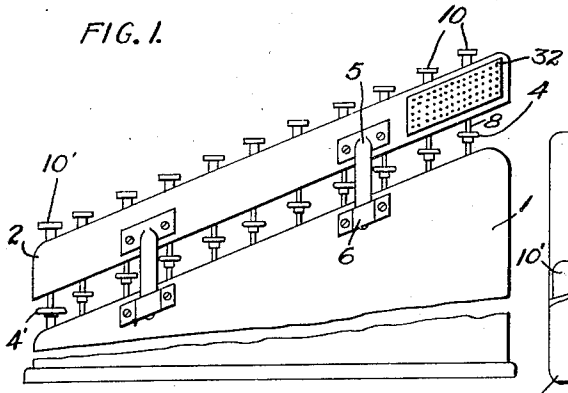

FIG. 2.

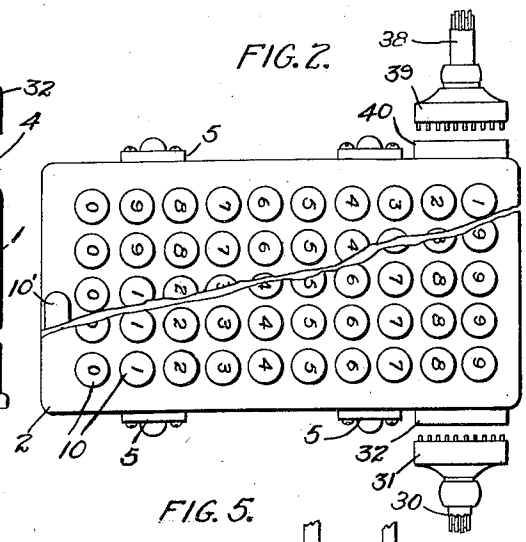

FIG. 4.

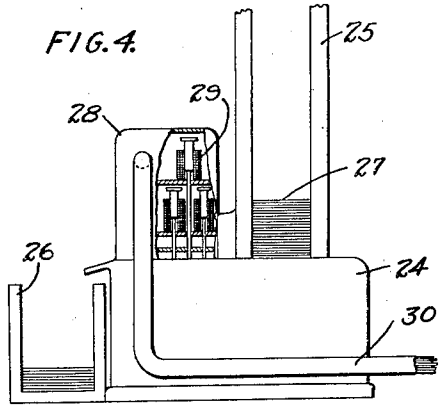

FIG. 5.

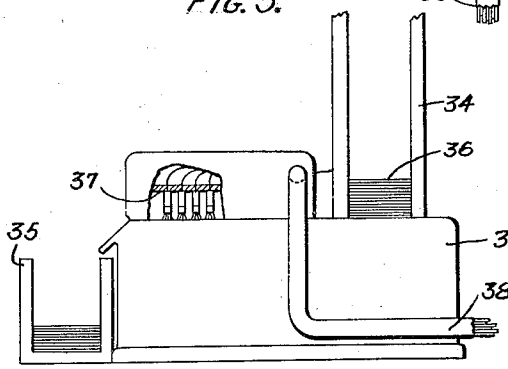

FIG. 3.

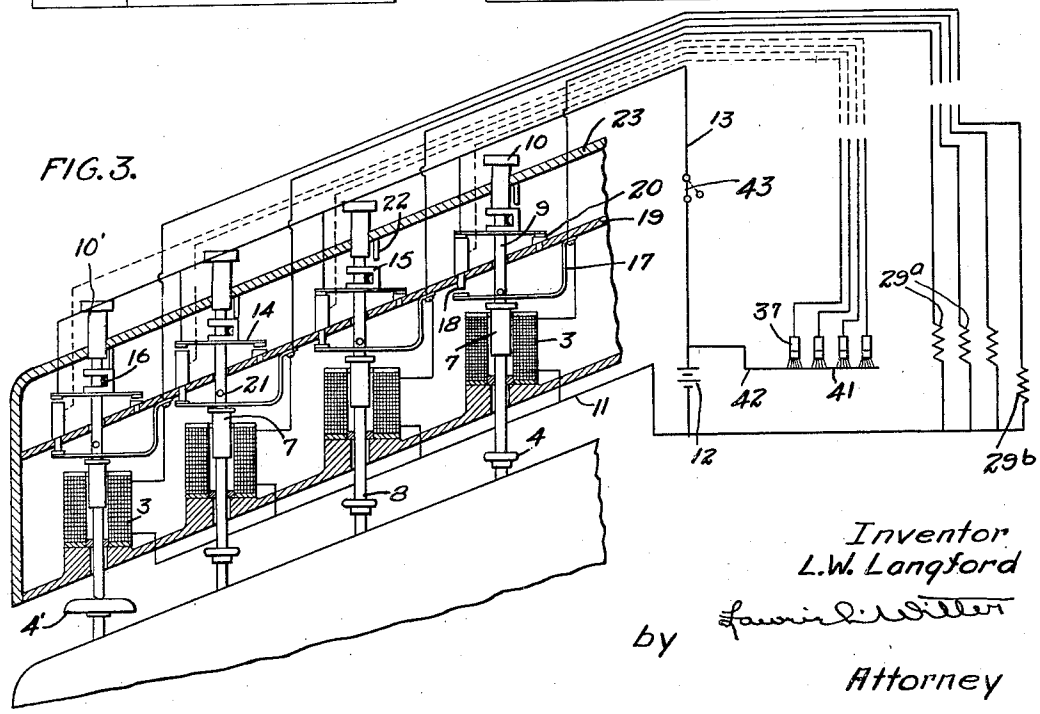

Inventor
L. W. Langford
by Laurie L. Miller
Attorney

Patented Apr. 8, 1930 1,753,991

UNITED STATES PATENT OFFICE

LEONARD W. LANGFORD, OF BOSTON, MASSACHUSETTS

KEYBOARD OPERATOR

Application filed April 18, 1927. Serial No. 184,773.

This invention relates to a keyboard operator in the form of a frame adapted to be superposed over the keyboard of a machine to be operated, the frame having means therein for operating the keys of the keyboard. One object of the invention is to provide such a mechanism having power means for operating the keys and manually operated means for controlling the power means, the power means thereby performing the work while the controlling means requires comparatively little effort.

More specifically my invention comprises a frame having a plurality of solenoids, one for each key to be operated, and a button for controlling each solenoid. The solenoid armatures act directly on the keys and the solenoids and buttons are located directly over the keys whereby the buttons have the same relative location as the keys to be operated. Switch means is provided for each solenoid whereby the depressing of the button closes the solenoid circuit and movement of the armature automatically opens the circuit, the solenoid thereby being energized only long enough to depress its key. It is a further object of my invention to provide a mechanism of this type.

My invention herein also contemplates a key board operator which will automatically control another machine, such as the punch press disclosed in my co-pending application Serial No. 162,367, filed January 20th, 1927. It is therefore a further object of my invention to provide a keyboard operator of the first mentioned type which also embodies means to automatically control another machine.

My invention furthermore contemplates a keyboard operator which may be controlled and operated automatically from another machine such as disclosed in co-pending applications No. 165,196, filed February 1st, 1927, and No. 172,102, filed March 2nd, 1927. It is therefore a further object of my invention to provide a keyboard operator of the last mentioned type which may be thus automatically controlled and operated.

In the accompanying drawing I have illustrated one specific embodiment of my invention, but it will be understood that the invention can be otherwise embodied and that the drawing is not to be construed as defining or limiting the scope of the invention, the claims appended hereto being relied upon for that purpose.

Referring to the figures of the drawing:

Fig. 1 is a side elevation of an adding machine having my superposed keyboard operator mounted thereon.

Fig. 2 is a plan view thereof.

Fig. 3 is a fragmentary enlarged view thereof showing cooperating mechanism diagrammatically.

Fig. 4 illustrates a punch press which may be controlled from my keyboard operator.

Fig. 5 illustrates a sensing mechanism adapted to operate on punched cards and thereby automatically control and operate my keyboard operator.

Referring specifically to the mechanisms illustrated in the accompanying drawing, 1 indicates an adding machine of the Burroughs type on which is mounted my superposed keyboard operator 2. This operator comprises a frame in which are mounted a plurality of solenoids 3, one for each key 4 to be operated. The frame 2 is adapted to be mounted on the adding machine over the keyboard by means of posts 5 carried by the frame and adapted to fit within straps 6 on the adding machine. The solenoids 3 are preferably so located in the frame 2 that when the frame is in place on the adding machine a solenoid is located directly over each key 4.

An armature 7 is mounted in each solenoid 3 and carries a downwardly extending stem 8 and an upwardly extending stem 9. A marked button 10, like the corresponding button 4, is carried on each stem 9. The stem 8 rests on the key or button 4 which thereby supports the armature. One terminal of all the solenoids is connected to a wire 11 which extends through a battery 12 to a wire 13 connected to switch-pieces 14. Each switch-piece 14 is secured to a U-shaped member 15, slidably mounted on the stem 9 and a leaf spring 16 binds each member 15 frictionally to its stem.

The other terminal of each solenoid is con-

nected to a leaf spring 17 which is normally in contact with a plug 18 seated in a plate 19. The switch-piece 14 has a contact on one end thereof adapted to cooperate with the plug 18. A block 20 is provided for receiving the opposite end of each piece 14. A pin 21 on each stem 9 is adapted to engage the leaf spring 17 and open the switch 17—18 at the lowermost position of the armature. A stop 22 is provided on the top plate 23 for each member 15. The switch and operating mechanism for the operating bar 10′ of the keyboard 2 is identical with that of the buttons 10.

The mechanism above described is for the purpose of mechanically operating the keys 4 of the adding machine and the operation thereof is as follows: The keys or buttons 10 of the superposed board 2 are preferably identical with the keys 4 and are manipulated in a like manner. The slight depressing of a button 10 moves the member 14 into contact with the plug 18 and establishes a circuit through that solenoid and battery 12. This position is illustrated by the third solenoid in Fig. 3. The armature 7 is thereby attracted and depresses the key 4. It should also be noted that button 10 is drawn downwardly with the armature, this operation being of considerable aid to the operator since it very gently informs him through the sense of touch when proper contact has been made. When reaching its lowermost position the armature pin 21 engages the leaf 17 and breaks the circuit at 18. This position is illustrated by the fourth solenoid in Fig. 3. When all the buttons indicating an item have been depressed the operator depresses the operating bar 10′, which depresses the bar 4′ of the machine in the same manner as the buttons 4. The adding machine thereupon functions to record the item and the buttons 4 are automatically released in the usual manner. Upward movement of the buttons 4 and bar 4′ raises their armatures 7 and, through the frictional contact at 16, the members 14 are raised to break the contact with plug 18 before the spring 17 makes contact therewith. This upward movement of the members 14 and 15 is limited by the stops 22.

It will therefore be seen that the adding machine keys are operated mechanically and the only manual operation necessary is the selecting of the keys by a slight depressing of the buttons 10. Furthermore, it will be noted that the buttons of the superposed board are an exact duplicate of the adding machine keyboard buttons. By this construction no new burden whatever is placed on the operator since the operation, except for being easier and requiring less energy, is the same as when operating directly on the adding machine keyboard. While my invention has herein been particularly illustrated in connection with an adding machine it will be understood that the same is in like manner applicable to any keyboard, such for example as a typewriter.

As has been heretofore stated my invention also contemplates a superposed keyboard operator which, in addition to operating the keyboard therebeneath, will also function to automatically control another machine such as the punch-press illustrated in the said copending application No. 162,367. Such a punch-press is generally illustrated in Fig. 4. This machine comprises a body 24 having a blank card magazine 25 and a punched card receiving chamber 26. Any suitable means may be provided for automatically feeding the cards 27 under the punch unit 28 where they are punched to correspond with the items listed on the adding machine 1, the punches being selected through solenoids 29. These solenoids are controlled by wires within a cable 30. A switch block 31 on the free end of this cable is adapted to be coupled into a cooperating switch-block 32 on the keyboard operator 2.

The wiring connections for controlling the punch-press 24 are diagrammatically illustrated in Fig. 3. Three of the punch solenoids 29 are illustrated at 29^a and the solenoid for causing the punch-press to function and feed the cards is indicated by 29^b. One terminal of each of these solenoids is connected respectively to the spring contacts 17 and the other terminals are connected to the wire 11. The depressing of any one of the buttons 10 causes the corresponding solenoid 29^a to be energized and depress its punch. The depressing of the operating button 10′ causes the solenoid 29^b to be energized and this causes the punch-press to function.

My keyboard operator is also adapted to be operated automatically from punched cards, these cards being run through a sensing mechanism such as shown in Fig. 5 which acts as a sending mechanism to automatically control the keyboard operator. This mechanism comprises a body 33 having a card magazine 34 and a card receiving chamber 35. Means is provided for automatically feeding the punched cards 36 through the sensing mechanism beneath the brushes 37. The brushes 37 and their cooperating contacts are connected to a cable 38 having a switch-block 39 on its free end. This switch-block is adapted to be coupled into a cooperating switch block 40 on the operator 2.

The wiring connections from the block 40 to the solenoids 3 are as follows (Fig. 3): The brushes 37 are connected by wires to the blocks 18 and the brushes are adapted to cooperate with a contact plate 41. A wire 42 connects this plate to the wire 13. A switch 43 in the wire 13 is opened when using the machine 33. As the cards pass over the plate 41 beneath the brushes 37, the brushes engage through the perforations and energize corre-

sponding solenoids 3, as will be understood.

In the drawing I have preferred to illustrate all the mechanisms as operated from a single battery 12. It will be understood, however, that separate batteries may be provided for the different mechanisms if desired, the number of batteries and arrangement of the wiring construction being incidental to the invention.

I claim:

1. A keyboard operator comprising the combination of a frame, means adapted to support the frame over a keyboard to be operated, a plurality of solenoids carried by the frame for respectively operating the keys of the keyboard, an armature in each solenoid, means cooperating with each armature to depress its key when the solenoid is energized, a controlling button on the frame for each solenoid, means cooperating with each button for closing its solenoid circuit when the button is depressed, and means operated by the armature when the solenoid is energized to automatically open the circuit and hold the same open until the circuit has been opened at another point upon return movement of the armature.

2. A keyboard operator comprising the combination of a frame, means adapted to support the frame over a keyboard to be operated, a plurality of solenoids carried by the frame for respectively operating the keys of the keyboard, an armature in each solenoid, means cooperating with each armature to depress its key when the solenoid is energized, a controlling button on the frame for each solenoid, two switches in each solenoid circuit, depressing of a button being adapted to close one switch and energize the solenoid, means operated by the armature when the solenoid is energized to open the other switch and means automatically opening the said one switch when the armature returns to its normal position.

3. A keyboard operator comprising the combination of a frame, means adapted to support the frame over a keyboard to be operated, a plurality of solenoids carried by the frame for respectively operating the keys of the keyboard, an armature in each solenoid, means cooperating with each armature to depress its key when the solenoid is energized, a controlling button on the frame for each solenoid, a normally closed switch and a second switch in each solenoid circuit, means frictionally connected to each armature for closing its said second switch and energizing its solenoid when the button is depressed, and means operated by the armature when the solenoid is energized to open the normally closed switch, retracting movement of the armature being adapted to operate through the friction means to open the said second switch prior to the closing of the normally closed switch.

4. A keyboard operator comprising the combination of a frame, means adapted to support the frame over a keyboard to be operated, a plurality of solenoids carried by the frame for respectively operating the keys of the keyboard, an armature in each solenoid, means cooperating with each armature to depress its key when the solenoid is energized, a controlling button on the frame for each solenoid, means cooperating with each button for closing its solenoid circuit when the button is depressed, a multiple contact terminal socket on the frame for receiving a cooperating terminal plug connection from another machine, and means including wiring connections from the terminal socket to the respective key operating means for automatically controlling the operation of the said machine in accordance with the operations of the keyboard operator.

5. A keyboard operator comprising the combination of a frame, means adapted to support the frame over a keyboard to be operated, a plurality of solenoids carried by the frame for respectively operating the keys of the keyboard, an armature in each solenoid, means cooperating with each armature to depress its key when the solenoid is energized, a controlling button on the frame for each solenoid, means cooperating with each button for closing its solenoid circuit when the button is depressed, a multiple contact terminal socket on the frame for receiving a cooperating terminal plug connection from a sending machine, and means including wiring connections from the terminal socket to the solenoids whereby the keyboard operator can be automatically operated from the sending machine.

6. A keyboard operator comprising the combination of a frame, means adapted to support the frame over a keyboard to be operated, a plurality of solenoids carried by the frame for respectively operating the keys of the keyboard, an armature in each solenoid, means cooperating with each armature to depress its key when the solenoid is energized, a controlling button on the frame for each solenoid, means cooperating with each button for closing its solenoid circuit when the button is depressed, means including wiring connections to the keyboard operator whereby another machine can be automatically controlled therefrom, and other means including wiring connections to the solenoids of the keyboard operator whereby the same can be automatically operated from a sending machine.

7. A keyboard operator comprising the combination of a frame, means adapted to support the frame over a keyboard to be operated, a plurality of solenoids carried by the frame and so located as to be respectively positioned over the keys to be operated when the frame is supported in place by the said means, an armature in each solenoid located

to be directly above its respective key, means beneath the bottom of each armature in a manner to engage the top of its key and depress the same when the solenoid is energized, wiring connections to the solenoids, a plurality of switches in the said wiring connections, a plurality of operating buttons respectively directly over and adapted to respectively control the solenoids through the switches, the switch buttons thereby having the same relative location as the keys of the keyboard, and means causing the buttons to be depressed mechanically when the solenoids are energized.

8. A keyboard member adapted to be superposed over the keyboard of an adding or like machine, a plurality of keys carried by the member in a manner adapted to respectively operate the keys of such machine when the member is thus superposed, and a plurality of switches respectively associated with said keys, and operated by the keys when the keys are operated, the switches being adapted to control another mechanism.

In testimony whereof I affix my signature.

LEONARD W. LANGFORD.