Sept. 25, 1934. W. M. BROWER 1,974,409

ELECTRICAL ALARM CLOCK

Filed May 11, 1931 4 Sheets-Sheet 1

FIG. 1.

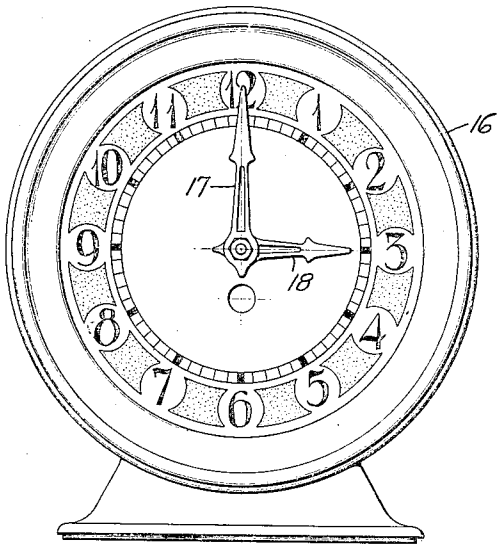

FIG. 2.

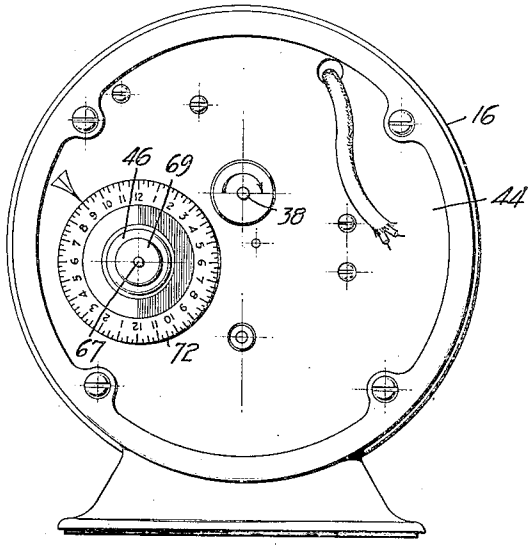

INVENTOR.
William M. Brower
BY
White, Frost, Fleischer & Lothrop
ATTORNEYS.

Sept. 25, 1934. W. M. BROWER 1,974,409

ELECTRICAL ALARM CLOCK

Filed May 11, 1931 4 Sheets-Sheet 2

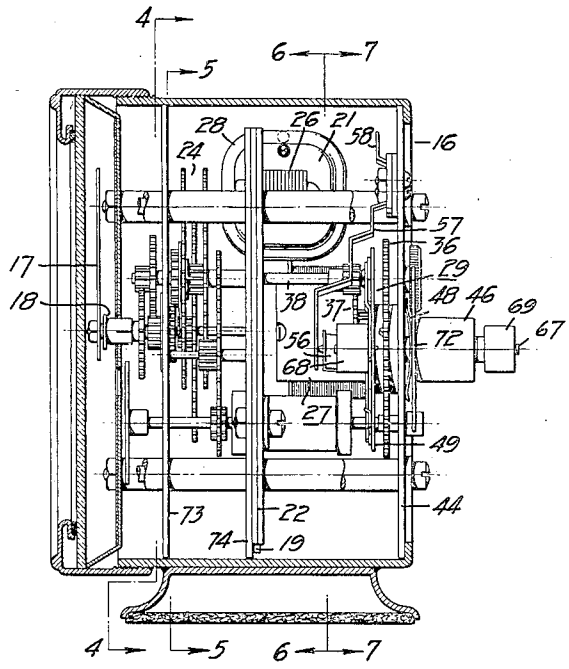

FIG. 3.

FIG. 4.

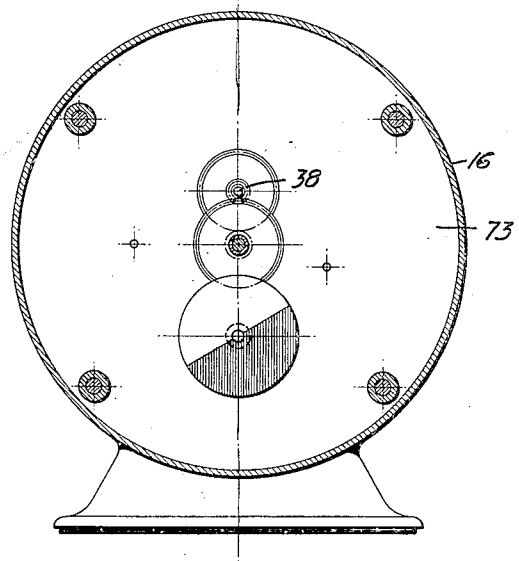

INVENTOR.
William M. Brower
BY
White, Frost, Flehr & Lothrop
ATTORNEYS.

Sept. 25, 1934. W. M. BROWER 1,974,409

ELECTRICAL ALARM CLOCK

Filed May 11, 1931 4 Sheets-Sheet 3

FIG. 5.

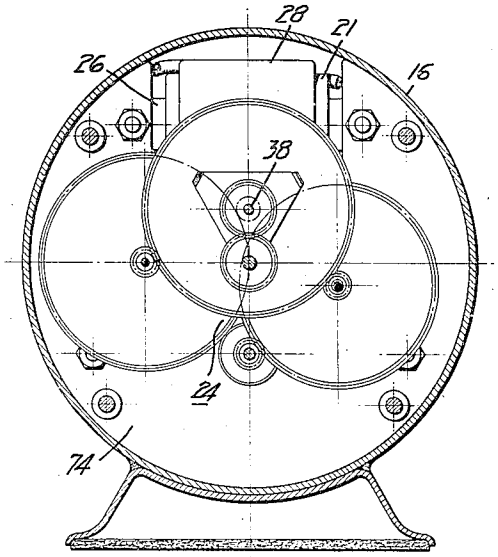

FIG. 6.

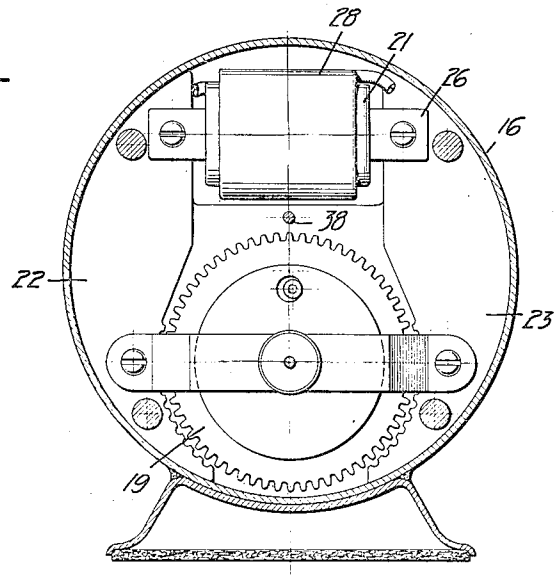

INVENTOR.
William M. Brower
BY
White, Frost, Fleher & Lothrop
ATTORNEYS.

Sept. 25, 1934. W. M. BROWER 1,974,409

ELECTRICAL ALARM CLOCK

Filed May 11, 1931 4 Sheets-Sheet 4

FIG. 7.

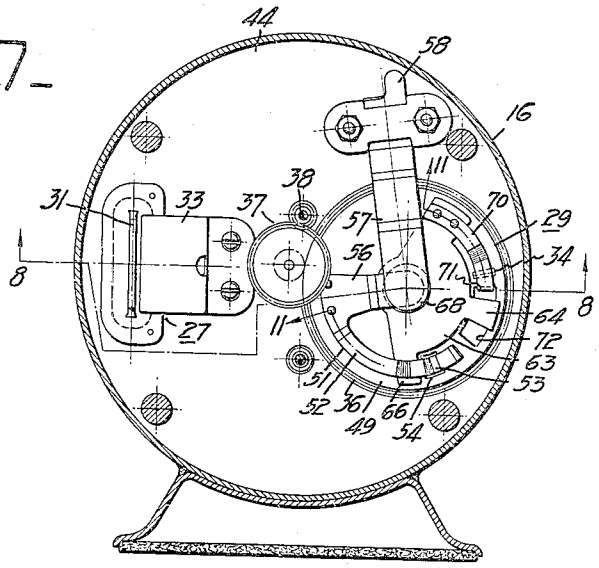

FIG. 8.

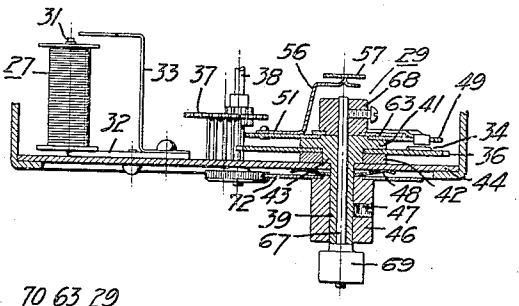

FIG. 9.

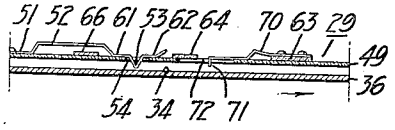

FIG. 10.

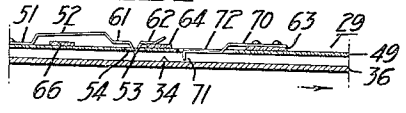

FIG. 11.

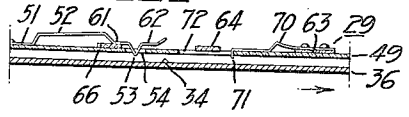

FIG. 12.

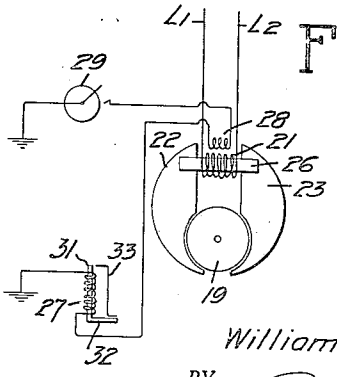

INVENTOR.
William M. Brower
BY
White, Prost, Flehr & Lothrop
ATTORNEYS.

Patented Sept. 25, 1934 1,974,409

UNITED STATES PATENT OFFICE

1,974,409

ELECTRICAL ALARM CLOCK

William M. Brower, Palo Alto, Calif., assignor to Stanford Products, Ltd., San Francisco, Calif., a corporation of California

Application May 11, 1931, Serial No. 536,504

2 Claims. (Cl. 58—19)

My invention relates to an alarm and a control circuit therefor which is particularly suitable for use in electrically operated clocks.

In electrical clocks it is common to utilize electromagnetic means, frequently in the form of a rotary electric motor, for driving the clock mechanism. When alternating current is available a synchronous motor can be employed advantageously for driving the clock. Irrespective, however, of the type of electrical means employed for driving such clocks, it is desirable in the interest of accuracy to maintain the electrical circuits free from accidental interruptions. Heretofore, in providing electrical clocks with auxiliary time controlled apparatus, such as audible alarms and the like, it has been necessary to complicate the electrical circuits and associated switching apparatus to such an extent that the accuracy of the clock was adversely affected upon failure of any part of the auxiliary apparatus.

It is one object of my invention to provide an electrical clock system with an auxiliary time controlled device, such as an audible alarm, in which the circuits of the clock and of the alarm are inductively coupled so that accidental failure of the alarm does not affect the operation of the clock.

Another object is to provide a system of the character described in which the circuit of the auxiliary apparatus can be grounded to the framework of the clock without grounding the energizing circuit of the clock, thereby greatly simplifying the construction of the apparatus.

Another object is to provide a system of the character described in which the electromagnetic means for driving the clock is utilized as the primary winding of an induction transformer for energizing the circuit of the auxiliary time controlled apparatus.

Still another object is to provide an improved time controlled switch for the auxiliary apparatus.

A further object is to provide a novel mounting for the alarm apparatus which facilitates operative attachment of the alarm to a clock.

These and other objects and advantages are attained in the embodiment of my invention illustrated in the accompanying drawings, in which:

Fig. 1 is a front elevation of an electrical alarm clock embodying the principles of my invention.

Fig. 2 is a rear elevation of the alarm clock shown in Fig. 1.

Fig. 3 is a side elevation of the device with parts of the casing in section to show the internal construction.

Fig. 4 is a cross section taken along the plane indicated by line 4—4 of Fig. 3.

Fig. 5 is a cross sectional view taken along the plane indicated by line 5—5 of Fig. 3.

Fig. 6 is a cross sectional view taken along the plane indicated by line 6—6 of Fig. 3.

Fig. 7 is a cross sectional view taken along the same plane as Fig. 6 but looking in the opposite direction as indicated by the arrows.

Fig. 8 is a cross sectional view taken along the plane indicated by line 8—8 of Fig. 7.

Figs. 9, 10 and 11 are cross sectional views taken along the line 11—11 of Fig. 8 illustrating different positions of a novel time controlled electrical switch which can be used for controlling the circuit of the auxiliary apparatus.

Fig. 12 is a circuit diagram.

In its preferred form the invention comprises an audible alarm or the like which is adapted to be controlled by an electrically driven clock. Preferably, the alarm circuit is energized by current induced therein from the operating circuit of the clock, a winding in the alarm circuit being provided for this purpose which is inductively coupled with the electromagnetic means employed for driving the clock. One side of the alarm circuit is preferably grounded to the framework of the apparatus, thereby simplifying the construction by minimizing the number of parts which need to be insulated from the framework. Since the alarm circuit is separate and distinct from the energizing circuit of the clock and since the alarm can be constructed to operate at a reduced voltage, grounding of the alarm circuit to the framework does not in any way constitute a source of danger to persons handling the device. Furthermore, accidental failure of the alarm circuit or the apparatus therein will not disturb the operation of the timing mechanism of the clock in any manner.

Preferably, a time controlled switch is employed to control the circuit of the alarm and in the preferred form of switch means is provided for manually disabling the switch against closing, said means being selectively operative to disable the switch temporarily or indefinitely, as desired.

Automatic time controlled means is provided for reconditioning the switch for a subsequent closing operation when the switch has been temporarily disabled, but the automatic means is ineffective for this purpose when the switch has been indefinitely disabled. After the switch has been disabled either temporarily or indefinitely it can be reconditioned at any time by manual means provided for this purpose.

Referring now to the drawings, I have shown an electrically driven clock 16 having the customary minute hand 17 and hour hand 18. In the type of clock illustrated a synchronous motor is employed having a rotor 19 and a stator winding 21 is provided for inducing a magnetic field in the pole pieces 22 and 23 to energize the motor. The synchronous motor can be designed to operate on the commercial source of alternating cur-

rent and a gear train 24 driven by the rotor 19 serves to move the hands of the clock at the desired rate to indicate the time.

The stator winding 21 is preferably wound about a laminated core 26 and in addition to its usual function of creating an electromagnetic field for the motor, I utilize the winding 21 as the primary winding of a transformer to supply electrical energy for energizing an audible alarm 27. As representative of suitable means for accomplishing this object, I have shown a secondary coil 28 wound over the winding 21. The secondary winding 28 can have any desired number of turns and the current induced in the secondary winding, therefore, can have any desired potential. Preferably, the alarm 27 is designed to operate on low voltage, as compared with the voltage required to energize the driving motor of the clock and in practice, therefore, there will be fewer turns in the coil 28 than in the winding 21.

Referring now to Fig. 12 in which I have illustrated a wiring diagram of the system, a pair of conductors L_1 and L_2 are shown which are adapted to be connected to the commercial source of alternating current to energize the stator winding 21 of the clock motor. Inductively coupled to the winding 21 is the winding 28 and the current induced in the winding 28 is adapted to energize the alarm 27 when the switch 29 is closed to complete the alarm circuit. This circuit may be traced from the framework of the clock or ground through the switch 29, winding 28, alarm 27 and back to ground. Since the alarm circuit just traced is inductively coupled to the energizing circuit of the clock and not directly connected thereto, opening of the alarm circuit at the switch 29 or accidental opening or other failure of the alarm circuit cannot affect the energization of the coil 21 in any way and the accuracy of the clock will not be impaired therefore, regardless of the condition of the alarm circuit. Also, since the voltage of the current flowing in the alarm circuit is low, there is no possibility of users of the device receiving an electric shock which may be unpleasant or dangerous arising from grounding of the alarm circuit to the framework of the clock.

The audible alarm 27 in the embodiment illustrated is in the form of an alternating current buzzer having electromagnetic winding disposed about a core 31 of magnetic material. The core 31 is bent or offset at one end, as at 32, and a resilient armature 33 of magnetic material has one end thereof secured to the offset end 32 of the core, the other end of the armature 33 being disposed adjacent the opposite pole of the core 31. When the alarm circuit is closed at the switch 29, the armature 33 is caused to vibrate at a frequency which is determined by the frequency of the current induced in the winding 28.

The switch 29 is adapted to be controlled by the clock mechanism and I have illustrated a preferred form of this switch in detail in Figs. 7 to 11. In the embodiment shown the switch comprises a movable contact 34 which is mounted on one face of a gear 36 connected through a suitable reduction gear train 37 with a shaft 38 which rotates whenever the hands of the clock are rotated. Preferably, the gear ratio is such that the gear 36 carries the contact 34 thereon through one complete revolution each twenty-four hours. Gear 36 is idly disposed upon a shaft 39 between a flange 41 on the shaft and a washer 42 loosely surrounding the shaft. A shoulder 43 on the shaft 39 abuts against the plate 44 on which the switch is mounted and serves as a spacing member between the flange 41 and the plate 44 to prevent clamping of the gear 36 to any of the other parts of the switch mechanism. From the description thus far it will be seen that the gear 36 can rotate with the minute hand of the clock without turning the shaft 39 and that rotation of the shaft 39 will not effect rotation of the gear 36.

The shaft 39 passes through the supporting plate 44 and is mounted for rotational movement relative to the plate. A collar 46 is secured to the shaft 39 by means of a set screw 47 and disposed between the collar 46 and the plate 44 is a flat spring 48 which serves to urge the shoulder 43 resiliently against the plate 44. The spring 48 also serves to increase the friction between the shaft 39 and the plate 44, thereby frictionally retaining the shaft 39 against accidental rotation. A disk 49 of suitable insulating material is rigidly secured to the flange 41 and a switch member 51 is mounted on the disk 49. The switch member 51 has an arcuate portion 52 overlying the disk 49 and spaced therefrom for a portion of its length, as shown in Fig. 9. Near the end of the arcuate portion 52 is a depressed portion 53 which extends through an aperture 54 in the disk 49. The depressed portion 53 constitutes the other switch contact and is adapted to cooperate with the contact 34 to effect the switching operations. The switch member 51 also has a radially extending portion 56 which makes electrical contact with a resilient strip 57 mounted on the plate 44, but insulated therefrom.

The strip 57 can have a lug 58 formed at one end thereof to facilitate making electrical connection between the strip 57 and one end of the electromagnetic coil of the alarm 27. Disposed at either side of the contact 53 are shoulders 61 and 62 which are adapted to be resiliently urged against the insulating disk 49 when the parts of the switch are in the position shown in Fig. 9. When the contact 53 is in this position it extends into the path of contact 34 and the circuit of the alarm will be closed when the contact 34 has been moved to the contacting position by the gear 36.

Manual means is provided, however, for raising the contact 53 out of the path of the contact 34, thereby disabling the switch against closing and permitting the switch to be opened to shut off the alarm after the alarm has served its purpose. For raising the contact 53 I have shown a disk 63 in the form of a sector of a circle overlying the disk 49 and having a pair of radially extending projections 64 and 66. The projections 64 and 66 are disposed at each side of the contact 53 and one of these projections is adapted to be moved under the shoulder 61 or under the shoulder 62 in accordance with the movement of the disk 63. For imparting rotational movement to the disk 63 a shaft 67 is provided which extends through a bore in the shaft 39 and the disk 63 is rigidly secured to the shaft 67 by means of a collar 68. An actuating knob 69 can be provided at the end of shaft 67 to facilitate actuation of the disk 63.

A resilient arm 70 is mounted on the disk 63 and has a projection 71 which is adapted to extend through an aperture 72 in the disk 49 into the path of the contact 34 so that under certain conditions the contact 34 engages the projection 71 to effect movement of the disk 63. For example, when the switch is in the position shown in Fig. 10, the projection 71 extends into the path of the contact 34 and as the contact is moved adjacent the projection 71 a force is exerted on

the disk 63 which moves the same into the position shown in Fig. 9, thereby reconditioning the switch for a subsequent closing operation by permitting the contact 53 to extend into the path of the contact 34.

In the operation of the device the knob 69 is actuated to set the switch in the position shown in Fig. 9. The contact 34 is then carried around by the gear 36 which is driven by the clock in the direction of the arrow in Fig. 9. The contact 34 can pass freely under the projection 71 when the parts are in the position shown and eventually the contact 34 will make engagement with the contact 53 thereby completing the alarm circuit previously traced. The person hearing the alarm can stop the same by actuating the knob 69 to bring the projection 64 under the shoulder 62, thereby lifting the contact 53 out of engagement with the contact 34. When this is done however, the projection 71 is moved into the path of the contact 34 and when the contact 34 engages the projection 71, the disk 63 is again moved to the position of Fig. 9, thereby reconditioning the alarm circuit so that it will be operated twenty-four hours after the first actuation. Thus, the alarm will be actuated at the same time each day, so long as the alarm is shut off by moving the projection 64 under the shoulder 62.

If, on the other hand, the knob 69 is turned in the opposite direction so that the projection 66 is moved under the shoulder 61, the switch will be disabled as before, the parts taking the position shown in Fig. 11. When the parts are in this condition, however, the switch is not reconditioned automatically, since the projection 71 is raised out of the path of the contact 34 and the contact 34 will pass under the contact 53 indefinitely without operating the alarm. After the switch has been indefinitely disabled against closing in this manner, it is necessary to recondition the same manually by actuating the knob 69 in order to restore the parts to the position shown in Fig. 9. Thus, the switch can be temporarily disabled, in which event it will be automatically reconditioned to close the alarm every twenty-four hours, or it can be permanently disabled in the sense that it will remain open indefinitely and must be manually reset before it will again effect a closing operation of the alarm circuit.

For adjusting the switch so that it will operate the alarm at a predetermined time, the collar 46 is rotated to move the entire switch mechanism with the exception of the gear 36 and the contact 34 thereon. By this operation the contact 53 is moved to a different position in the path of the contact 34 and since the position of the contact 34 is determined by the time indicated on the clock, it will be seen that the switch can be closed at any predetermined time of the day by moving the contact 53 to the required position. A suitable indicating disk 72 can be mounted on the collar 46 to indicate the position to which the switch has been set.

Preferably, the entire alarm apparatus, including the alarm 27 and the switching mechanism therefor, is mounted on the single plate 44, thereby enabling attachment or detachment of the apparatus to the clock mechanism, which is mounted on or between a pair of plates 73 and 74, without disturbing the operative condition of the clock. This constructional feature affords convenient assembly of the alarm apparatus to the clock and enables the use of the apparatus with clocks already in existence merely by making slight alterations and providing a casing which is sufficiently large to house both the clock and the alarm apparatus.

By grounding one side of the alarm circuit, as heretofore described, the contact 34 and the gear 36 are connected into the circuit through the plate 44 to one side of the alarm 27 which is also grounded to the plate 44. By this expedient the gear 36 and the shaft 39 do not need to be insulated from the framework. Also, resort to a slip-ring electrical connection between the rotating gear 36 and the remainder of the circuit is avoided. Where the full voltage of the commercial source of current is used to operate an alarm of this type, it would be impractical and even dangerous to human life to connect one side of the circuit to the framework of the clock, especially when the side of the circuit connected to the clock is not the grounded side of the source of current. With my invention, however, while the current for operating the alarm is derived from the commercial source of current, the circuits are distinct and separate, thereby obviating any danger that might otherwise exist.

While I have shown and described a preferred embodiment of my invention, I do not wish to be limited thereto, since the invention as defined in the appended claims can be embodied in a plurality of other forms.

I claim:

1. In an electric clock, an alarm, an alarm circuit for energizing said alarm, and a switch for controlling said alarm circuit; said switch comprising a movable contact actuated by the clock mechanism and connected in said alarm circuit, a member having a fixed contact thereon disposable into and removable from the path of said movable contact for closing and opening said alarm circuit, and manually operable means connected to said member and movable in one direction to remove said fixed contact temporarily from the path of said movable contact and movable in another direction to remove said fixed contact indefinitely from the path of said movable contact.

2. In an electric clock having a casing, a plate removably supported in said casing, an alarm mounted on said plate, an alarm circuit including said casing and said plate for energizing said alarm, and a switch for controlling said alarm circuit and mounted upon said plate; said switch comprising a movable contact, means in said alarm circuit connecting said movable contact with the clock mechanism so that said movable contact is controlled by the clock mechanism, a member having a fixed contact thereon and movable to dispose said fixed contact into and to remove said fixed contact from the path of said movable contact, and manually operable means connected to said member and movable selectively to remove said fixed contact from the path of said movable contact either temporarily or indefinitely.

WILLIAM M. BROWER.