O. B. MONOSMITH.

CARBURETER.

APPLICATION FILED JULY 7, 1913.

1,110,453.

Patented Sept. 15, 1914.

FIG. 1

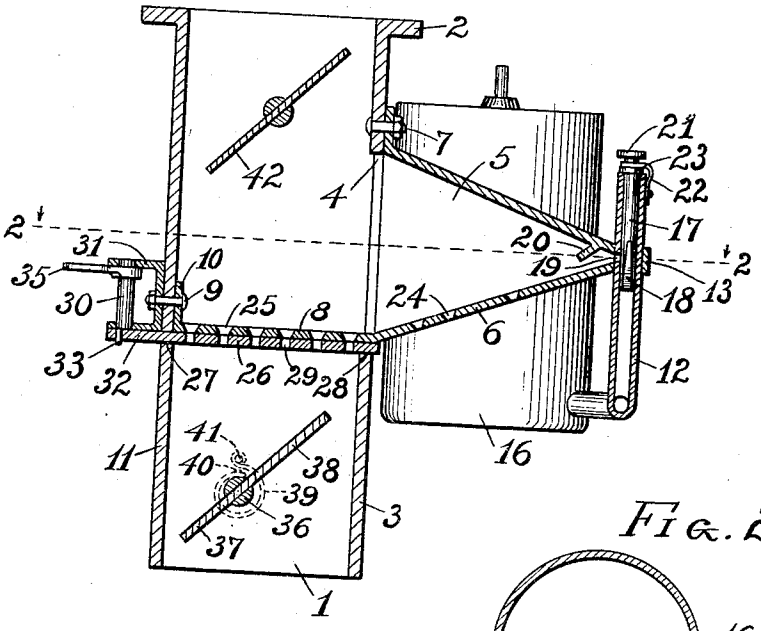

FIG. 2

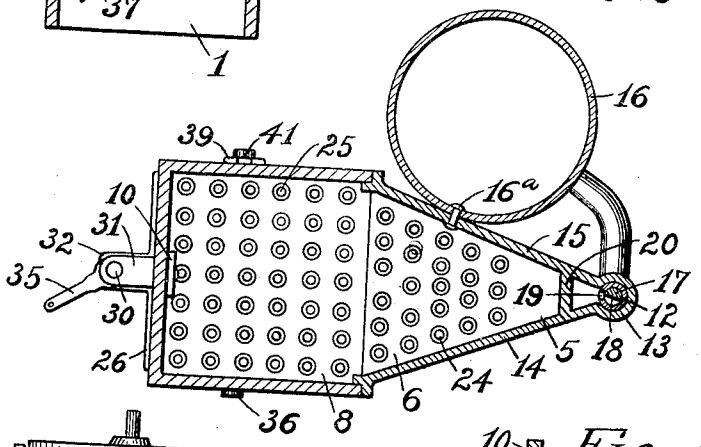

FIG. 3

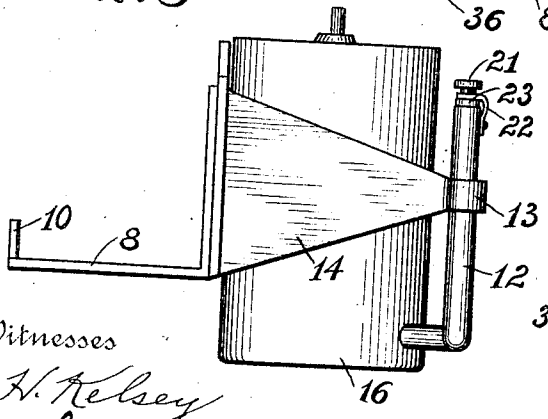

FIG. 4

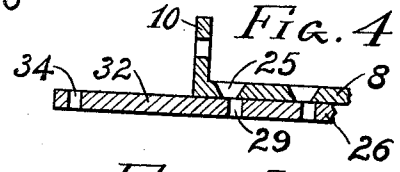

FIG. 5

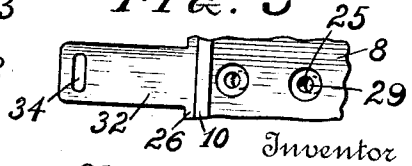

Witnesses

W. H. Kelsey

A. Sidley

Inventor

Olney B. Monosmith

By Ehlunstan

his Attorney

UNITED STATES PATENT OFFICE.

OLNEY B. MONOSMITH, OF LORAIN, OHIO.

CARBURETER.

1,110,453. Specification of Letters Patent. Patented Sept. 15, 1914.

Application filed July 7, 1913. Serial No. 777,637.

To all whom it may concern:

Be it known that I, OLNEY B. MONOSMITH, a citizen of the United States, residing at Lorain, in the county of Lorain and State of Ohio, have invented certain new and useful Improvements in Carbureters, of which the following is a specification.

This invention relates to improvements in carbureters for internal-combustion engines, and especially to a carbureter for an automobile engine.

The main object of the invention is to provide a carbureter consisting of a few simple inexpensive and easily assembled parts, which is efficient in operation for different speeds of the engine and economical in the use of gasolene.

It is well known that when gasolene is poured or allowed to drip upon a flat surface, it will quickly spread itself thereover by a sudden stop and start action into a very thin film. This peculiar tendency of gasolene to cover a surface instantaneously in a very thin film is used to advantage in my present invention by permitting air to mix with said thin film of gasolene, and thereby supply the most efficient and economical mixture of gas for the engine.

With the above and other objects in view as will be understood, the invention will be hereinafter fully described in connection with the accompanying drawings, which illustrate a preferred embodiment thereof, and the novel features will then be distinctly pointed out in the appended claims.

In the drawings like characters of reference indicate similar parts.

Figure 1 is a sectional elevation of a carbureter embodying my invention, Fig. 2 is a section taken on line 2—2 of Fig. 1, Fig. 3 is a side view of the gasolene flow box, Fig. 4 illustrates the means for reducing the size of the perforations in the horizontal plate of the gasolene flow box, and Fig. 5 is a plan view of Fig. 4.

Referring to the drawings, 1 represents an air passage arranged vertically, and preferably made square in cross section with a flange 2 at its upper end for connecting to the inlet of an internal-combustion engine. The side of the air passage is provided with a rectangular opening 4, over which is arranged a gasolene flow box 5 preferably pyramidical in shape with one of its sides as 6 forming the bottom thereof. Said bottom serves the purpose of a spray plate as will be hereinafter explained. The larger end of the box 5 is removably fixed to the side of the air passage as indicated at 7, and extending horizontally from the inner end of its inclined bottom 6 is a spray plate or diaphragm 8, which is of the same width as the inside of the air passage for sliding therein. The inner end of the spray plate 8 is removably connected to the inside of the air passage by means of a bolt 9, which passes through a lug 10 projecting from said spray plate and also through the side 11 of the air passage. To the outer and smaller end of the gasolene flow box 5 is attached a vertical tube 12, preferably by forming a socket 13 integral with the sides 14 and 15 of said box, which tube leads to a float chamber 16 of ordinary construction. The float chamber is supported from the side 15 of the gasolene flow box, to which it is rigidly connected at 16^a, in order to be removable therewith. In the upper open end of the vertical tube 12 is rotatably mounted a valve 17 having a cut-away side 18, for controlling the flow of gasolene through the fuel opening 19 of said tube into the gasolene flow box 5. An inclined baffle-plate 20 is arranged across the upper portion of said box in front of the fuel opening 19. The gasolene issuing from said fuel openings drips upon the inclined spray plate 6 of said box under normal conditions, but at high speed of the engine on account of the increased pressure in the flow, the stream of gasolene first strikes against the baffle-plate 20 and is deflected thereby upon the inclined spray plate of the box. The valve 17 may be adjusted to give the proper flow by turning its head 21, and the same is held in its set position by means of a spring 22 fastened to the tube 12 with its free end bearing upon the collar 23 of the valve.

The inclined spray plate 6 of the gasolene flow box 5, beginning preferably a little distance from the fuel opening 19, is provided with a plurality of perforations 24, and the horizontal spray plate 8 is also perforated as shown at 25. The perforations 24 and 25 are countersunk or made tapering from their upper ends, to give a venturi action to the air currents entering at their smaller ends. This action of the inrushing air will cause the thin film of gasolene on the surface around the perforations to be drawn into the air currents and mixed therewith. It will be noted that as the spray plate 6 is

inclined, the air currents entering the perforations thereof will more directly mix in the air passage with the air currents passing through the perforations in the horizontal spray plate 8.

It is desirable to regulate the size of the perforations 25 in the spray plate 8 to control the amount of air admitted, and especially to reduce the area of the same upon starting the engine to increase the vacuum in the air passage. This increases the flow of the gasolene from the fuel opening 19, and at the same time increases the spraying action of both the inclined and horizontal spray plates. This is accomplished by means of a slide plate 26, which is arranged below the horizontal spray plate 8 by passing through a transverse slot 27 in the side 11 of the air passage, and having its other end supported upon the lower edge 28 of the opening 4 in its opposite side 3. This slide plate is provided with perforations 29, correspondingly positioned as are those in the horizontal spray plate 8 in order to normally aline therewith, and the same size as the smaller ends of the countersunk perforations 25. It will be understood that when the slide plate 26 is moved inwardly, the perforations 25 will be correspondingly reduced as illustrated in Figs. 4 and 5, or may be entirely closed. Said slide plate is actuated by means of a vertical eccentric pin 30, which is rotatably mounted in the upper and lower horizontal arms of a bracket 31 removably fixed to the side 11 of the air passage by the before mentioned bolt 9. Said eccentric pin rests upon a reduced extension 32 of the slide plate 26, and depending from its lower end is an eccentric 33 which passes through a transverse slot 34 in said extension of the slide plate. A lever 35, for rotating the eccentric pin to move the slide plate longitudinally, is fixed to said pin adjacent the under side of the upper arm of the bracket 31 to retain the pin in the bracket. The lever 35 may be operated from the dash-board of the vehicle in any suitable manner.

The inlet of the air passage 1 is automatically controlled by means of a spring balanced valve. This valve consists of a spindle 36, which is pivoted in the sides of the air passage a little to one side of its vertical center and carrying wings 37 and 38 of unequal lengths. For the purpose of assisting the shorter wing 37 to equally balance the longer wing 38, so that inrushing air by exerting greater pressure upon the larger area of the wing 38 will swing the valve open, a helical spring 39 is fixed to the projecting end of the spindle 36 at 40 and also to the outer side of the air passage at 41. An ordinary butterfly valve 42 may be provided for controlling the outlet of the air passage.

The operation follows: When it is desired to start the engine, the slide plate 26 is moved to partially cover the perforation 25 and the valve 17 adjusted to give the proper flow of gasolene through the fuel opening 19. The gasolene flows onto the unperforated portion of the inclined spray plate 6 of the box 5, and instantaneously spreads itself in a very thin film over the surface of said spray plate and the horizontal spray plate 8. As air from the outside rushes through the perforations 24, it draws by suction said very thin film of gasolene around said perforations into the air currents, thereby vaporizing the gasolene and mixing therewith to form an efficient mixture which flows into the air passage 1 and from the outlet thereof to the engine. The slide plate 26 is then actuated to uncover the perforations 25, and the inrush of air through the open end of the air passage will enter said perforations and act upon the very thin film of gasolene in the same manner as first described, thereby giving a most efficient and economical mixture.

It will be understood, that minor changes in the details of construction may be made without departing from the principle of the invention and within the scope of the claims.

Having fully described my invention, what I claim is:

1. In a carbureter, the combination with an air passage of a plate arranged transversely therein, the plate being provided with perforations, means for supplying a volatile fluid to a surface of the plate, and means for uniformly controlling the area of said perforations in the plate, substantially as described.

2. In a carbureter, the combination with an air passage, of a plate arranged transversely therein, the plate being provided with perforations, the perforations having tapering sides and being larger at the opposite surface of the plate from the direction of the air current in said air passage to produce a venturi action, and means for supplying a volatile fluid to the surface of said plate having the larger areas of said tapering perforations, substantially as described.

3. In a carbureter, the combination with a vertical air passage, of a plate arranged transversely therein, the plate being provided with perforations, the perforations having tapering sides and being larger at the upper surface of the plate, means for supplying a volatile fluid to the upper surface of said plate, and means for controlling the area of said perforations in the plate, substantially as described.

4. In a carbureter, the combination with a vertical air passage, of a plate arranged transversely therein, the plate being provided with perforations, the perforations having tapering sides and being larger at the

upper surface of the plate, means for supplying a volatile fluid to the upper surface of said plate, a slide plate below the first mentioned plate and in contact therewith, the slide plate being perforated to normally aline with the perforations in the first mentioned plate, and means for actuating the slide plate to control the area of the perforations in the first mentioned plate, substantially as described.

5. In a carbureter, the combination with an air passage, of a box projecting laterally therefrom and communicating therewith, one side of the box being provided with perforations, and means for supplying the inner surface of the perforated side of the box with a volatile fluid, substantially as described.

6. In a carbureter, the combination with a vertical air passage, of a box projecting from the side of the air passage and communicating therewith, the box having an inclined bottom, the bottom of the box being provided with perforations, means for supplying a volatile fluid, and a baffle-plate arranged to direct the volatile fluid upon the upper portion of the bottom of said box, substantially as described.

7. In a carbureter, the combination with a vertical air passage, of a box projecting from the side of the air passage and communicating therewith, the box having an inclined bottom, the bottom of the box being provided with perforations, the perforations having tapering sides and being larger at the inner surface of the bottom, a vertical pipe fixed to said box at its outer end and having a lateral opening for supplying a volatile fluid to the upper portion of the inner surface of said box, and an adjustable valve for controlling the flow of the volatile fluid upon said bottom, substantially as described.

8. In a carbureter, the combination with a vertical air passage, of a box arranged at the side of the air passage and communicating therewith, the box having an inclined bottom, the bottom of the box being provided with perforations, a plate extending from the bottom of the box and across said air passage, the plate being perforated, and means for supplying a volatile fluid to the upper portion of the bottom of said box, substantially as described.

9. In a carbureter, the combination with a vertical air passage, of a box arranged at the side of the air passage and communicating therewith, the box having an inclined bottom, the bottom of the box being provided with perforations, a plate extending from the bottom of the box and across said air passage, the plate being perforated, means for controlling the area of the perforations in said plate, and means for supplying a volatile fluid to the upper portion of the bottom of said box, substantially as described.

10. In a carbureter, the combination with a vertical air passage, of a box arranged at the side of the air passage and communicating therewith, the box having an inclined bottom, the bottom of the box being provided with perforations, a plate extending from the bottom of the box and across said air passage, the plate being perforated, means for controlling the area of the perforations in said plate, an automatic valve for controlling the inlet of the air passage, a valve at the outlet of the air passage, and means for supplying a volatile fluid to the upper portion of the bottom of said box, substantially as described.

11. In a carbureter, the combination with a vertical air passage, of a box arranged at the side of the air passage and communicating therewith, the box having an inclined bottom, the bottom of the box being provided with perforations, a plate extending from the bottom of the box and across said air passage, the plate being perforated a butter-fly valve eccentrically pivoted in the inlet end of the air passage and having one wing longer than its other, a spring for balancing the valve, and means for supplying a volatile fluid to the upper portion of the bottom of said box, substantially as described.

12. In a carbureter, the combination with a vertical air passage having an opening in one side, of a box arranged to cover the opening and being removably fixed to the air passage, the box being pyramidical in cross section with one of its sides forming a spray plate, the spray plate of the box being provided with perforations, a spray plate extending from the spray plate of the box and across said air passage, the second mentioned spray plate being perforated, a float chamber supported by said box, and a tube leading from the float chamber to supply a volatile fluid to the inner surface of the spray plate of said box, substantially as described.

13. In a carbureter, the combination with a vertical air passage, of a plate arranged transversely therein, the plate being provided with perforations, means for supplying a volatile fluid to the upper surface of said plate, a slide plate below the first mentioned plate and in contact therewith, the slide plate being perforated to normally aline with the perforations in the first mentioned plate, a bracket supported by the air passage, an eccentric pin pivoted in the bracket, said slide plate being provided with a transverse slot for receiving the eccentric pin, and means for rotating the eccentric pin to cause movement of the slide plate, substantially as described.

14. In a carbureter, the combination with

a vertical air passage, of a plate arranged transversely therein, the plate being provided with perforations, means for supplying a volatile fluid to the upper surface of said plate, a slide plate below the first mentioned plate and in contact therewith, the slide plate being perforated to normally aline with the perforations in the first mentioned plate, a portion of the slide plate projecting through a wall of the air passage, a bracket supported on the outside of the air passage adjacent the projecting portion of the slide plate, an eccentric pin pivoted in the bracket, the projecting portion of said slide plate being provided with a transverse slot for receiving the eccentric pin, and means for rotating the eccentric pin to cause movement of the slide plate, substantially as described.

15. In a carbureter, the combination with a vertical air passage, of a box projecting from the side of the air passage and communicating therewith, the box having an inclined bottom, the bottom of the box being provided with perforations, the perforations in the bottom having tapering sides and being larger at the inner surface of the bottom, a plate extending from the bottom of the box and across said air passage, the plate being perforated, the perforation in said plate having tapering sides and being larger at the upper surface of the plate, and means for supplying a volatile fluid to the upper portion of the bottom of said box, substantially as described.

In testimony whereof I affix my signature in presence of two witnesses.

OLNEY B. MONOSMITH.

Witnesses:
N. P. WHELAN,
W. H. KELSEY.