Sept. 15, 1925. 1,554,140

A. W. SVENSON

APPARATUS FOR ASSORTING COINS

Filed April 7, 1925 3 Sheets-Sheet 1

Fig. 1.

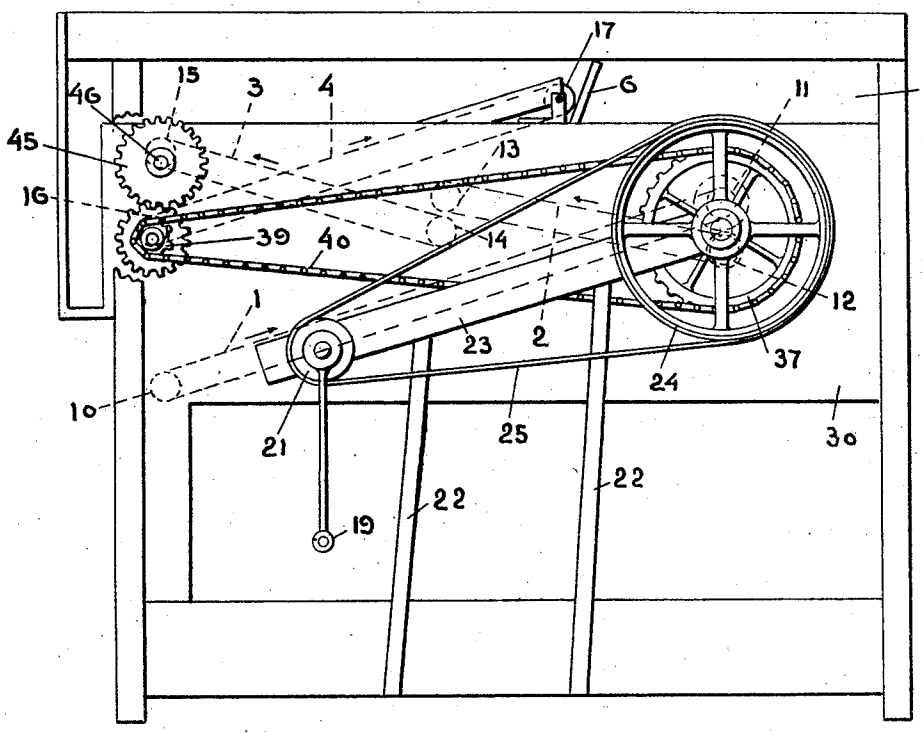

Fig. 3.

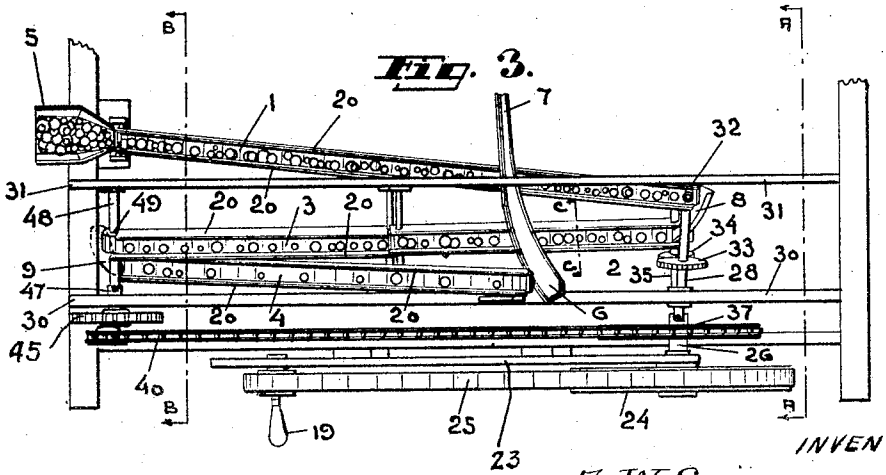

INVENTOR.

A. W. Svenson.

By William C. Linton
Atty.

Sept. 15, 1925. 1,554,140

A. W. SVENSON

APPARATUS FOR ASSORTING COINS

Filed April 7, 1925 3 Sheets-Sheet 2

Fig. 10.

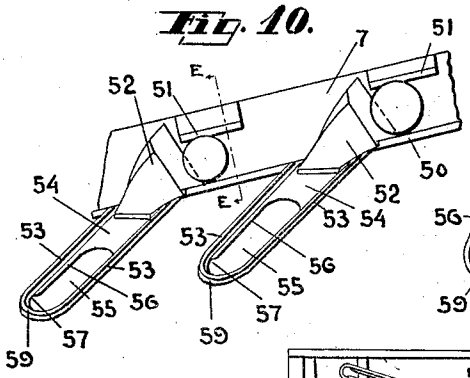

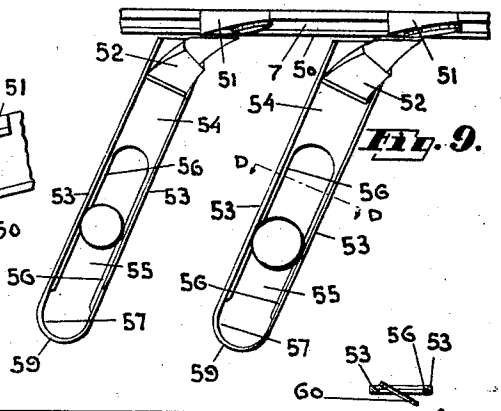

Fig. 9.

Fig. 11.

Fig. 12.

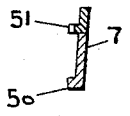

Fig. 2.

INVENTOR.

A. W. Svenson

By William C. Linton

Atty.

Sept. 15, 1925. 1,554,140

A. W. SVENSON

APPARATUS FOR ASSORTING COINS

Filed April 7, 1925 3 Sheets-Sheet 3

Fig. 4.

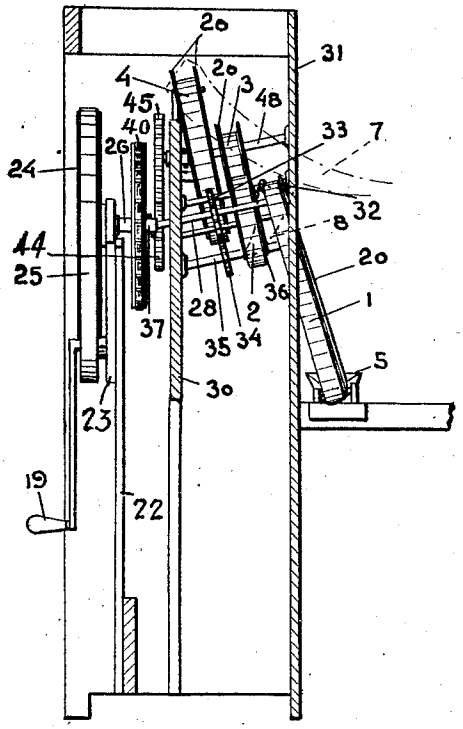

Fig. 5.

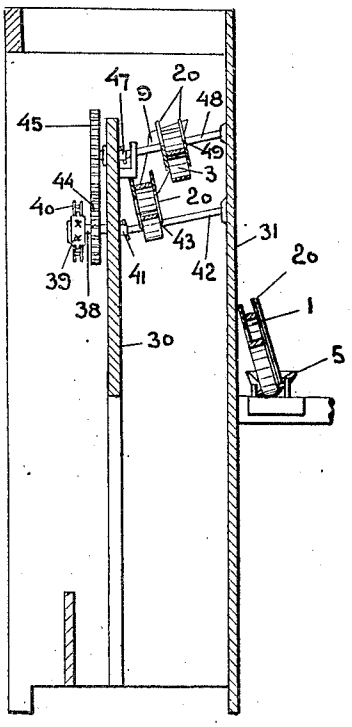

Fig. 6.

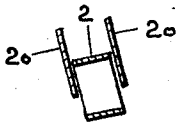

Fig. 7.

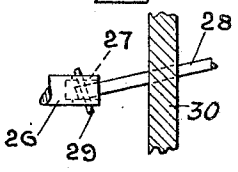

Fig. 8.

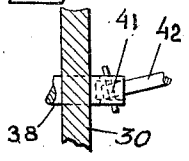

INVENTOR

A. W. Svenson.

By William C. Linton

Atty.

Patented Sept. 15, 1925. 1,554,140

UNITED STATES PATENT OFFICE.

ANDERS WERNER SVENSON, OF VANERSBORG, SWEDEN.

APPARATUS FOR ASSORTING COINS.

Application filed April 7, 1925. Serial No. 21,407.

To all whom it may concern:

Be it known that I, ANDERS WERNER SVENSON, a subject of the King of Sweden, residing at Vanersborg, Sweden, have invented certain new and useful Improvements in Apparatus for Assorting Coins; and I do hereby declare that the following is a full, clear, concise, and exact description of the invention, such as will enable others skilled in the art to which it appertains, to make and use the same.

The present invention relates to such apparatus for assorting coins according to their respective denominations which are provided with an inclined rail or track along which the coins are caused to roll down and from which the same are by means of diverting members, placed at successively decreasing height above the roll track, diverted at different points so as to drop down in a number of receivers.

The main object of the invention is to provide means for an automatic separation of the coins from each other before they are placed on the roll track, which is a necessary condition for the satisfactory function of the apparatus.

A further object of the invention is to provide means for an automatic separation of reformed coins and such foreign coins the sizes of which lie between the sizes of the coins for which the apparatus is intended.

In order that the invention may be clearly understood, reference is made to the accompanying drawings, in which—

Fig. 1 is a side view of the apparatus. Fig. 2 is a plan view of the apparatus. Fig. 3 is a plan view of a part of the apparatus with the cover plate covering this part removed in order to exhibit the interior. Fig. 4 is a section along the line A—A in Fig. 3. Fig. 5 is a section along the line B—B in Fig. 3. Fig. 6 is a section along the line C—C in Fig. 3. Figs. 7 and 8 show on a larger scale two shaft-coupling used in the apparatus. Fig. 9 is a plan view on a larger scale of a portion of the roll track, with the means for separating foreign and deformed coins. Fig. 10 is a front view of the parts shown in Fig. 9. Fig. 11 is a cross-section along the line D—D in Fig. 9, and Fig. 12 is a section along the line E—E of Fig. 10.

In the drawings 1, 2, 3 and 4 respectively denote endless transport bands of rubber or other suitable material, which bands are adapted to forward the coins to be assorted from a plate or table 5, from which the coins are brought by hand upon the transport band 1, up to the upper end 6 of a roll track 7 which will hereinafter be further described.

In order to separate from each other coins eventually placed upon each other all of the transport bands 1, 2, 3 and 4 are disposed inclining on the one hand to the forwarding direction and, on the other hand laterally. Further, the upper end of one transport band is disposed above the lower end of the succeeding transport band, so as to cause the coins to drop down from one transport band upon the following whereby between the upper end of the transport band 1 and the lower end of the transport band 2 a guide plate 8 is provided for guiding the coins down to the transport band 2. A similar guide plate 9 is disposed between the upper end of the transport band 3 and the lower end of the transport band 4. Each of the transport bands runs around two rolls, the one of which is running freely while the other one is driven either by hand or by means of an electric motor. Thus, the transport band 1 runs over the rolls 10 and 11, the transport band 2 over the rolls 12 and 13, the transport band 3 over the rolls 14 and 15 and the transport band 4 over the rolls 16 and 17, of which rolls the rolls 11, 12, 15 and 16 according to the embodiment of the invention shown in the drawings are driven by a common hand-crank 19 by means of transmissions hereinafter described. In order to prevent the coins dropping down laterally from the transport bands, plates 20 are disposed along the sides of the upper parts of the transport bands, which plates together with the upper parts of the transport bands form a kind of a channel, as clearly appears from Fig. 6.

The crank 19 which is provided to drive the transport bands is fixed to a belt pulley 21 rotatably mounted at the one end of a rod 23 carried by two brackets 22. At the other end of the rod 23 there is rotatably mounted a greater belt pulley which is driven from the belt pulley 21 by means of a belt 25. The end of the shaft 26 of the belt pulley 24 is provided with an axial groove 27, Fig. 7, which cooperates with a cross-pin 29 fixed at the one end of a shaft 28, so that the rotation of the shaft 26 will be transmitted to the shaft 28. This shaft 28 is

rotatably mounted in two walls 30 and 31, constituting parts of the frame of the apparatus, and carries at 32 the roll 11 which drives the transport band 1. The shaft 28 further carries a toothed wheel 33 which drives a smaller toothed wheel 34 fixed on a shaft 35 rotatably mounted in the walls 30 and 31, which shaft 35 at 36 also carries the roll 12 adapted to drive the transport band 2.

Besides the belt pulley the shaft 26 also carries a sprocket wheel 37 the rotation of which by a chain 40 is transmitted to a small sprocket wheel 39 the shaft 38 of which is rotatorily mounted in the wall 30. By means of a coupling 41, Fig. 8, of the same type as the coupling shown in Fig. 7, the rotation of the shaft 38 is transmitted to a shaft 42 rotatably mounted in the wall 31 and at 43 carrying the roll 16 which drives the transport band 4, Fig. 5.

Besides the sprocket wheel 39 the shaft 38 also carries a toothed wheel 44 which drives a slightly larger toothed wheel 45 which is fixed upon a shaft 46 rotatably mounted in the wall 30. The rotation of the shaft 46 is by means of a coupling 47 of the same type as the couplings shown in Figs. 7 and 8 transmitted to a shaft 48 rotatably mounted in the wall 31, which shaft 48 at 49 carries the roll 15 which drives the transport band 3. The shafts 28, 35, 42 and 48 of the driving rolls as well as the shafts which carry the freely running rolls 10, 13, 14 and 17 are disposed obliquely, so that all of the transport bands will get the above mentioned lateral inclination.

According to the embodiment shown in the drawings, all of the rolls are of the same diameter and owing to the fact that the toothed wheel 33 is of a greater diameter than the toothed wheel 34 the roll 12 and subsequently the transport band 2 thus will run more rapidly than the roll 11 and the transport band 1. Owing to the mutual difference in size between the toothed wheels 44 and 45 the transport band 4 will run with a greater rapidity than the transport band 3. Finally, the ratio of gearing between the sprocket wheels 37 and 39 is so chosen that the transport band 3 will run with a greater rapidity than the transport band 2. Thus, a subsequent transport band will run more rapidly than a preceding, which causes the coins during the forwarding by the transport bands to be separated from each other in such a way, that the coins one by one will drop down from the upper end of the transport band 4 upon the roll track 7.

The roll track or rail 7 is obliquely disposed in the direction of its length as well as laterally, Figs. 10 and 12 respectively, and at its lower edge provided with a laterally projecting flange 50, upon which the coins dropped down from the transport band 4 roll down one by one. To the track or rail 7 there are in a known manner fixed a number of wedge-shaped diverting members 51 which are provided at successively decreasing height above the the flange 50 in such a manner, that coins of the largest size will at first be diverted from the flange 50 by the diverting member situated uppermost at the rail, thereafter, by the next diverting member coins of next size, and so on.

The coins diverted from the rail or roll track are caught by guiding members 52 each of which is adapted to guide the coins caught to a glide plate or track 54 inclined to the direction of its length and at its sides provided with upwardly projecting edges 53. The guiding members 52 are adapted to transfer the coins caught in a rotating, vertical state to a gliding, horizontal state.

The guiding members 32 may be of any suitable shape, and for instance, as shown in the drawings, consist of a funnel-shaped and in cross-section rectangular duct or plate, or the like.

The glide tracks or plates 54 are for a part of their length provided with an opening 55 with such a lateral extension that within each of the edges 53 a narrow flange 56 is formed. The openings 55 are at the lower end of the glide plates 54 provided with an enlargement 57, and below these enlargements there are disposed a number of receptacles 58 for the coins. The glide plates are at their ends provided with an upwardly projecting flange 59.

The lateral extension of the openings 55 and the distance between the edges 53 are so chosen that such coins as are of a size corresponding to the size of that species of coin which is to be received by the receptacle 58 may, with their edges resting upon the flanges 56, glide over the opening 55 and drop down through the enlargement 57 into the corresponding receptacle, while coins of a smaller size or deformed coins drop down through the opening 55, thus being automatically separated, as appears from Fig. 11, in which 60 denotes a coin dropping down.

What I claim, and desire to secure by Letters Patent, is:—

1. The combination with a coin assorting device including a roll track, of a coin conveying apparatus comprising a frame, a plurality of endless coin transport bands mounted upon said frame adapted to forward the coins to the upper end of said roll track, said transport bands being inclined laterally and in their forwarding direction, and one end of each band being disposed above the adjacent band whereby the coins may drop from one band upon a subsequent band.

2. A conveying apparatus for coin assorting devices comprising a support, a plurality of endless coin transport bands carried by said support, one end of each transport

band being disposed above the lower end of the succeeding transport band, a table for delivering the coins to one of said transport bands, means whereby the coins may be delivered from one transport band to the succeeding transport band, and a roll track for receiving the coins from the upper end of the last succeeding transport band.

3. A coin conveying apparatus for coin assorting devices comprising a frame, a plurality of coin transport bands mounted within said frame, means for driving each succeeding transport band with greater rapidity than the preceding transport band, and a roll track adapted to receive the coins from the transport band travelling at the greater rapidity.

4. A coin conveying apparatus for coin asorting devices comprising a frame, a plurality of laterally inclined shafts journalled within said frame, endless belts carired by said shafts, guides arranged on the opposite sides of said endless belts, said endless belts being arranged in inclined plates whereby the uppermost end of one belt extends above the lowermost end of the preceding belt, and means mounted on said frame for driving several of said inclined shafts whereby a subsequent belt will travel more rapidly than a preceding belt.

In witness whereof I have hereunto set my hand.

ANDERS WERNER SVENSON.