US00D411181S

United States Patent [19]

Tamaki et al.

[11] Patent Number: Des. 411,181

[45] Date of Patent: ** Jun. 22, 1999

[54] **ELECTRONIC COMPUTER**

[75] Inventors: **Hidetoshi Tamaki**; **Tamiko Kuwahara**, both of Nara-ken, Japan

[73] Assignee: **Sharp Kabushiki Kaisha**, Osaka, Japan

[**] Term: **14 Years**

[21] Appl. No.: **29/089,902**

[22] Filed: **Jun. 25, 1998**

[30] **Foreign Application Priority Data**

Dec. 26, 1997 [JP] Japan 9-80133

[51] **LOC (6) Cl.** **14-02**

[52] **U.S. Cl.** **D14/100**

[58] **Field of Search** D14/100, 106, D14/115; D18/1, 2, 7; 345/156, 168, 169, 172, 173, 87; 364/708.1; 349/12; D19/26

[56] **References Cited**

U.S. PATENT DOCUMENTS

D. 357,000	4/1995	Takahashi	D14/100
D. 376,351	12/1996	Matsumoto	D14/100
5,555,157	9/1996	Moller et al.	361/683

Primary Examiner—Freda Nunn
Attorney, Agent, or Firm—Nixon & Vanderhye

[57] **CLAIM**

The ornamental design for an electronic computer, as shown and described.

DESCRIPTION

FIG. **1** is a top, front and right side perspective view of an electronic computer according to our design;
FIG. **2** is a rear elevational view thereof;
FIG. **3** is a left side elevational view thereof;
FIG. **4** is a bottom plan view thereof;
FIG. **5** is a front elevational view thereof;
FIG. **6** is a right side elevational view thereof;
FIG. **7** is a top plan view thereof;
FIG. **8** is a view similar to FIG. **1** illustrating the electronic computer in an open position;
FIG. **9** is a rear elevational view thereof;
FIG. **10** is a left side elevational view thereof;
FIG. **11** is a top plan view thereof;
FIG. **12** is a front elevational view thereof;
FIG. **13** is a right side elevational view thereof; and,
FIG. **14** is a bottom plan view thereof.

1 Claim, 10 Drawing Sheets

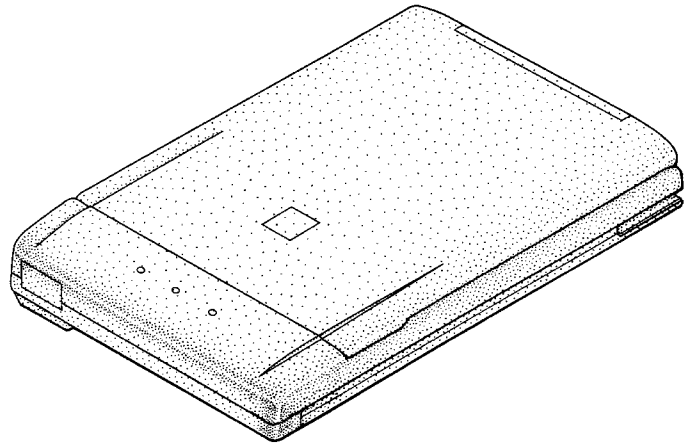

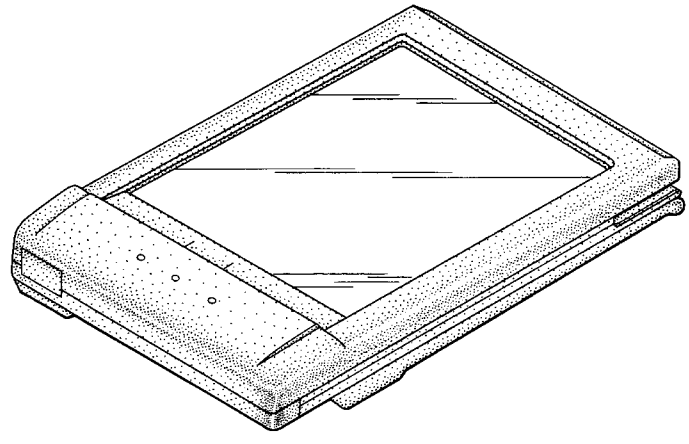

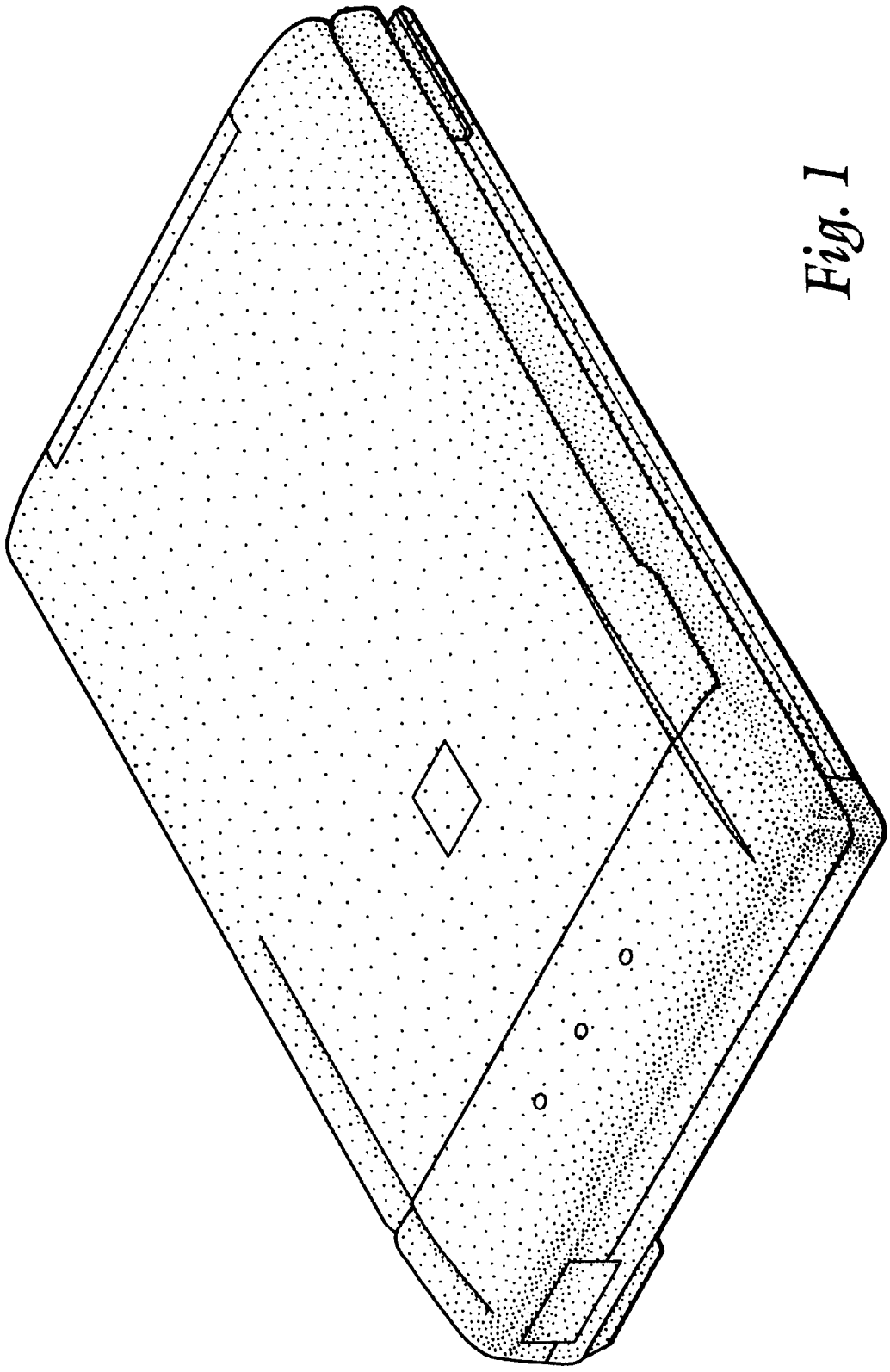

Fig. 1

Fig. 2

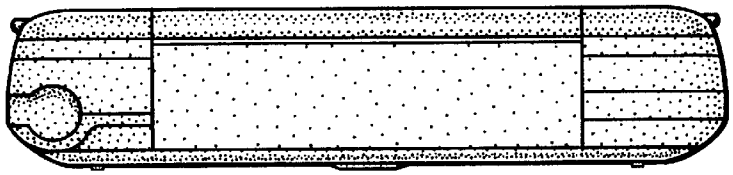

Fig. 3

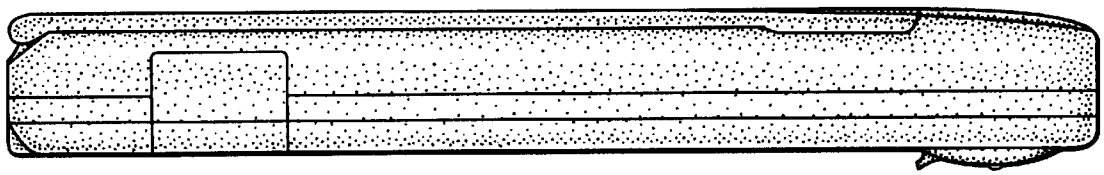

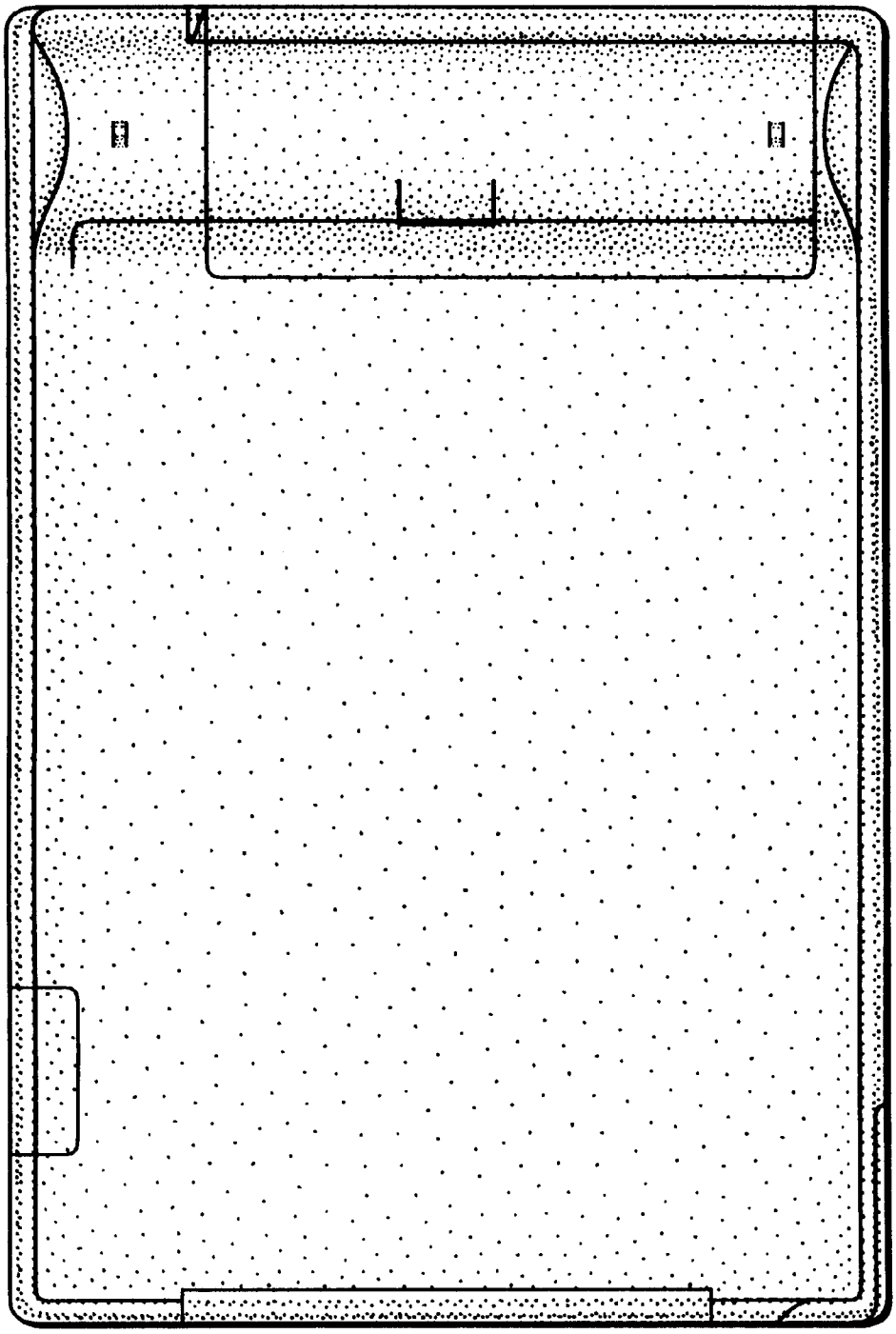

Fig. 4

Fig.5

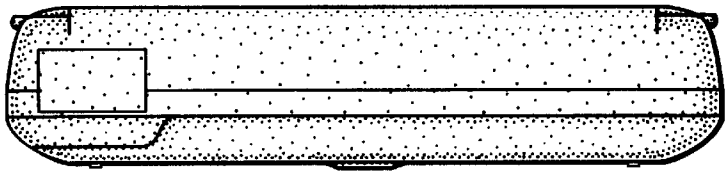

Fig. 6

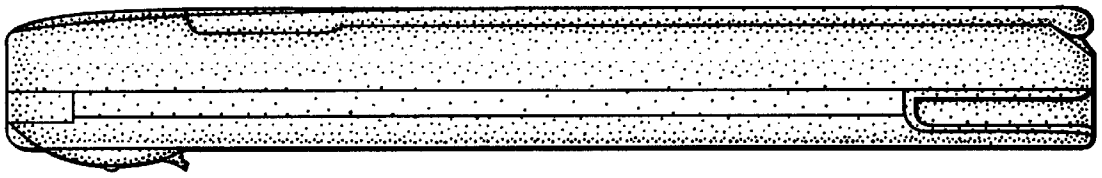

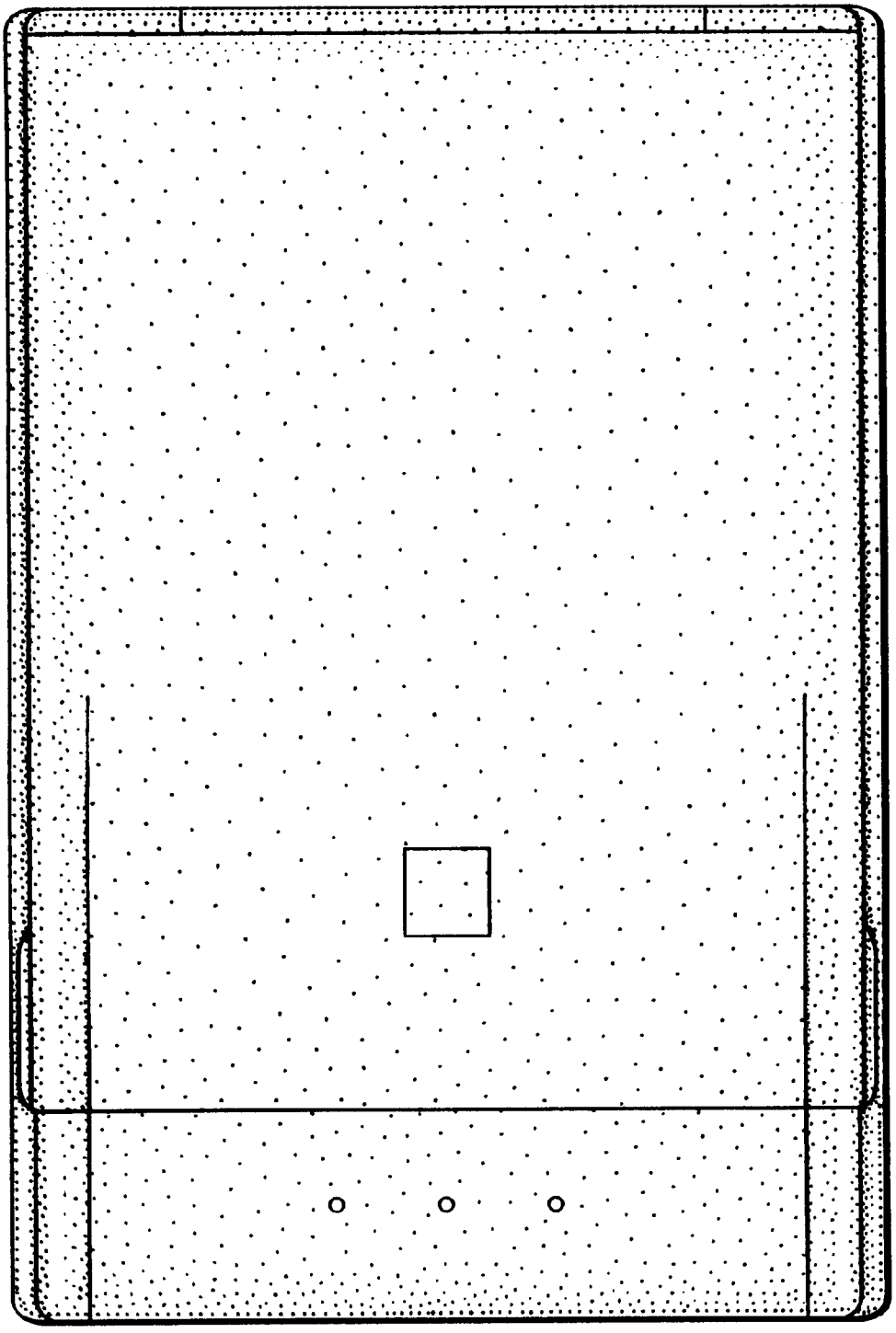

Fig. 7

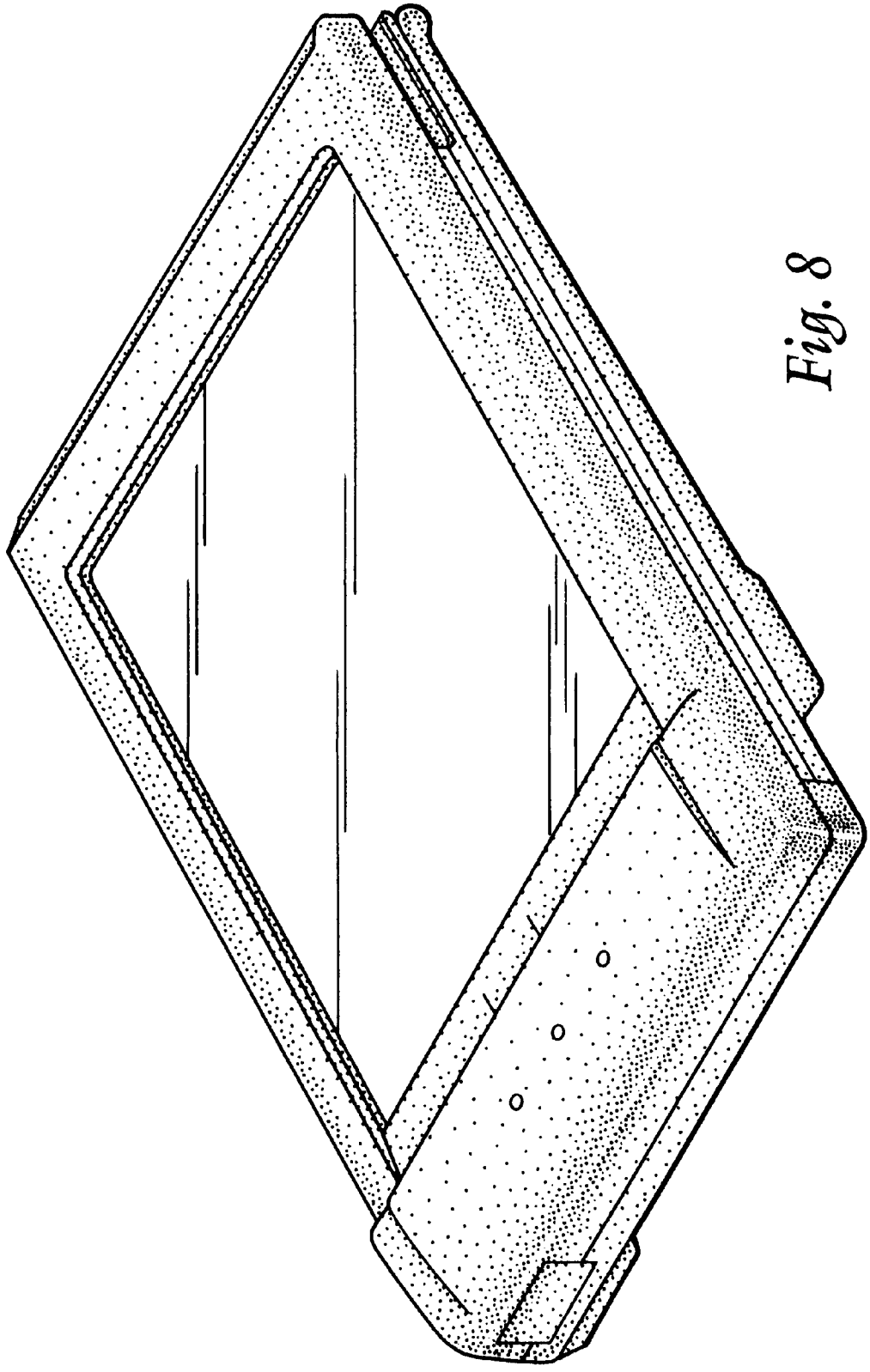

Fig. 8

Fig. 9

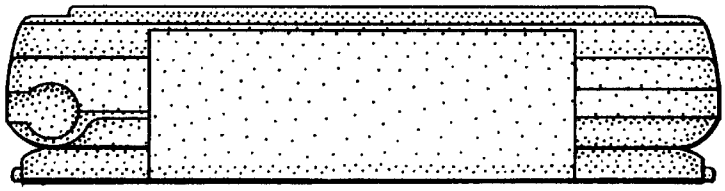

Fig. 10

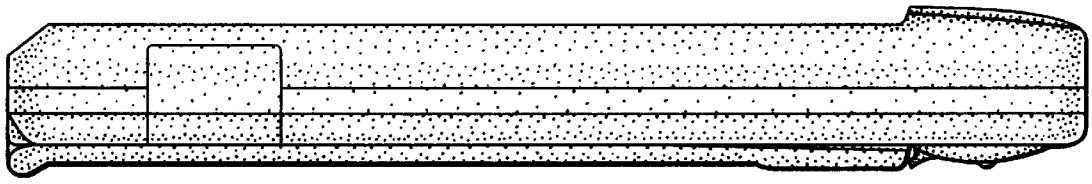

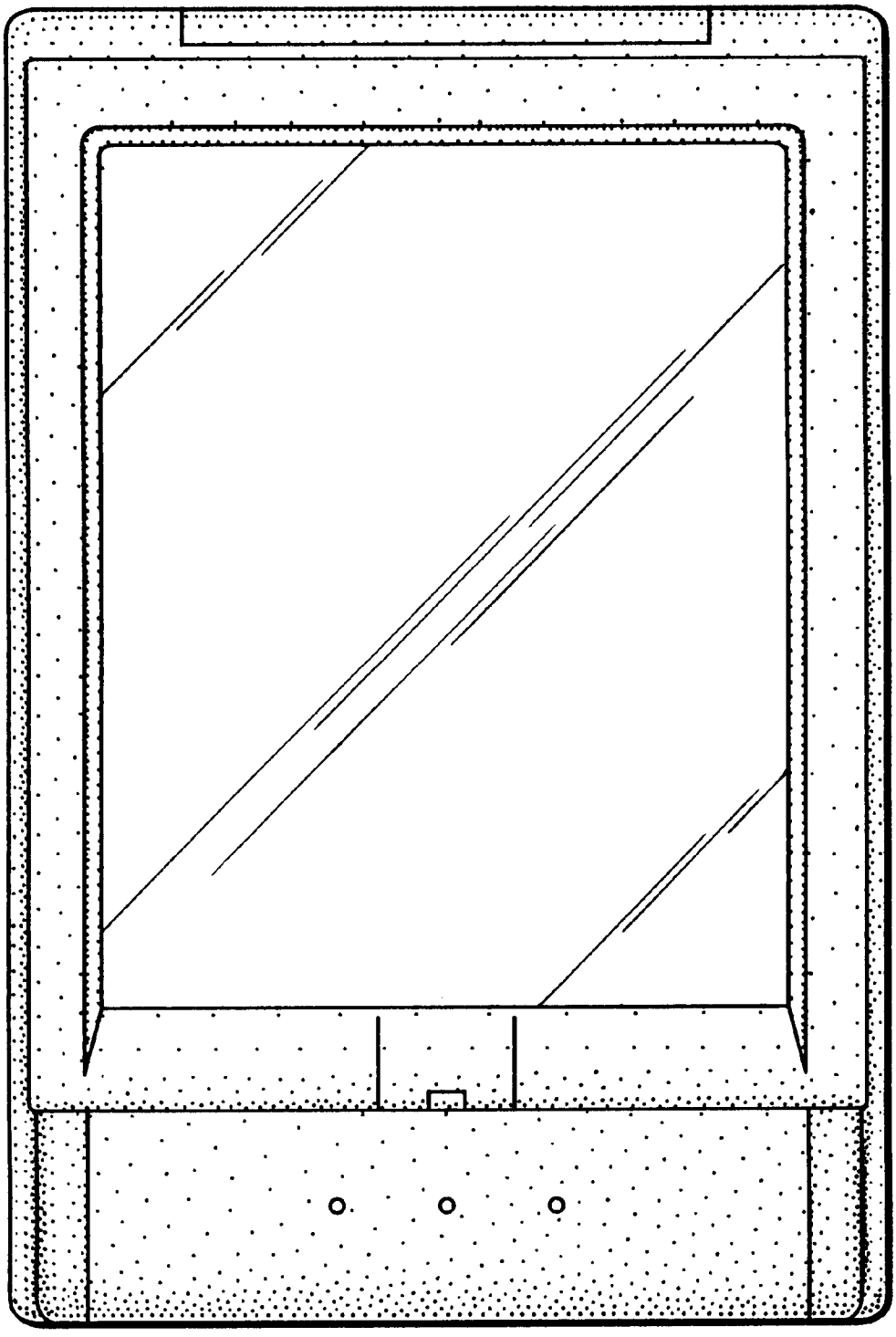

Fig. 11

Fig. 12



Fig. 13

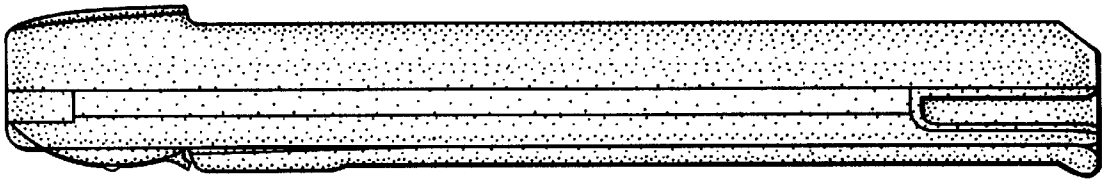

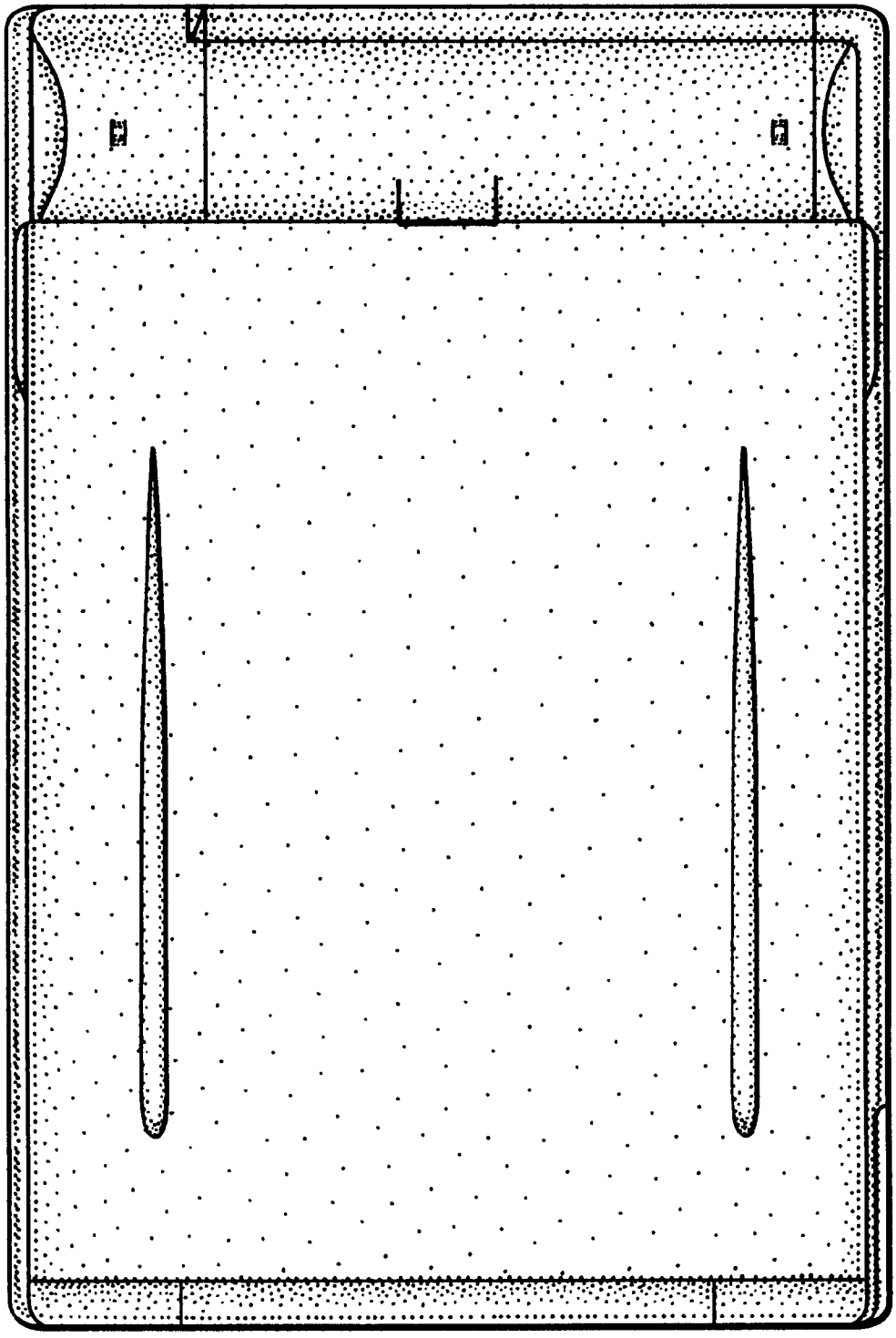

Fig. 14