J. W. HEDDEN.

STEP MOLD.

APPLICATION FILED MAY 15, 1912.

1,068,584.

Patented July 29, 1913.

2 SHEETS—SHEET 1.

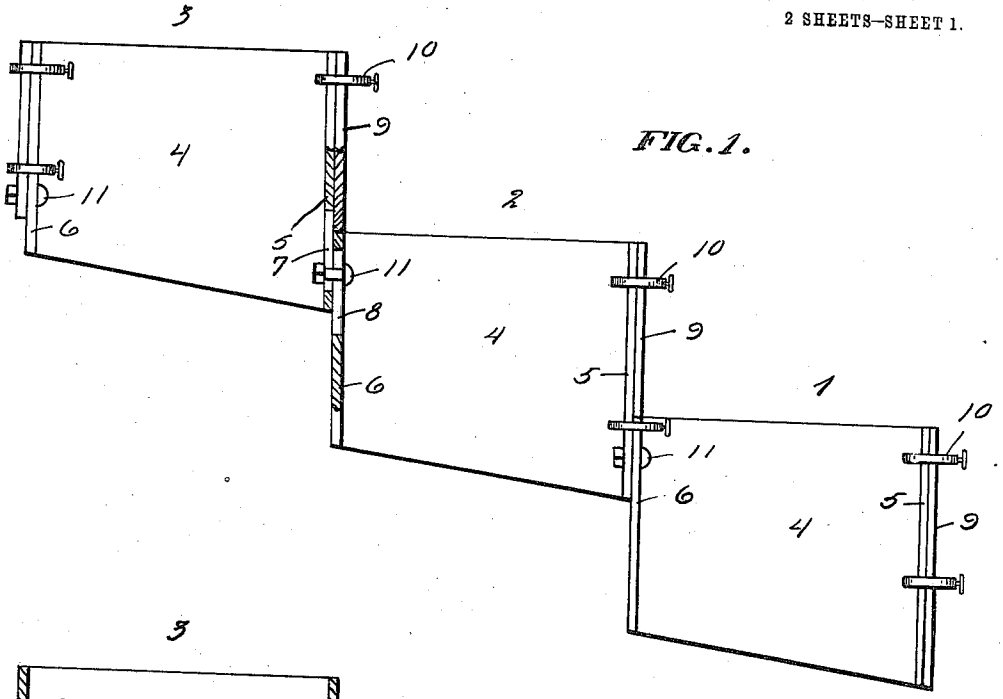

FIG. 1.

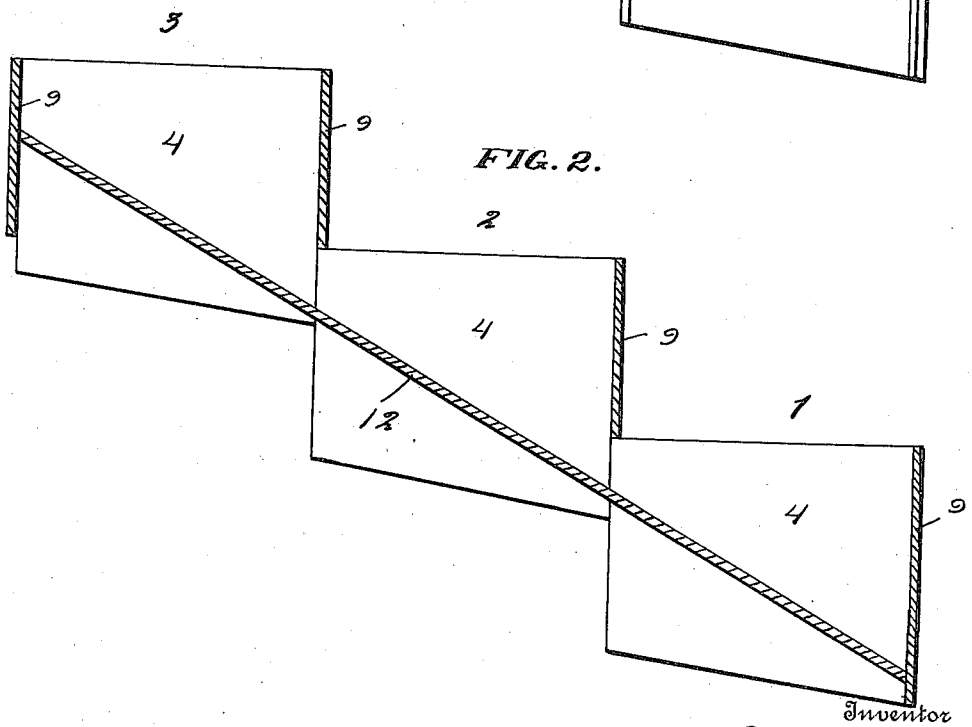

FIG. 2.

Witnesses

J. Milton Jester

B. F. Gilbourne

Inventor

J. W. Hedden.

By

C. L. Parker

Attorney

COLUMBIA PLANOGRAPH CO., WASHINGTON, D. C.

J. W. HEDDEN.

STEP MOLD.

APPLICATION FILED MAY 15, 1912.

1,068,584.

Patented July 29, 1913.

2 SHEETS—SHEET 2.

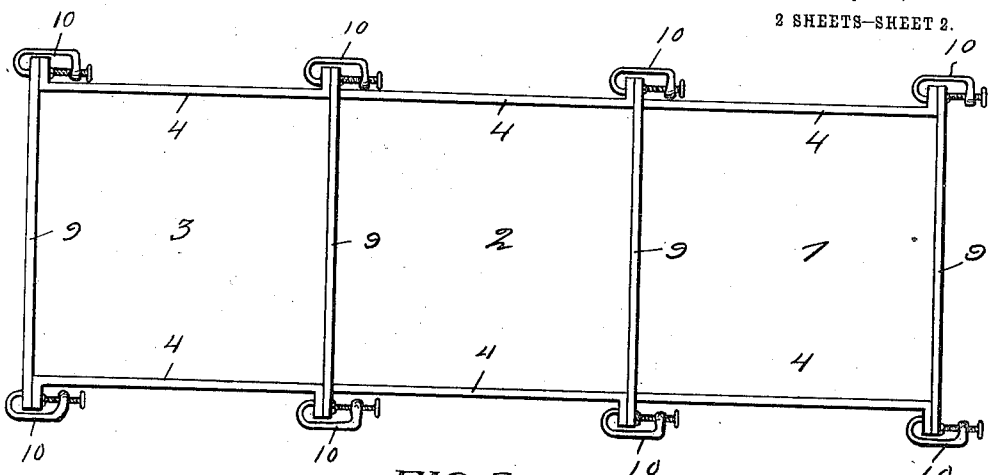

FIG. 3.

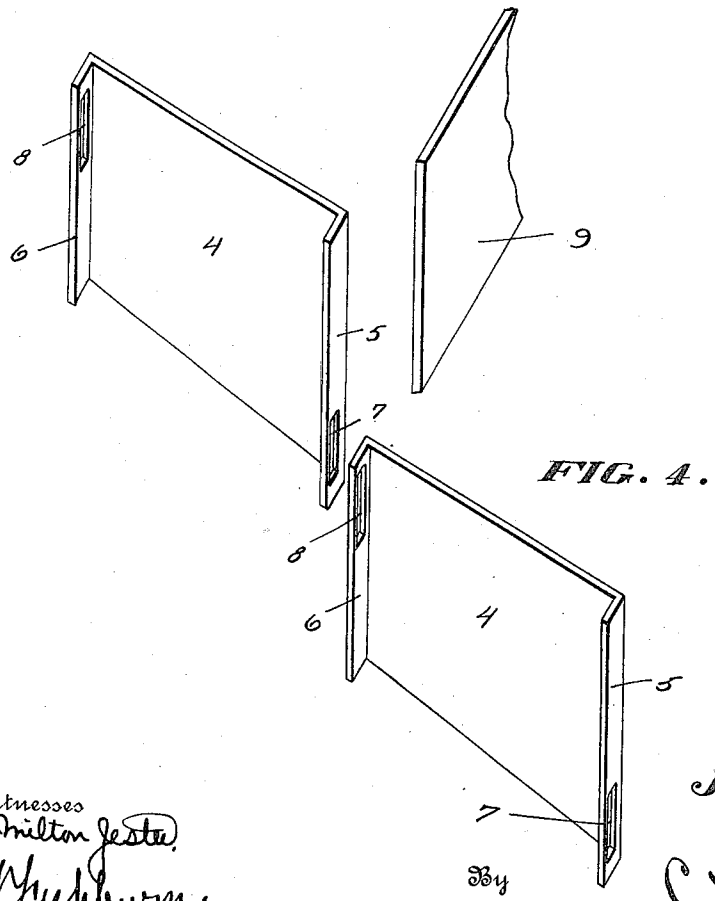

FIG. 4.

Witnesses
J. Milton Jester
B. Fuhlbourne

Inventor.
J. W. Hedden.

By C. L. Parker.
Attorney

COLUMBIA PLANOGRAPH CO., WASHINGTON, D. C.

UNITED STATES PATENT OFFICE.

JAMES W. HEDDEN, OF SEDALIA, MISSOURI.

STEP-MOLD.

1,068,584. Specification of Letters Patent. Patented July 29, 1913.

Application filed May 15, 1912. Serial No. 697,456.

To all whom it may concern:

Be it known that I, JAMES W. HEDDEN, a citizen of the United States, residing at Sedalia, in the county of Pettis and State of Missouri, have invented certain new and useful Improvements in Step-Molds, of which the following is a specification.

The present invention relates to a mold for making steps formed of concrete or other plastic material.

An important object of the invention is to provide a mold of the above mentioned character, the parts of which may be readily adjusted to form steps of different sizes.

A further object of the invention is to provide a device of the above mentioned character, comprising readily separable parts so that the device may be knocked down for the purpose of shipment.

A further object of the invention is to provide a step mold of the above mentioned character, which is simple in construction, cheap to manufacture, easy to operate, and durable.

Other objects and advantages of the invention will be apparent during the course of the following description.

In the accompanying drawings forming a part of this specification and in which like numerals are employed to designate like parts throughout the same, Figure 1 is a side view of the mold, Fig. 2 is a central vertical longitudinal sectional view through the same, Fig. 3 is a plan view of the same, and, Fig. 4 is a perspective view of parts of the mold shown slightly separated.

In the drawings, wherein for the purpose of illustration, I have shown a preferred embodiment of my invention, the numerals 1, 2 and 3 designate a plurality of mold sections, which are detachably and adjustably connected in a manner to be described. Each of these mold sections comprises transverse end pieces 4, provided at its ends with vertical outwardly extending flanges 5 and 6. Each flange 5 is provided near its lower end with an elongated slot or opening 7 and each flange 6 is provided near its upper end with an elongated slot or opening 8, as shown. Each mold section further comprises a longitudinal face piece or plate 9, which is disposed in engagement with the flanges 5 of the end pieces 4, above the openings 7, as shown. The longitudinal face piece or plate 9 is detachably and adjustably connected with the flanges 5 by means of clamps 10, of any well known or preferred type. By this construction, the transverse end pieces 4 may be moved toward or away from each other, depending upon the desired width of the step, and then rigidly connected with the longitudinal face pieces 9 by clamps 10. It is thus seen that each mold section is formed of the end pieces 4 and the longitudinal face piece or plate 9.

The adjacent mold sections are vertically adjustably connected so that the desired pitch or lift of the steps may be obtained. In describing this feature of the invention, I will refer to the mold sections 1 and 2.

The numeral 11 designates bolts which pass through the openings 8 and 7, and serve to normally rigidly connect or clamp the flanges 5 and 6 of the adjacent main sections together. It is obvious that by proper manipulation of these bolts, the mold section 2 may be vertically adjusted with relation to the mold section 4 and subsequently clamped to the same in adjustment at a desired position with relation thereto. The mold section 3 is adjustably connected with the mold section 2 in the same way.

I have shown only three mold sections, but it is to be understood that any suitable number of them may be connected together for forming steps of desired lengths.

In using my mold to form steps upon an inclined terrace of a lown, the desired number of mold sections are properly connected, depending upon the size of the steps, and placed upon such inclined terrace, the terrace serving in this instance to close the open lower portions of the mold sections. The concrete or other plastic material is fed into the mold sections through the upper open sides thereof until it is flush with the upper edges of the end pieces 4 and longitudinal face pieces 9. The mold is allowed to remain intact until the structure is properly hardened, subsequently to which it is removed by separating the various parts thereof. In constructing steps which lead to a porch or the like, and have a solid foundation, the properly assembled mold is placed in position and vertical strips or boards (not shown) are provided, to extend from the ground up to the end pieces 4 and the lowermost face piece 9, thus forming a closed mold for the foundation. The concrete or the like is now fed into the inner mold structure through the upper open sides of the mold sections. When the entire struc-

ture is properly hardened, the mold and boards may be removed, as is obvious. In constructing steps to lead to a porch or the like which have no foundation, the mold is properly positioned with relation to the porch and diagonal boards 12 are placed within the mold sections, as clearly shown in Fig. 2, for closing the lower sides of such mold sections. The concrete is fed into the mold sections through their upper open sides. Attention is called to the fact that the lowermost longitudinal face piece 9 extends downwardly to the lower end of the end pieces 4.

It is to be understood that the form of my invention herewith shown and described, is to be taken as a preferred example of the same, and that certain changes in the shape, size, and arrangement of parts may be resorted to without departing from the spirit of the invention or the scope of the subjoined claims.

Having thus described my invention, I claim:—

1. A mold for forming steps, comprising a plurality of end pieces, each end piece being provided near its ends with outwardly extending substantially vertical flanges provided with longitudinally disposed elongated openings near the upper and lower ends of the vertical flanges, bolts disposed within the openings to serve as adjustable means to connect the end pieces so that they may be moved vertically with relation to each other, longitudinal face pieces placed in engagement with the forward vertical flanges, and detachable clamps engaging the end pieces and said forward vertical flanges.

2. A mold for forming steps, comprising suitably spaced sets of upstanding end pieces, each of which is vertically movable with relation to the other, means to lock one end piece to the adjacent end piece in adjustment at desired vertical positions with relation thereto, and longitudinal face pieces connected with the end pieces.

In testimony whereof I affix my signature in presence of two witnesses.

JAMES W. HEDDEN.

Witnesses:
W. W. BARRETT,
STANLEY SHORTRIDGE.

Copies of this patent may be obtained for five cents each, by addressing the "Commissioner of Patents, Washington, D. C."