June 3, 1930. D. W. WELLS 1,761,321

FOUNDATION CONSTRUCTION

Filed June 1, 1927

Fig. 2

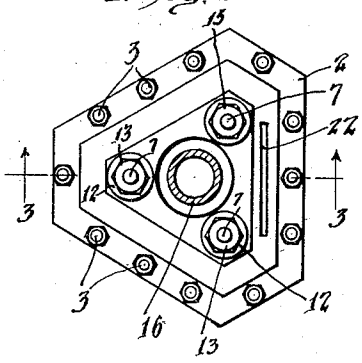

Fig. 4

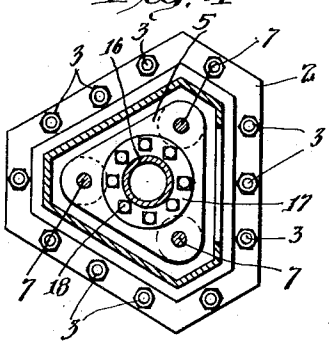

Fig. 3

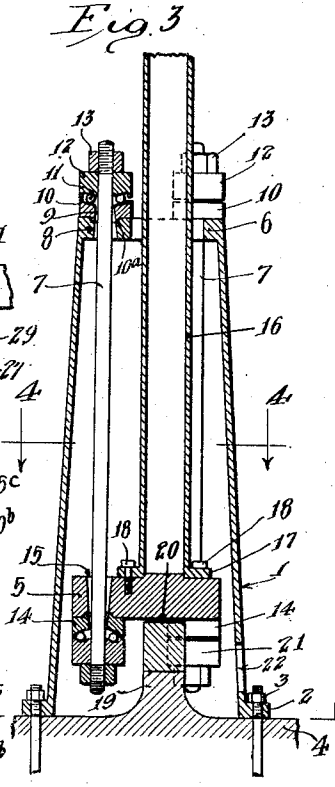

Fig. 5

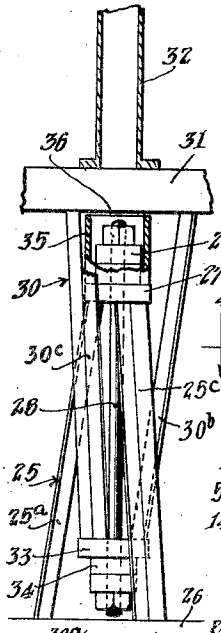

Fig. 1

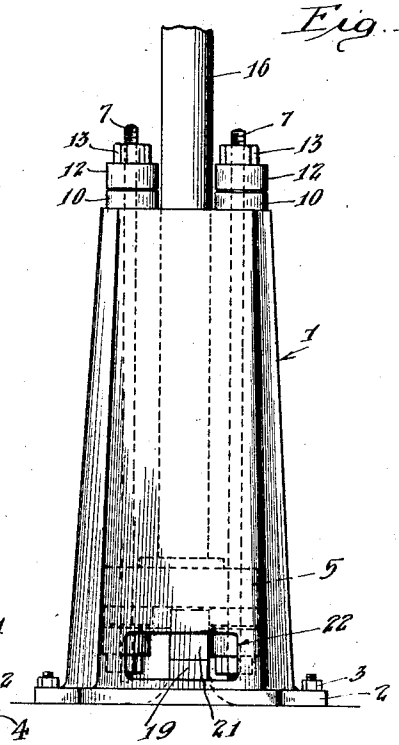

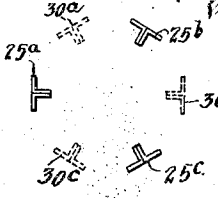

Fig. 6

Inventor

Don W. Wells

By Lyon & Lyon

Attorneys

Patented June 3, 1930 1,761,321

UNITED STATES PATENT OFFICE

DON W. WELLS, OF EL CENTRO, CALIFORNIA, ASSIGNOR OF ONE-FOURTH TO GEORGE W. ANDERSON, OF LOS ANGELES, CALIFORNIA, ONE-FOURTH TO RAY EDGAR, AND ONE-FOURTH TO JOHN STEWART ROSS, BOTH OF EL CENTRO, CALIFORNIA

FOUNDATION CONSTRUCTION

Application filed June 1, 1927 Serial No. 195,670.

This invention relates to a foundation construction for buildings. While the invention may be employed in the construction of foundations for buildings in any locality, the invention is especially applicable in regions subject to earthquakes. The general object of the invention is to provide a construction which will eliminate the destructive effect of earthquake shocks on buildings.

The invention contemplates a construction which provides a suspension support for the lower end of the building columns, and one of the objects of the invention is to provide a simple construction which will provide a flexible support that will have ample strength to support the weight on the column but which will absorb any lateral movements of the earth during an earthquake, that is to say, prevent their being imparted to the building.

Further objects of the invention will appear hereinafter.

The invention consists of the novel parts and combination of parts to be described hereinafter, all of which contribute to produce an efficient foundation construction.

A preferred embodiment of the invention is described in the following specification, while the broad scope of the invention is pointed out in the appended claims.

In the drawings:

Figure 1 is a side elevation of a foundation construction embodying my invention, the upper portion of the column being broken away.

Figure 2 is a plan of the parts shown in Figure 1, the column being shown in cross section.

Figure 3 is a vertical section through the foundation construction, taken about on the line 3—3 of Figure 2.

Figure 4 is a horizontal cross-section taken about on the line 4—4 of Figure 3.

Figure 5 is a side elevation and partial section illustrating another embodiment of the invention in which a single suspension rod is employed.

Figure 6 is a diagrammatic view indicating the relation of the legs of two tripods which are included in the construction shown in Figure 5.

In practicing the invention, I provide a base 1 which is preferably in the form of a pedestal that tapers slightly in an upward direction, being provided with a flange 2 at its lower end to receive foundation bolts 3 that may be set in a foundation 4 of cement or similar material.

A crosshead 5 is provided, together with means for supporting this crosshead from the head 6 of the pedestal in such a way that lateral shocks in an earthquake will not be imparted to the building supported on such crossheads. In order to accomplish this, I prefer to support the crosshead on a plurality of suspension members or swing members 7 that may be in the form of flexible steel rods, the upper ends of which are connected to the head 6 of the pedestal and the lower ends connected to the crossheads.

The connections at the ends of the rods 7 are preferably flexible connections, although this is not essential. For this purpose at the upper end of the pedestal each rod 7 passes through an enlarged opening 8 in the pedestal head and also through a similar enlarged opening 9 in a collar 10 which rests on the upper face of the head 6; the upper face of this column is slightly dished so that it forms a seat for a plurality of balls 11, said balls being received in a retaining collar 12 upon which a nut 13 rests. This nut seats against the upper face of the collar 12. In this way, I virtually provide a ball-bearing joint that permits free swinging movement of the lower end of the rod 7 at this point.

A similar joint 14 may be provided at the lower end of each rod 7, at which point, the rod passes through an enlarged opening 15 in the crosshead. Collars similar to the collars 10 and 12 are provided below the crosshead, and in other respects the construction at this point is similar to the joint or connection which is formed at the upper end of the rod. In this way I provide a flexible support or swing for the supporting structure capable of lateral movement when an earth shock occurs.

On the crosshead 5 an ordinary column 16 is supported. For this purpose the column

may be provided with a flange 17, with bolts 18 to secure it to the crosshead.

The pedestal may be of any desired form in plan. However, I prefer to make the pedestal substantially triangular in plan, and construct it so that three of the suspending bars 7 may be employed. I prefer to use only three suspending chains, cables, rods, or bars, because this gives the support the greatest amount of flexibility, with safety, and also gives the construction substantially an equal amount of flexibility for any given direction in which the lateral shock may come.

On the columns such as column 16, the beams and roof of the building can be supported in the regular way.

In order to make the construction perfectly safe in case the long bolts or rods 7 should give way, I prefer to provide the foundation 4 with a foot 19 that extends up to a point near the under side of the crosshead 5. At this point a narrow gap 20 is formed. In practice this gap should not be greater than one-thirty-second of an inch.

With this construction it will be evident that if the rods 7 should fail under the tensile forces at any time, the crosshead would simply settle down through a thirty-second of an inch until its under side rested on the upper face of the foot 19. In practice the foot 19 may be surmounted by a block 21 of metal or similar material which can be finished to the proper dimension to allow the desired amount of clearance in the gap 20. However, this clearance can be adjusted as desired by adjusting the nuts 13 on the threads of the rods.

I prefer to provide the side of the pedestal with a handhole 22 through which a gauge may be inserted, when desired, to measure the width of the gap 20. This may be done as a precaution from time to time.

Where the loads are light, I may support the columns on a single suspension bar. Such a construction is illustrated in Figures 5 and 6. In this construction I provide a suitable mounting for a single bar between the supported column and the foundation. An example of such a construction is illustrated in Figure 5 in which I provide a base tripod 25, the legs 25^a, 25^b and 25^c resting upon the foundation 26. This tripod supports a substantially circular head 27 through which a suspension rod 28 passes. The upper end of this suspension rod passes through collars 29 such as the collars 10 and 12 already described in connection with Figures 1 and 3, the construction being such that the suspension rod is supported on the head 27 in such a way that it is free to swing laterally at its lower end.

I also provide an upper tripod 30 having three legs 30^a, 30^b and 30^c, the upper ends of which are secured to a beam or floating foot 31 upon which columns such as the column 32 may be mounted.

The lower end of the tripod 30 carries a head 33 through which the lower end of the extension rod 28 extends. Below the head 33 collars 34 are provided similar to the collars illustrated in Figures 1 and 3.

It will be noted that the legs of the upper tripod are disposed between the legs of the lower tripod so as to permit free movement of the tripods relative to each other in case an earthquake shock occurs.

In this embodiment of the invention the upper head 27 of the lower tripod is provided with a block 35 in the form of a cylinder. The upper end of this cylinder is disposed a slight distance below the beam or floating foot 31 so that a gap 36 is formed at this point which may be about $\frac{1}{32}$ of an inch wide. If the suspension rod 28 fails, the floating foot or beam 31 would simply settle down onto the block 35.

In the embodiment of the invention shown in Figures 1 and 3 handholes similar to the handhole 22 may be provided if desired to give access to the nuts and collars at the lower ends of the suspension rods.

It is understood that the embodiment of the invention described herein is only one of the many embodiments this invention may take, and I do not wish to be limited in the practice of the invention, nor in the claims, to the particular embodiment set forth.

What I claim is:

1. In a foundation construction for buildings and the like, the combination of a base in the form of a pedestal constructed to be supported on the ground, a crosshead within the pedestal, a plurality of tension bars supported on the upper end of the pedestal extending down through the same and supporting the said crosshead, and a column supported on the crosshead.

2. In a foundation construction for buildings and the like, the combination of a base in the form of a pedestal constructed to be supported on the ground, a crosshead within the pedestal, a plurality of tension rods supported on the upper end of the pedestal, extending down through the same and supporting the said crosshead, a column supported on the crosshead, and flexible joints at the points of connection of the rods with the pedestal and the crosshead.

3. In a foundation construction for buildings and the like, the combination of a base supported on the ground, a cross-head, suspending means for supporting the cross-head from the base, and a column supported on the cross-head.

4. In a foundation construction for buildings and the like, the combination of a base constructed to be supported on the ground, a cross-head, suspending means consisting of a plurality of substantially vertical elongated

tension members for supporting the cross-head on the base, and a column supported on the cross-head.

5. In a foundation construction for buildings and the like, the combination of a base constructed to be supported on the ground, a cross-head, a plurality of elongated tension members for supporting the cross-head on the base, a column supported on the cross-head, and a foot supported on the ground with its upper face disposed close to the under side of the cross-head.

Signed at El Centro, California, this 21st day of May, 1927.

DON W. WELLS.