C. B. CORCORAN.

TYPE WRITING MACHINE.

APPLICATION FILED AUG. 9, 1912.

1,100,669. Patented June 16, 1914.

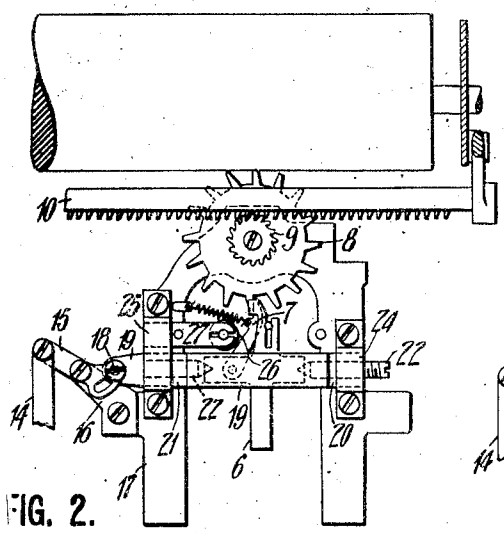

FIG. 2.

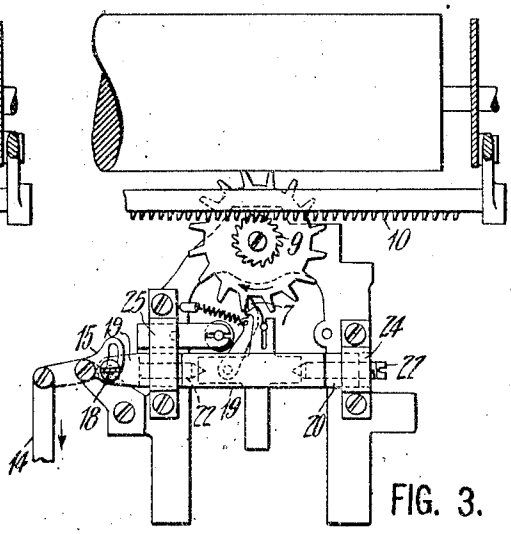

FIG. 3.

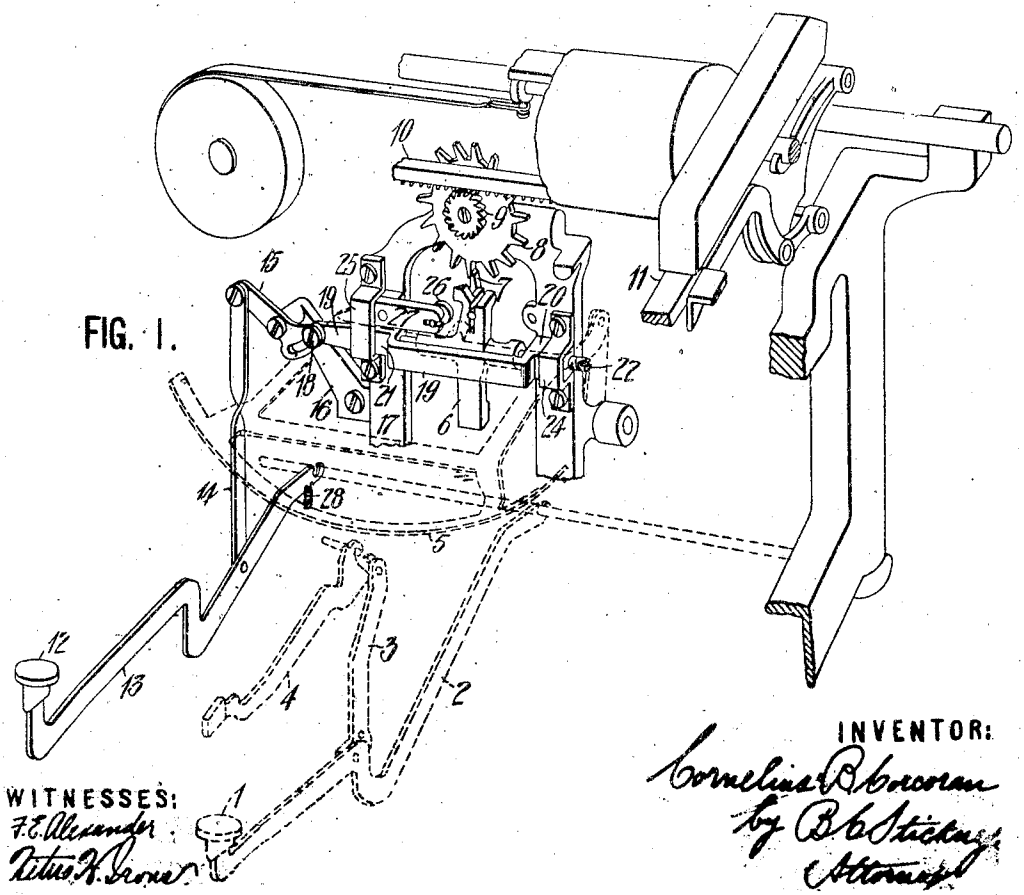

FIG. 1.

WITNESSES:

F. E. Alexander

Titus H. Brown

INVENTOR:

Cornelius B. Corcoran

by B. B. Stickney

Attorney

UNITED STATES PATENT OFFICE.

CORNELIUS B. CORCORAN, OF NEW YORK, N. Y., ASSIGNOR TO UNDERWOOD TYPEWRITER COMPANY, OF NEW YORK, N. Y., A CORPORATION OF DELAWARE.

TYPE-WRITING MACHINE.

1,100,669. Specification of Letters Patent. Patented June 16, 1914.

Application filed August 9, 1912. Serial No. 714,172.

To all whom it may concern:

Be it known that I, CORNELIUS B. CORCORAN, a citizen of the United States, residing in the borough of Bronx, city of New York, in the county of New York and State of New York, have invented certain new and useful Improvements in Type-Writing Machines, of which the following is a specification.

This invention relates to the letter feed mechanism of typewriting machines.

The principal object of the present invention is to provide improved means for shifting the paper carriage a fraction of a letter space, and maintaining the carriage in this relative position so as to enable the typist to close space the letters when required.

In carrying out this invention I mount the rocker of the escapement mechanism upon a shiftable carrier or support and an extra key is provided on the keyboard for moving this carrier. When this key is depressed the carrier is shifted, carrying with it the rocker which, through the feed dog, gives the escapement wheel a partial turn, transmitting its motion through the pinion and feed rack to the carriage, which is thus moved a fraction of a letter space to the right against the tension of the impelling spring. As long as this key is kept depressed, the rocker is maintained in this shifted position, thus making it possible to shift an entire word a fraction of a letter space to the left, and giving room for an additional letter. I preferably arrange the parts so that when the key is fully depressed the rocker is moved sufficiently to shift the carriage one half of a letter space, thus giving an even spacing on both sides of the inserted word.

Further objects and advantages will hereinafter appear.

In the accompanying drawings, Figure 1 is a perspective view illustrating my invention applied to an Underwood writing machine, parts of the machine being broken away or omitted for the sake of clearness. Fig. 2 is an elevation illustrating the carrier and rocker in normal position. Fig. 3 is an elevation illustrating the carrier and rocker in shifted position.

Keys 1 through key bars 2 are connected by links 3 with the type bars 4 which engage the universal bar 5, the latter transmitting its motion through an arm (not shown) to the rocker 6. The latter carries the feed dog 7 engaging the escapement wheel 8 connected to pinion 9 meshing with the feed rack 10 of the carriage 11. All of these parts are found in the usual form of Underwood writing machine.

To shift the carriage a fraction of a letter space to the right, I mount upon the keyboard an additional key 12 upon a key bar 13 which may be pivoted to the common fulcrum bar of the rest of the keys. A link 14 connects this key bar to a lever 15 fulcrumed upon a bracket 16 fixed to the frame 17 which carries the escapement mechanism. This lever 15 has a cam slot into which projects a pin 18 mounted upon a slide or carrier 19 to which the rocker 6 is pivoted, so that the movement of the lever 15 will positively operate the carrier 19 and positively hold said carrier against movement in either direction from any position to which it is brought by the cam lever. When the key 12 is depressed, the rocker is shifted through the above connection from its normal position shown in Fig. 2 to the position shown in Fig. 3, thus giving the escapement wheel a partial turn, which, through the pinion and feed rack, shifts the carriage a fraction of a letter space to the right against the action of the impelling spring. So long as the key 12 is kept in depressed or partially depressed position, the carriage will be maintained in a correspondingly shifted position, during which time a word may be written which will be shifted a fraction of a letter space to the left. I preferably so proportion the parts that when the key is fully depressed the carriage will be shifted one half of a letter space to the right, so that when a word is inserted, containing one more letter, to take the place of a word which has been erased, an equal space will be left on each side of the inserted word.

The carrier 19 preferably comprises two end blocks 20 and 21 carrying the pivots 22 upon which the rocker is mounted, one of said pivots being threaded for adjustment of the rocker relatively to the carrier. The blocks are connected by a yoke which is offset to one side of the blocks to allow the pivotal movement of the rocker. These blocks slide in guides 24 and 25 which are fastened to the frame carrying the escapement mechanism. The speed adjusting screw 26 is preferably mounted upon a bar 27 extend-

ing from block 21 so as to be movable together therewith, and thus maintain its proper relative position with reference to the feed dog. A return spring 28 is preferably provided for the key bar 13 to return the same to normal position when the key is released by the operator.

Many variations may be made without departing from the spirit and scope of this invention, and parts of the improvements may be used without others.

Having thus described my invention, I claim:

1. In a typewriting machine, the combination of carriage feed mechanism comprising an escapement wheel, a rocker, a dog carried by said rocker adapted to engage said wheel, a movable carrier on which said rocker is mounted, and means for actuating said carrier and dog as a unit to rotate the escapement wheel.

2. In a typewriting machine, the combination of carriage feed mechanism comprising an escapement wheel, a rocker, a dog carried by said rocker adapted to engage said wheel, a slide on which said rocker is mounted, and means for actuating the slide and thereby rotating the escapement wheel.

3. In a typewriting machine, the combination of carriage feed mechanism comprising an escapement wheel, a rocker, a dog carried by said rocker adapted to engage said wheel, a movable carrier on which said rocker is mounted, and a cam for actuating said carrier.

4. In a typewriting machine, the combination of carriage feed mechanism comprising an escapement wheel, a rocker, a dog carried by said rocker adapted to engage said wheel, a movable carrier on which said rocker is mounted, and a lever having a cam face for actuating said carrier.

5. In a typewriting machine, the combination of carriage feed mechanism comprising an escapement wheel, a rocker, a dog carried by said rocker adapted to engage said wheel, a frame, guides mounted on said frame, a slide working in said guides, said slide carrying said rocker, and means for actuating said slide.

6. In a typewriting machine, the combination of carriage feed mechanism comprising an escapement wheel, a rocker, a dog carried by said rocker adapted to engage said wheel, a frame, guides mounted on said frame, a slide carrying said rocker working in said guides, and a cam lever connected to positively actuate said slide in both directions.

7. In a typewriting machine, the combination of carriage feed mechanism comprising an escapement wheel, a rocker, a dog carried by said rocker adapted to engage said wheel, a frame, guides mounted on said frame, a slide working in said guides, said rocker being pivotally mounted in said slide, the pivotal axis extending in the direction of throw of the slide, and means for actuating the slide.

8. In a typewriting machine, the combination of carriage feed mechanism comprising an escapement wheel, a rocker, a dog carried by said rocker adapted to engage said wheel, a frame, yokes mounted on said frame, a slide working in said yokes, said rocker being pivotally mounted on said slide, the pivotal axis extending in the direction of travel of the slide, a bracket attached to the frame, and a cam lever mounted on said bracket and adapted to actuate the slide.

9. In a typewriting machine, the combination of carriage feed mechanism comprising an escapement wheel, a rocker, a dog carried by said rocker adapted to engage said wheel, a frame, guides mounted thereon, a slide working in said guides, said slide comprising two end blocks engaging the guides, to which end blocks the rocker is pivoted, a yoke spanning the rocker and connecting the end blocks, and means for actuating the slide.

10. In a typewriting machine, the combination of carriage feed mechanism comprising an escapement wheel, a rocker, a dog carried by said rocker adapted to engage said wheel, a frame, guides on the frame, a slide working in said guides, said rocker being pivotally mounted on said slide, and means to actuate said slide and thereby rotate the escapement wheel.

11. In a typewriting machine, the combination of carriage feed mechanism comprising an escapement wheel, a rocker, a dog carried by said rocker adapted to engage said wheel, a frame, guides on the frame, a slide working in said guides, said rocker being pivotally mounted on said slide, and a device connected to the slide to positively operate it in both directions.

12. In a typewriting machine, the combination of an escapement wheel, an escapement dog, a rocker on which said dog is mounted, a carrier for said rocker, means to adjust the rocker relatively to the carrier, and a device to shift the carrier and to positively hold it against movement in either direction from any intermediate position to which it may be shifted.

13. In a typewriting machine, the combination with a rack bar, an escapement wheel to operate said bar, a rocker and an escapement dog carried thereby, of a shiftable carrier in which said rocker is journaled, a lever having a connection with said carrier for positively operating it in opposite directions, and a key connected to operate said lever.

14. In a typewriting machine, the combination of carriage feed mechanism comprising a rack, a coöperating dog, a rocker on which said dog is mounted, a frame, guides

on said frame, a slide working in said guides and on which said rocker is pivotally mounted, the pivotal axis of said rocker extending in the direction of movement of the slide, a lever mounted on the frame and operatively connected to said slide, and a key to actuate said lever.

15. In a typewriting machine, the combination of carriage feed mechanism comprising a rack, a rocker, a dog carried by said rocker and coöperating with said rack, a frame, a slide mounted in the frame, said rocker being pivotally mounted in said slide, and a key to operate said slide.

16. In a typewriting machine, the combination of carriage feed mechanism comprising an escapement wheel, a rocker, a dog carried by said rocker adapted to engage said wheel, a movable carrier for the rocker, an adjusting pivot mounted on said movable carrier to adjust the rocker relatively to the carrier, and means to shift the rocker and carrier as a unit and thereby rotate the escapement wheel.

CORNELIUS B. CORCORAN.

Witnesses:
C. RIPLEY,
E. LIBBY.