May 23, 1950 S. E. SCHROEDER 2,508,803

CONTROL MECHANISM FOR OUTBOARD MOTORS

Filed Sept. 20, 1947 3 Sheets-Sheet 1

Fig. 1

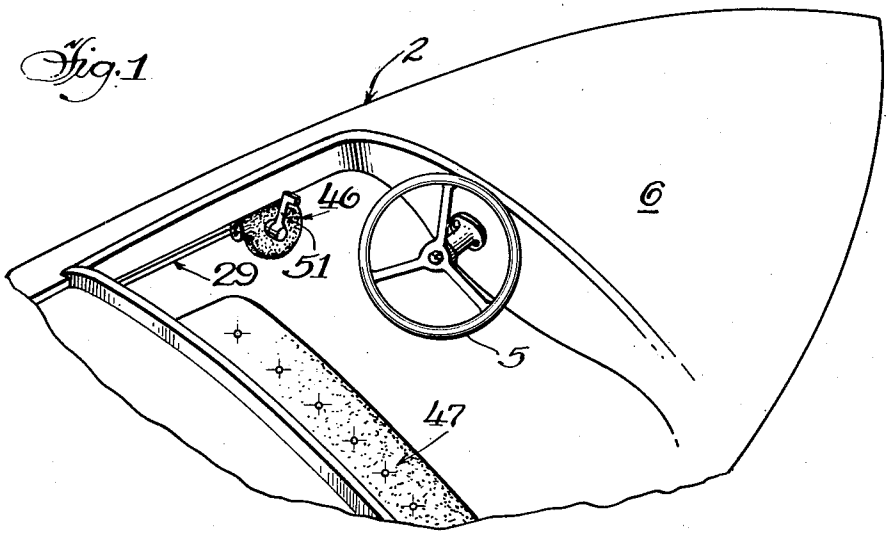

Fig. 2

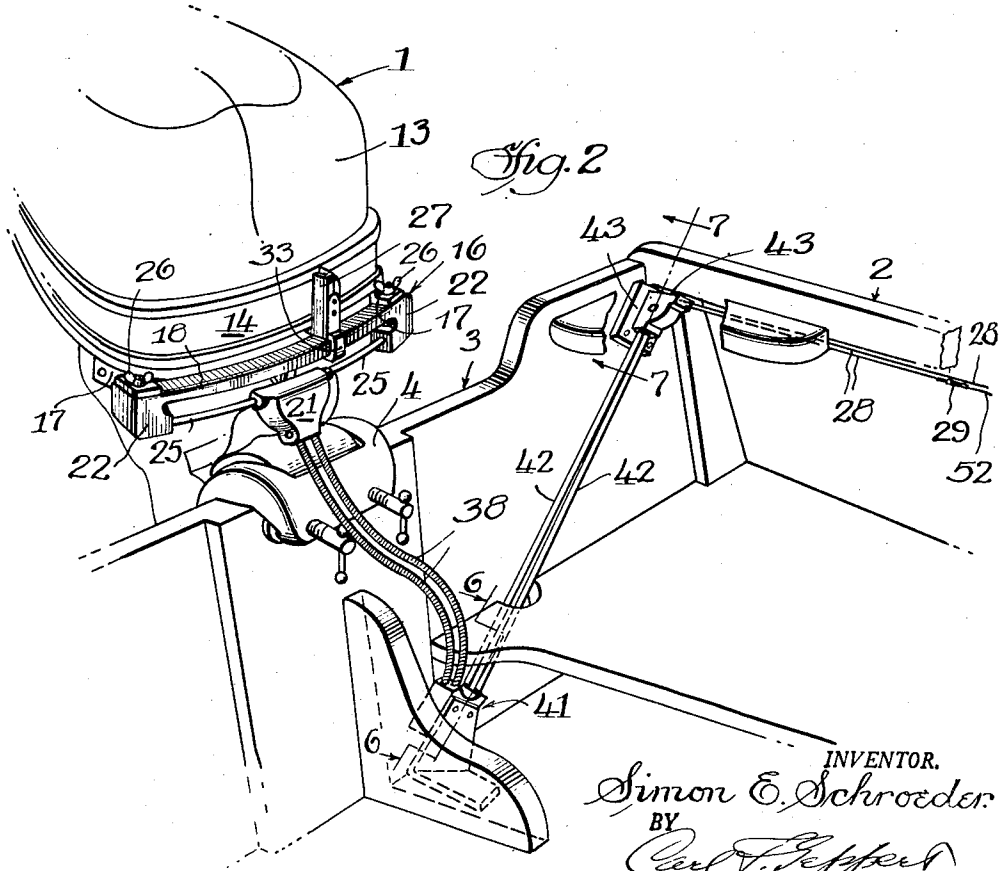

INVENTOR.
Simon E. Schroeder
BY
Carl V. Pfeffer
Atty.

May 23, 1950 S. E. SCHROEDER 2,508,803

CONTROL MECHANISM FOR OUTBOARD MOTORS

Filed Sept. 20, 1947 3 Sheets-Sheet 2

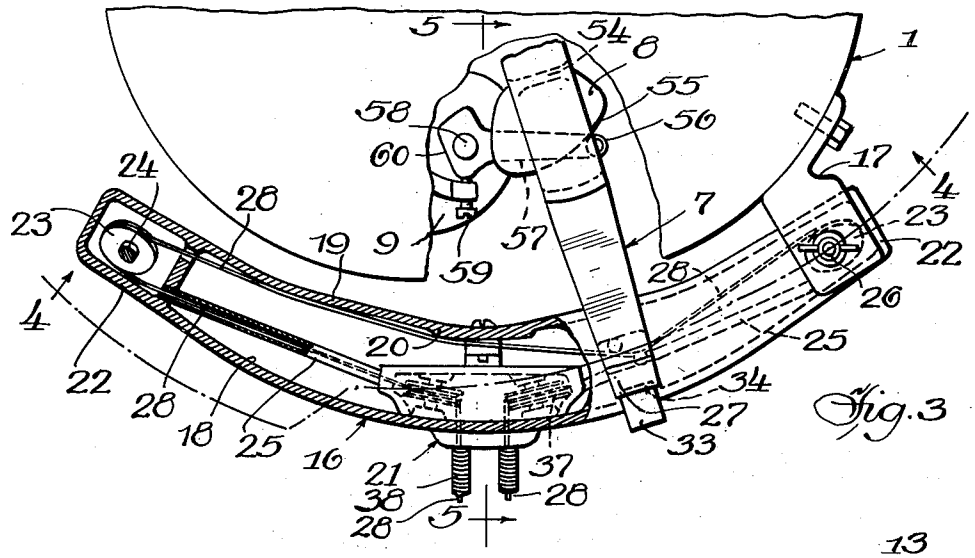

Fig. 3

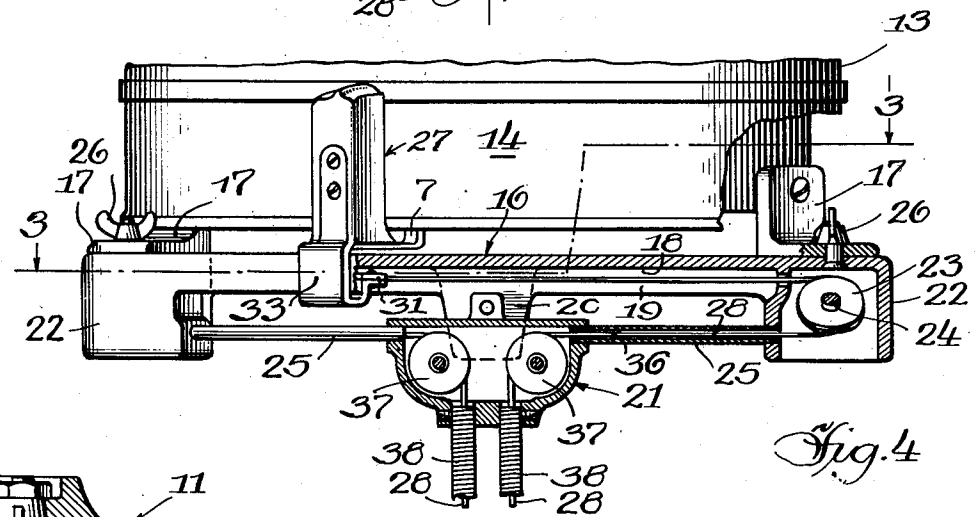

Fig. 4

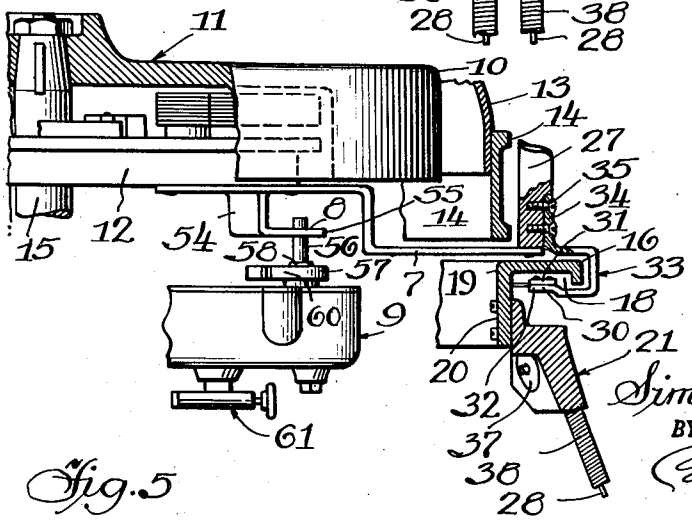

Fig. 5

INVENTOR.
Simon E. Schroeder
BY
Carl F. Keffer
Atty.

May 23, 1950 S. E. SCHROEDER 2,508,803

CONTROL MECHANISM FOR OUTBOARD MOTORS

Filed Sept. 20, 1947 3 Sheets-Sheet 3

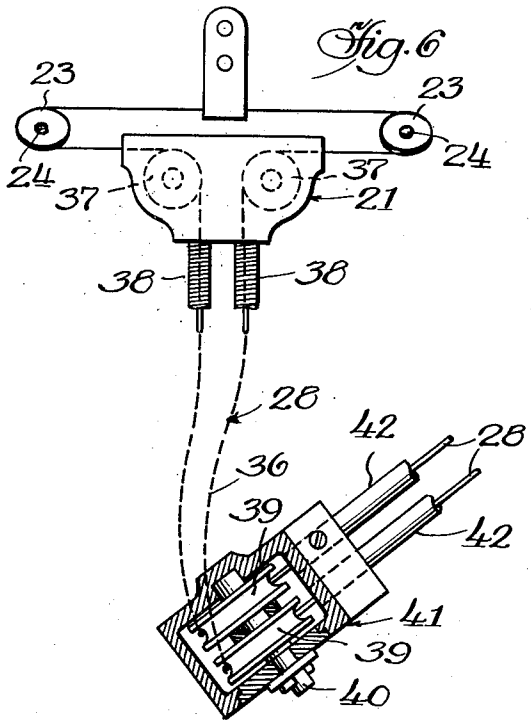

Fig. 6

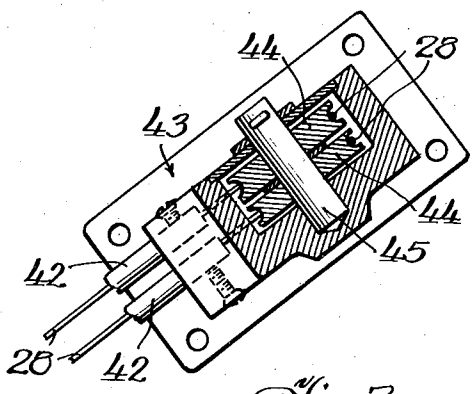

Fig. 7

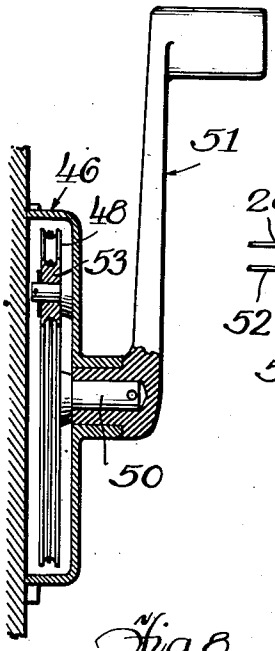

Fig. 8

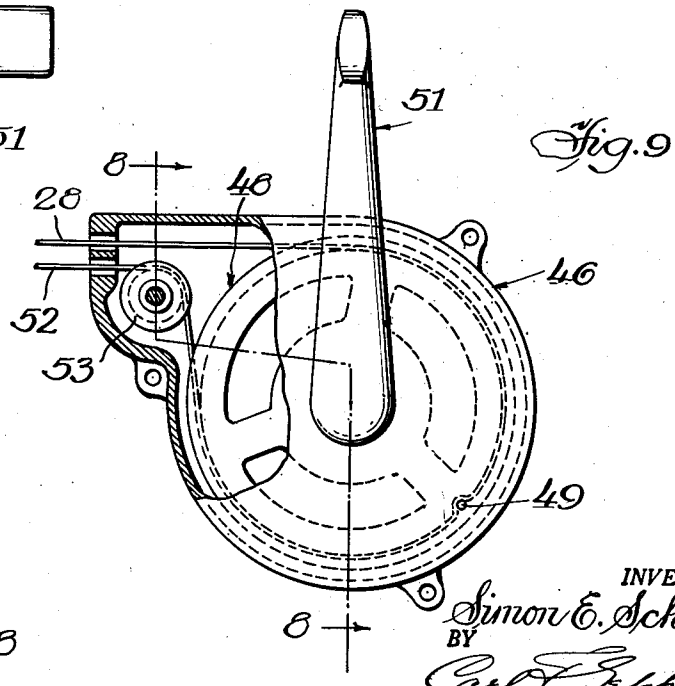

Fig. 9

INVENTOR.
Simon E. Schroeder,
BY
Carl F. Zeppert
Atty.

Patented May 23, 1950

2,508,803

UNITED STATES PATENT OFFICE

2,508,803

CONTROL MECHANISM FOR OUTBOARD MOTORS

Simon E. Schroeder, Oshkosh, Wis.

Application September 20, 1947, Serial No. 775,304

8 Claims. (Cl. 115—0.5)

1

The present invention relates to control mechanism and more particularly to a novel means for and manner of operating a marine engine of the outboard type by remote control from the front of the boat.

Among the objects of the present invention is the provision of a novel remote control mechanism for an outboard motor whereby the operation of the motor mounted at the rear of the boat may be effectively and fully controlled by an operator seated in the front of the boat in a manner similar to the operation of boats of the inboard type where the motor or power plant is located within the boat.

The invention further comprehends control means and mechanism in the form of a novel attachment for operating outboard motors by remote control, and accurately and effectively controlling their operation between stop and maximum speed.

Another important object of the present invention is the provision of a novel control system including a small diameter endless cable connected to a manual control handle at the front of the boat and to the standard single control lever on the outboard motor. Although the device is shown as mounted on one form of standard outboard motor, it has been so designed and constructed that it may be applied to various types and constructions, regardless of the arc of movement of the control lever.

A further important object of the present invention is the provision of a novel remote control mechanism which is so designed, constructed and arranged that it may be quickly attached to or detached from the motor, and when detached therefrom the motor may be removed and mounted upon another boat without delay and without altering the normal operation.

The present invention also comprehends the use of a system of pulleys and cable so constructed and arranged as to permit their ready application to a boat and motor of the outboard type, and to be quickly disconnected from the motor if the operator desires to control the motor in the conventional manner from the rear of the boat.

Further objects are to provide a construction of maximum simplicity, efficiency, economy and ease of assembly and operation, and such further objects, advantages and capabilities as will later more fully appear and are inherently possessed thereby.

The invention further resides in the construction, combination and arrangement of parts illus-

2

trated in the accompanying drawings, and while there is shown therein a preferred embodiment it is to be understood that the same is susceptible of modification and change and comprehends other details, arrangements of parts, features and constructions without departing from the spirit of the invention.

In the drawings:

Figure 1 is a fragmentary view in perspective of the forward end or bow of a boat equipped with the present novel control.

Fig. 2 is a fragmentary view in perspective of the rear end or stern of the boat of Fig. 1 and showing the novel means and manner of mounting the present invention in the boat and to an outboard motor for controlling the power and speed of the motor.

Fig. 3 is a view, part in horizontal cross-section and part in plan, taken substantially on the irregular line 3—3 of Fig. 4, and with parts broken away to more clearly disclose the operating mechanism for an outboard motor.

Fig. 4 is a view taken on the irregular line 4—4 of Fig. 3, and showing part in side elevation and part in vertical cross-section the control or operating mechanism.

Fig. 5 is a fragmentary view, part in side elevation and part in vertical cross-section, taken in a plane represented by the line 5—5 of Fig. 3.

Fig. 6 is a view, part in front elevation and part in horizontal cross-section, the latter part being taken along the line 6—6 of Fig. 2 and showing the arrangement of certain of the pulleys and cables for controlling the operation of the motor.

Fig. 7 is a vertical cross-sectional view taken in a plane represented by the line 7—7 of Fig. 2.

Fig. 8 is a view in vertical cross-section of the manual control handle, housing and associated mechanism for controlling the operation of the motor, the view being taken on the irregular line 8—8 of Fig. 9.

Fig. 9 is a view in front elevation of the mechanism of Fig. 8, but with parts broken away for a more clear illustration of the pulley wheels and control wires.

Referring more particularly to the novel but illustrative embodiment shown in the drawings, the present invention contemplates a novel attachment for operating an outboard motor 1, located at the rear of a boat 2 by remote control from the front of the boat. The outboard motor 1 is of any desired type and construction mounted at the rear on the transom 3 of the boat by a clamping bracket 4. To steer or guide the boat,

a steering wheel 5 is provided at the front or adjacent the bow 6 of the boat and is connected to the motor and its pivotal mounting in any desired manner to move or rotate the motor through its usual arc of movement and in any desired position for controlling the path or direction of travel of the boat. As the method or manner of guiding the boat forms no part of the present invention, details of the steering mechanism have been omitted. However, any suitable steering means may be provided.

To control the operation of the motor 1 by remote control as herein contemplated, means are provided for automatically adjusting and controlling the spark and gas mixture from the stop position to maximum speed. In the motor as herein shown, a single lever 7 adjusts the spark and synchronously through the use of a cam 8 simultaneously adjusts the passage of gas from the carburetor 9 to the motor 1.

As in many outboard motors, the engine is provided with a magneto fly-wheel. The ignition system or magneto and fly-wheel are constructed as a unit, the fly-wheel 10 being mounted upon or forming part of a cup-shaped housing 11 which forms with the armature plate 12 a complete enclosure for the ignition system. The armature plate does not rotate with the fly-wheel 10 and housing 12, but is secured to the lever 7 and rotates therewith through the limited arc of movement of the lever in adjusting the spark. The complete ignition system, including the fly-wheel, is mounted within an external housing 13 having a depending peripheral flange 14. The cup-shaped housing 11 and fly-wheel 10 are keyed to and rotate a crank or drive shaft 15 which in turn rotates the propeller (not shown) for operating the boat.

Disposed at the front of the housing 13 is an elongated and arc-shaped member 16 secured to the housing by a pair of end brackets 17, 17. This member throughout the greater portion of its length forms a downwardly opening channel 18 with the rear flange 19 thereof at a point intermediate its length providing a depending lug 20 for supporting and to which is attached a pulley housing or casing 21. At each of its opposite ends the member 16 provides an enclosure or housing 22 in each of which is journalled a pulley wheel 23 upon a stub shaft or pin 24. Tubes or conduits 25 connect the opposite sides of the casing 21 to the adjacent sides of the enclosures or housing 22 and these tubes or conduits are adapted to receive cables for remote operation and control of the motor. To permit ready removal of the member 16 and permit removal of the motor 1 for storage or assembly on another boat, the end brackets are secured thereto by winged nuts 26.

Disposed above the member 16 is the control lever 7 and an upstanding handle 27 for adjusting the spark and gas supply. Generally this handle and lever are moved or adjusted manually by the operator when seated at the rear of the boat, but the present invention contemplates moving and controlling the movement of this handle and lever from the front of the boat. To accomplish this movement, an endless or continuous length of small diameter cable 28 (preferably wire of approximately $\frac{1}{16}$ inch diameter) and having its ends connected by an adjustable turnbuckle 29 is securely clamped or anchored at 30 between a clamping plate 31 and the inturned end 32 of a bracket 33 having its upper end 34 secured to the handle 27 by attaching screws or

the like 35. The end or part 36 of the cable projecting to the right of the lever 7 and handle 27 (see Figs. 3 and 4) passes over the pulley wheel 23, then through the tube 25 and over a pulley wheel 37 rotatably mounted within the pulley housing or casing 21. The cable 28 then passes through one of a pair of flexible tubes 38 and over one of a pair of pulley wheels 39 journalled upon a stub shaft 40 in a housing or casing 41 (see Figs. 2 and 6), mounted in the bottom of the boat at the stern end. Next the cable passes through one of a pair of tubes or conduits 42 having one end disposed in the casing 41 and the other end in a housing or casing 43, the cable passing over one of a pair of pulley wheels 44 rotatably mounted on a stub shaft 45 in the housing or casing 43 secured in a corner and beneath a knee at the rear of the boat. This cable 28 then extends from the pulley 44 along one side of the boat to adjacent the forward end thereof where it passes into a housing or pulley casing 46 secured to a side of the boat adjacent the operator's seat 47 and steering wheel 5. In this casing the cable 28 passes over a large pulley wheel 48 and is anchored thereto at 49. This wheel is secured upon a stub shaft 50 and pinned to the outer end of the shaft is a control handle 51.

The section 52 of the length of endless cable 28 continues around the pulley wheel 48, over the small pulley wheel 53 and then rearwardly along one side of the boat and parallel to the other section of the cable where the ends are preferably connected by the turnbuckle 29. It then passes into the casing 43, over the other pulley wheel 44, other parallel tube or conduit 42 and into the housing or casing 41. In this casing it passes over the second pulley wheel 39, through the other or second flexible tube 38 and over the second pulley wheel 37 in the housing or casing 21. It then passes through the other tube or conduit 25, pulley wheel 23 and anchored or clamped at 30 to the clamping plate 31 and between it and the inturned end 32 of the bracket 33.

Thus by rotating the control handle 51 and its stub shaft 50, the large pulley wheel 48 is rotated in a clockwise or counter-clockwise direction and the endless cable moves the single lever 7 to the right or left to thereby advance the spark and increase the gasoline or fuel feed, or to retard the spark and decrease the feeding of the gasoline or fuel. As stated above, the single lever as shown controls both the spark and fuel supply and the latter is accomplished by providing the lever 7 with the cam 8 in the form of a depending bracket 54 secured to or formed on the underside of the lever. The cam face 55 is adapted to engage or contact an upstanding projection or roller 56 disposed at the outer end of an arm 57 pivotally mounted upon the upstanding shaft 58 controlling the carburetor 9. A stop 59 engages the cam face 60 on the arm 57 and limits its throw or path of movement. The carburetor may be of any suitable design and may be provided with an adjustment at 61 for controlling the flow of gasoline or fuel.

It will be appreciated that the means and manner of mounting the attachment including the housing 21, the solid, endless cable passing over a plurality of pulleys and through the flexible tubing 38, permits the outboard motor to be rotated or turned through any angle or arc required for proper steering. This flexibility of mounting and the manner of connecting the

single control lever 7 to the remote control handle 51 further permits accurate adjustment and control of the lever 7 throughout its arc of movement, which on many of the standard forms of outboard motors approximates nine inches.

From the above description and the disclosure in the drawings, it will be readily apparent that the present novel invention controls the operation of the outboard motor by regulating and controlling the advancement and retarding of the spark and at the same time controls the supply of fuel to the motor. Thus the control is effective between stop position and maximum speed. Also by making the parts so that they may be quickly assembled or removed, the present novel attachment may be quickly applied or disassembled when desired.

Having thus disclosed my invention, I claim:

1. Control mechanism for outboard motors of the type provided with a single control lever for controlling the speed of the motor, comprising an attachment removably mounted upon the motor housing, a manual control handle rotatably mounted adjacent the forward end of the boat, a relatively large pulley wheel mounted on the handle and adapted to be rotated therewith, an endless cable secured to the pulley wheel and to the control lever on the motor, and a system of pulley wheels at the rear of and in the attachment over which the cable is moved by rotating the control handle and thereby moving the control lever through its full arc of movement and whereby to effect the operation of the motor from stop to maximum speed.

2. Mechanism for the remote control of an outboard motor of the type provided with a single control lever for controlling the speed of operation, comprising an attachment adapted to be quickly secured to the motor housing and removable therefrom to permit removal of the motor for use upon another boat, said attachment having an arcuate member, a bracket detachably secured to the lever and an endless cable connected to the bracket and lever for moving the lever along said arcuate member, and control means in the boat remote from the motor to which the cable is also connected and whereby movement of said control means moves the cable and lever to any position between stop and full speed.

3. Remote control mechanism for controlling the speed of operation of an outboard motor boat from stop to maximum and associated with the single control lever on the motor for controlling its operation by controlling the spark and fuel supply, comprising control means mounted adjacent the operator's seat and remote from the motor and rear of the boat, a system of pulleys rotatably mounted adjacent the rear of the boat, a detachable mounting secured to the motor housing adjacent the control lever and housing additional pulleys, and an endless cable connected to the control means and passing over said pulleys and to said detachable mounting where it is connected to the lever for synchronously moving the lever upon movement of the cable by the control means.

4. Remote control mechanism for an outboard motor boat and connected to the single control lever of the outboard motor for controlling the speed of operation of the boat by simultaneously controlling the spark and fuel supply, comprising a control handle disposed adjacent the operator's seat and remote from the rear of the boat, a detachable housing adapted to be mounted upon the

motor adjacent the control lever, pulley wheels rotatably mounted in the housing, a bracket detachably mounted on the control lever and projecting into the housing, an endless cable secured to the bracket and control lever and to the remotely positioned control handle and passing over the pulley wheels whereby rotation of the control handle moves the cable and the control lever from stop position to fully open position and irrespective of the turning movement of the motor in steering.

5. Control mechanism for an outboard motor boat by regulating the speed of operation of an outboard motor through remote control and movement of its control lever from an "off" or stop position to an "on" or fully open position, comprising a member detachably secured to the motor housing adjacent the control lever, a bracket detachably mounted on and depending from the control lever and movable along said member, a rotatable control member disposed in the boat forward of the motor for moving and remotely controlling the movement of the control lever, and an endless cable connected to the control member and to the bracket on the control lever whereby rotating the control member automatically moves the control lever from its "off" or stop position to its fully "on" or open position in which the motor is operated at maximum speed.

6. Remote control mechanism for operating an outboard motor from the forward part of the boat and in combination with an outboard motor of the type provided with a single control lever for controlling its speed of operation, comprising an adjustable control disposed in the forward part of the boat and having a path of movement sufficient to move the control lever on the motor through the limits of its movement, a cable connected to said control and a system of pulley wheels in the boat over which the cable passes, an elongated member substantially conforming to the motor housing, means for detachably mounting said member on the motor housing and adjacent to the control lever, a system of pulley wheels in said member for receiving the cable, and means for detachably connecting the cable to the control lever whereby moving the control in the forward part of the boat causes movement of the connected cable, and the latter in turn moves the control lever from its stop position to a position for operating the motor at any desired speed.

7. Remote control mechanism for controlling the speed of operation of an outboard motor boat from stop to maximum and associated with a standard control lever on the motor, comprising a part mounted on the motor housing and including an elongated hollow member disposed forwardly of the motor and detachably connected thereto, a bracket having an end projecting into said member and connected at the other end to the control lever, a cable connected to the end of the bracket in said member, and control means provided in the boat and remote from the motor and control lever and connected to the cable whereby moving said control means causes simultaneous movement of the cable and control lever to thereby control the operation of the motor.

8. Control mechanism for controlling the speed of operation of an outboard motor by remote control from the forward part of the boat and associated with a standard control lever on the motor, comprising a channelled member detachably mounted on the motor and disposed beneath the outer end of the control lever, a bracket detachably mounted on and depending from the control

lever and having a part projecting into and movable in the channel of said member, control means provided in the boat and remote from the motor and control lever and an endless cable connected to the bracket and control means whereby moving said control means causes simultaneous movement of the cable and control lever to thereby control the operation of the motor, said member and bracket when disconnected from the motor and control lever permitting the motor to be bodily removed for use on another boat.

SIMON E. SCHROEDER.

REFERENCES CITED

The following references are of record in the file of this patent:

UNITED STATES PATENTS

Number	Name	Date
929,174	Thibert	July 27, 1909
1,059,744	March	Apr. 22, 1913
1,843,272	Evinrude	Feb. 2, 1932
1,957,647	Horak	May 8, 1934
2,238,574	Thomas et al.	Apr. 15, 1941

FOREIGN PATENTS

Number	Country	Date
400,438	Great Britain	Oct. 26, 1933