(No Model.)

T. WOERNER, Sr.

ICE CREAM FREEZER.

No. 590,445. Patented Sept. 21, 1897.

FIG. 1.

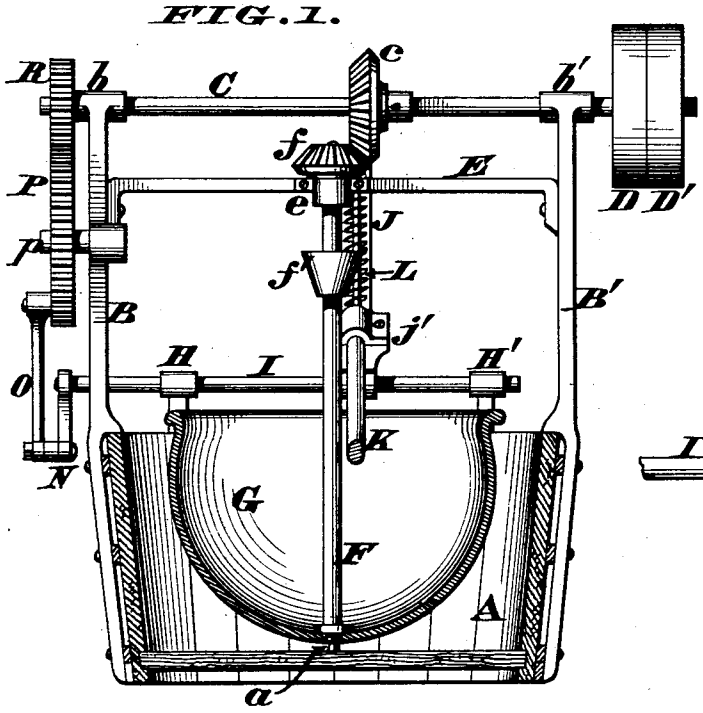

FIG. 3.

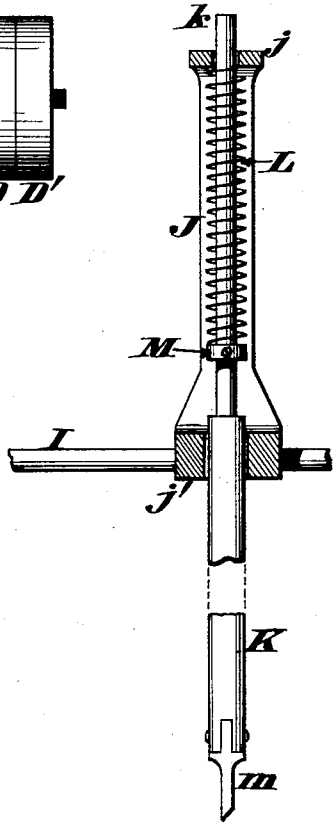

FIG. 2.

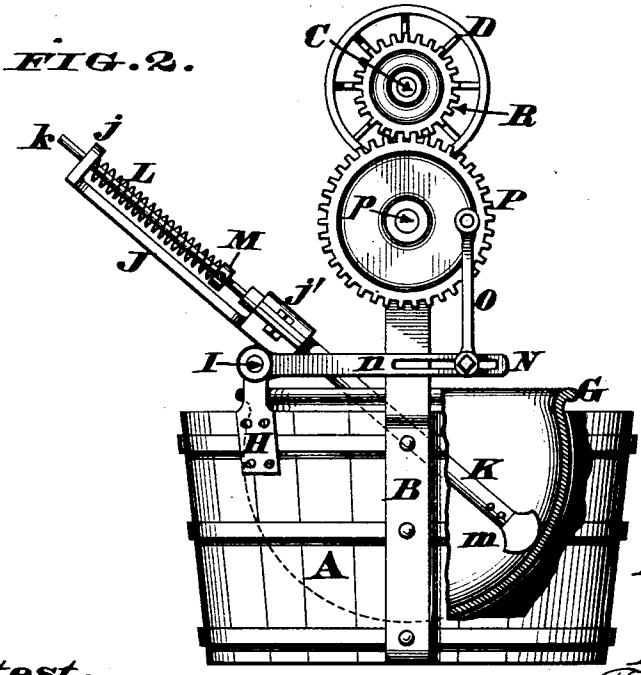

FIG. 4.

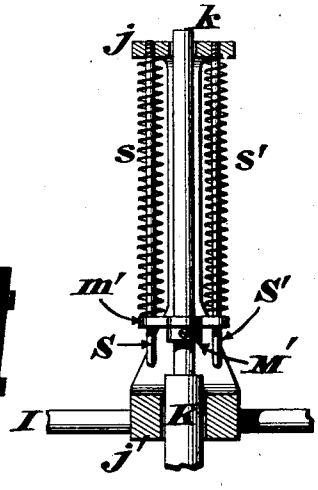

Attest.
Ida A. Fleitz
Samuel McQuinn

Inventor.
Theodore Woerner, Sr.
by James N. Layman.
Atty.

THE NORRIS PETERS CO., PHOTO-LITHO., WASHINGTON, D. C.

UNITED STATES PATENT OFFICE.

THEODORE WOERNER, SR., OF BELLEVUE, KENTUCKY.

ICE-CREAM FREEZER.

SPECIFICATION forming part of Letters Patent No. 590,445, dated September 21, 1897.

Application filed January 27, 1897. Serial No. 620,847. (No model.)

To all whom it may concern:

Be it known that I, THEODORE WOERNER, Sr., a citizen of the United States, residing at Bellevue, in the county of Campbell and State of Kentucky, have invented certain new and useful Improvements in Ice-Cream Freezers; and I do hereby declare the following to be a full, clear, and exact description of the invention, reference being had to the annexed drawings, which form a part of this specification.

This invention relates to those ice-cream freezers which include an outer tub, a cream vessel revolving therein, and a paddle or stirrer that agitates the contents of said vessel; and my improvement comprises a novel combination of devices which permits the stirrer to automatically shift longitudinally in order that its effective end may be kept in yielding contact with the inner side of the cream vessel no matter what shape the latter may be, as hereinafter more fully described.

In the annexed drawings, Figure 1 is a vertical section of my improved ice-cream freezer, said section being taken in the plane of the driving-shaft. Fig. 2 is a side elevation of the machine, a portion of the tub and freezing vessel being broken away and sectioned. Fig. 3 is an enlarged view of the stirrer detached from the machine. Fig. 4 shows a modification of said stirrer.

In common with many other ice-cream freezers the principal member of my machine is a tub A of any suitable size and material and having attached to its opposite sides vertical standards B B′, provided with journal-bearings *b b′* for a horizontal driving-shaft C. This shaft may be run with a crank, but usually it carries a fast pulley D and loose pulley D′ for the reception of a belt driven by suitable power.

E is a brace connecting these standards and having a journal *e* for a vertical shaft F, occupying an axial position with reference to the tub A and provided at its upper end with a bevel-pinion *f*, engaged with a gear *c* of the driving-shaft C. These bevel-gears *c f* are preferably so arranged as to run the shaft F at a somewhat higher speed than the shaft C.

Shaft F is rigidly secured at its lower end to the center of the freezing vessel proper, G, the inner or concave surface of which is here shown as being the arc of a circle, but this shape may be departed from, if desired. Again, this vessel is usually of metal and is centered upon a pin *a*, projecting from the tub-bottom. Shaft F has attached to it a cup *f′*, that receives oil or other drippings that may run down from the bevel-gears *c f*.

H H′ are short vertical standards rigidly secured to the tub and having journaled in them a horizontal rock-shaft I, to which latter there is fastened at any proper angle a stock J, provided with a pair of guides or boxes *j j′* for a stirrer K. The upper portion of this device K is reduced in diameter to afford a spindle *k*, around which is coiled a spring L, that normally forces said stirrer toward the vessel G, the tension of said spring being regulated by an adjustable collar M. The lower or effective end of this stirrer may be provided with any approved form of scraper *m* capable of removing cream from the inner surface of the vessel G.

Secured to one end of rock-shaft I is a lever N, slotted longitudinally at *n* so as to be adjustably coupled to a connecting-rod O, operated by a gear-wheel P, engaged with a pinion R of the driving-shaft C. Wheel P is journaled upon a stud-shaft *p*, projecting laterally from the standard B.

My freezer is operated in the following manner: The annular space between tub A and vessel G is first properly filled with broken ice and salt or other suitable congealing mixture, and then cream is poured into said vessel G, after which act the machine is set in motion. It is immaterial which way the shaft F is turned, as the freezing vessel G turns in unison with it, and as said vessel revolves the stirrer K vibrates up and down within it, the scraper *m* of said stirrer describing about a fourth of a circle, or, in other words, at every sweep of the stirrer the device *m* travels from the top down to the center or bottom of the freezing vessel and is held against the latter with a yielding pressure due to the action of the spring L. Consequently this yielding pressure enables the scraper to keep constantly in contact with the interior of the vessel G no matter whether it is truly circular or elliptical or other irregular shape. Again, by properly adjusting the connecting-rod O along the slot *n* of lever N a greater or less rocking of the shaft I will

be obtained and a corresponding sweep of the stirrer will result. It will thus be seen that the agitation of the cream or other mass and the scraping of the interior of vessel G are automatically effected, thereby doing the work uniformly and thoroughly and without calling in another hand to perform this stirring operation. Again, the pressure on the stirrer is always regular after the collar M is properly adjusted, and on this account there is no danger of such excessive leverage being exerted against said device K as to spring the shaft F or cant the vessel G over to one side and make it run unevenly.

In the modification of my invention seen in Fig. 4 the adjustable collar M′ has a cross-bar *m′*, the ends of which are pierced to permit free play of a pair of parallel rods S S′, whose upper ends are secured to the bearing *j*. *s s′* are coiled springs surrounding these rods and interposed between the bearing *j* and cross-bar *m′*. These springs automatically advance the stirrer and their use enables the employment of a shorter stock than is necessary when a single spring is applied to the machine.

I claim as my invention—

1. The combination, in a freezing-machine, of a stationary outer receptacle; a cream vessel revolving therein; a vibrating stirrer mounted angularly upon said outer receptacle, and capable of automatically shifting longitudinally, so as to keep its lower end in yielding contact with the interior of said cream vessel, and devices that operate said vessel and stirrer from a common driving-shaft, all as herein described, and for the purpose stated.

2. The tub A provided with standards B, B′, and H, H′; the shaft C journaled in the standards B B′, and furnished with wheels *c* R; the freezing vessel G, revolving within said tub and secured to a shaft F, having a bevel-wheel *f* engaged with the bevel-wheel *c;* the rock-shaft I journaled in the standards H H′, and carrying the stock J *j j′;* the automatically longitudinally-shiftable stirrer K *k*, fitted to said stock; the lever N fastened to said rock-shaft I, and slotted longitudinally at *n;* and the rod O connecting said lever to a wheel P, driven by the wheel R of shaft C, all as herein described, and for the purpose stated.

In testimony whereof I affix my signature in presence of two witnesses.

THEODORE WOERNER, SR.

Witnesses:
JAMES H. LAYMAN,
JESSE M. SIMON.