July 8, 1947. H. I. DAVIS ET AL 2,423,687

GEL-POINT INDICATOR

Filed Aug. 24, 1944

FIG. 1.

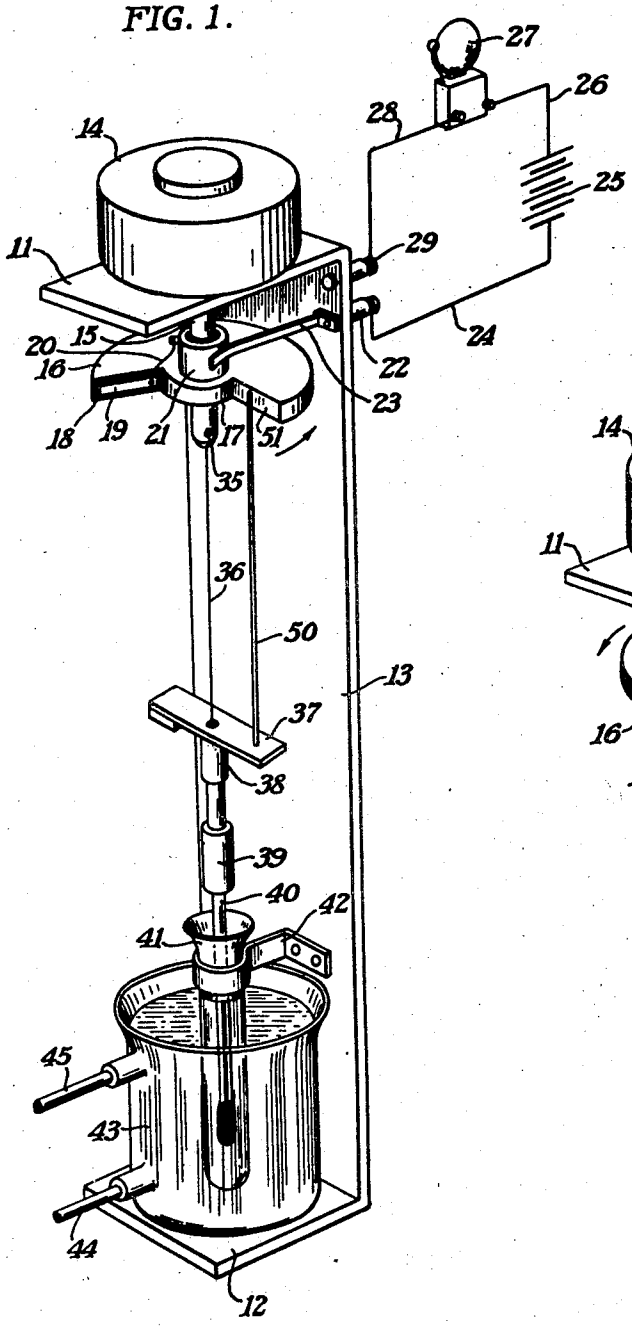

FIG. 2.

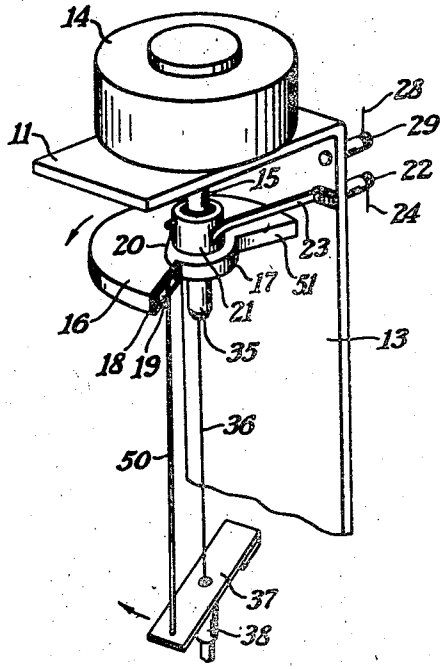

HARRY I. DAVIS
DANIEL E. FARWELL
INVENTORS

BY J. Griffin Little
ATTORNEYS

Patented July 8, 1947 2,423,687

UNITED STATES PATENT OFFICE

2,423,687

GEL-POINT INDICATOR

Harry I. Davis and Daniel E. Farwell, Rochester, N. Y., assignors to Eastman Kodak Company, Rochester, N. Y., a corporation of New Jersey

Application August 24, 1944, Serial No. 551,029

2 Claims. (Cl. 177—311)

1

The present invention relates to an apparatus, and more particularly to an apparatus for indicating the gel-points of cellulose derivative solutions which undergo gelation upon cooling.

The use of cellulose ester solutions which are capable of gelation upon cooling is becoming more and more extensive for making transparent films and lacquer coatings. These solutions comprise various cellulose organic acid esters dissolved in suitable solvents to provide mixtures which are liquid above a temperature of about 50° C., and which set to self-supporting gels as the temperature is lowered to a point within the range of 10° to 50° C. The specific temperatures involved depend, of course, on the particular constituents used in the cellulose ester dope or lacquer. However, in order to secure the best results, it is necessary or desirable to know the temperature at which the particular dope or lacquer to be used will gel so that the cooling mechanism can be properly arranged. As the present invention in no way relates to the preparation of these solutions, but only to an apparatus for determining the gel-points, a description of the dopes is omitted. Cellulose ester solutions of various compositions which undergo gelation are, however, fully described in the patents to Fordyce and Clark, Nos. 2,350,742, 2,350,743, and 2,350,744, to which reference may be made.

The present invention has, therefore, as its principal object the provision of an apparatus for determining the gel-points of various lacquers or solutions which undergo gelation upon cooling.

A further object of the invention is the provision of an apparatus of this type which is simple in construction, easy to operate, and accurate and positive in its results.

Another object of the invention is the provision of an apparatus of the type described which does not require constant attention of the attendant during the course of the gel-point determination test.

To these and other ends, the invention resides in certain improvements and combinations of parts, all as will be hereinafter more fully described, the novel features being pointed out in the claims at the end of the specification.

In the drawings:

Fig. 1 is a perspective view of a gel-point indicating apparatus constructed in accordance with the present invention, showing the relation of the parts prior to the reaching of the gel-point; and

Fig. 2 is a view similar to Fig. 1 but illustrating only the upper part of the apparatus, and showing the relation of the parts when the gel-point has been reached.

2

In the drawings there is shown a preferred embodiment of the invention which comprises, in general, a support in the form of a channel-shaped frame having an upper leg 11, a lower leg 12, and an intermediate or connecting portion 13. A 1 R. P. M. synchronous motor 14 is mounted on the leg 11 and is connected, in a well-known manner, to a suitable source of electric power. The shaft 15 of the motor 14 extends through and below the leg 11 and has mounted thereon a timing plate 16 of suitable insulating material. This plate is provided with a cut-out portion or section 17 which extends over approximately 130 degrees, as is apparent from the drawings. One edge 18 of this cut-out portion 17 has secured therein a plate or contact 19 which is connected by a lead 20 to a collar 21 carried by but insulated from the shaft 15. A terminal 22 is mounted on and insulated from the leg 13 of the channel, and is connected by a brush 23 with the collar 21. The terminal 22 is, in turn, connected by a lead 24 to one side of a battery 25 the other side of which is connected by a lead 26 to a signalling device such as bell or buzzer 27. A lead 28 then connects the buzzer to a terminal 29 mounted on and electrically connected to the portion 13 of the channel, the purpose of which construction will be later more fully described.

The lower end of the motor shaft 15 has secured thereto a collar 35 from which is suspended a torsion wire 36 the lower end of which is connected to a crossarm 37 formed on the upper end of a shaft or sleeve 38. The latter, in turn, is connected through a coupling 39 to a rotary member such as a thermometer 40 adapted to be immersed in a sample of the solution positioned in the tube 41 supported in a suitable bracket 42 connected to the portion 13 of the channel. In order to gel the solution in the tube 41, the temperature of the solution must be lowered to cool the latter to the gel-point which varies with the constituents. Such cooling may be accomplished by immersing the tube 41 in a beaker or jar 43 supported on the leg 12 and supplied with a suitable cooling medium which enters through the supply pipe 44 and is discharged to the pipe 45, as is apparent from an inspection of Fig. 1.

The sensitivity of the test is controlled by the rate of cooling of the test sample in the tube 41. If the cooling is too fast, equilibrium between the solution and the thermometer is not attained and any delay in reading the temperature at the time of gelation will result in error. Results of

plus or minus 0.2° F. may be obtained by using water at about 50 to 60° F. as the cooling medium in the beaker or jar 43. With such a cooling medium the test requires about 10 or 12 minutes to complete. Ice water may be used to shorten the period to about 5 minutes if results of plus or minus 1.0° F. are acceptable.

At the start of the test, the parts are in the position shown in Fig. 1 with the solution to be tested in the tube 41 and the cooling medium surrounding the tube in the beaker 43. In this position, a contact in the form of a pointer 50 carried by the crossarm 37 extends upwardly and into engagement with the other edge 51 of the cut-out portion 17, as clearly illustrated in Fig. 1. As the test continues and the solution is being cooled, the motor shaft 15, collar 35, wire 36, crossarm 37, sleeve 38, coupling 39, and thermometer 40, all rotate as a unit. The wire 36 is of sufficient diameter, 0.010 inch, so that the drag of the cooling solution on the thermometer 40 is not sufficient to cause an appreciable twisting of the wire. However, when the point is reached at which the cooling solution in the layer surrounding the thermometer has gelled, the very great increase in resistance to turning exerted on the thermometer 40 causes the latter to lag behind the rotation of the motor 14. This lag imparts a twist in the wire 36 and causes the contact pointer 50 to quickly move from the position shown in Fig. 1 to that shown in Fig. 2 to clearly indicate that the solution has reached the gel-point or temperature. The temperature of the gel-point may then be read directly from the thermometer 40, as is apparent.

As the test lasts about 10 to 12 minutes, it is desirable not to require the attention of the operator during the cooling operation, but when the solution has been gelled, he should be immediately notified of that fact so that the reading on the thermometer may be taken to definitely ascertain the exact gel-point or temperature. It is for this reason that the signalling device illustrated in Fig. 1 is used. When the parts reach the position illustrated in Fig. 2, at the gel-point of the solution, the electrical circuit is completed from the battery 25 through lead 26, buzzer 27, lead 28, terminal 29, channel portion 13 to motor 14, then through shaft 15, collar 35, wire 36, crossarm 37, pointer 50, contact 19, lead 20, collar 21, bush 23, lead 24, back to the battery 25. It is thus apparent that the contact 19 and pointer 50 are arranged in the circuit of the battery 25 and buzzer or signalling device 27, and that these contacts are normally separated to open the circuit to the signalling device as clearly illustrated in Fig. 1. However, when the solution has gelled, the pointer 50 is moved, as above described, to the position shown in Fig. 2 at which time it engages the contact 19 to close the circuit through the battery 25 and the buzzer 27 to actuate the latter to thus notify the operator that the gel-point has been reached. The operator then reads the gel-point on the thermometer 40.

By means of the apparatus above described, the gel-points of various cellulose derivative solutions or lacquers may be easily, readily, and accurately ascertained. Furthermore, the apparatus required for such a test is simple, relatively inexpensive to manufacture, and consists of few parts of rugged construction. While one embodiment of the invention has been disclosed, it is to be understood that the inventive idea may be carried out in a number of ways. This application is, therefore, not to be limited to the precise details

described, but is intended to cover all variations and modifications thereof falling within the scope of the appended claims.

We claim:

1. An apparatus for determining the gel-point of cellulose derivative solutions which undergo gelation upon cooling comprising a rotary member immersed in a liquid solution, driving means, means including a torsion wire connecting said driving means to said member to rotate the latter in said solution, a timing plate positively driven in unison with said driving means and formed with angularly spaced edges, an electrical contact positioned on one edge of said edges, means for cooling the solution to gel the latter to thereby increase the resistance of rotation of said member to a point sufficient to cause said member to lag behind said driving means, a second contact operatively connected to said member and normally engaging the other edge of said plate but movable into engagement with said one edge and said first contact when said member lags a predetermined amount behind said driving means, a signal circuit connected to said contacts and actuated upon the engagement of said contacts to indicate that the gel-point of said solution has been reached, and temperature indicating means positioned in said solution for indicating the temperature of said gel-point.

2. An apparatus for determining the gel-point of cellulose derivative solutions which undergo gelation upon cooling comprising a thermometer suspended in a liquid solution to measure the temperature thereof, an electric motor having a drive shaft, means including a torsion wire for suspending said thermometer in said solution and for connecting said drive shaft to said thermometer to rotate the latter in said solution, a timing plate of insulating material mounted on and rotated by said shaft, said plate having a cut-out portion to provide a pair of spaced edges, an electrical contact mounted on one of said edges, means for cooling said solution to gel the latter and to thereby increase the resistance to rotation of said thermometer in said gelled solution sufficiently to cause the rotation of said thermometer to lag a definite amount behind said motor, a pointer operatively connected to said thermometer and normally engaging the other edge of said timing plate but movable into engagement with said contact when said thermometer lags said amount, and a signal system connected to said contact and pointer and actuated upon said engagement to indicate that the gel-point of said solution has been reached, the temperature of said gel-point being indicated on said thermometer.

HARRY I. DAVIS.
DANIEL E. FARWELL.

REFERENCES CITED

The following references are of record in the file of this patent:

UNITED STATES PATENTS

Number	Name	Date
1,449,458	Sutermeister	Mar. 27, 1923
2,269,305	Bell	Jan. 6, 1942
2,301,204	Fields et al.	Nov. 10, 1942

FOREIGN PATENTS

Number	Country	Date
165,410	Great Britain	Oct. 23, 1922