May 14, 1929. C. M. GIBSON 1,713,275

HOUSEHOLD UTENSIL

Filed May 10, 1928

FIG. 1

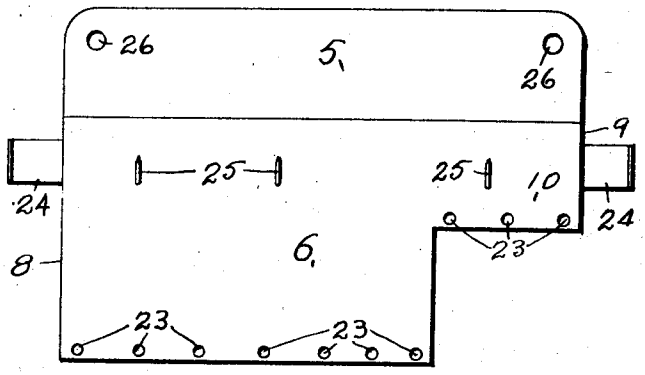

FIG. 2

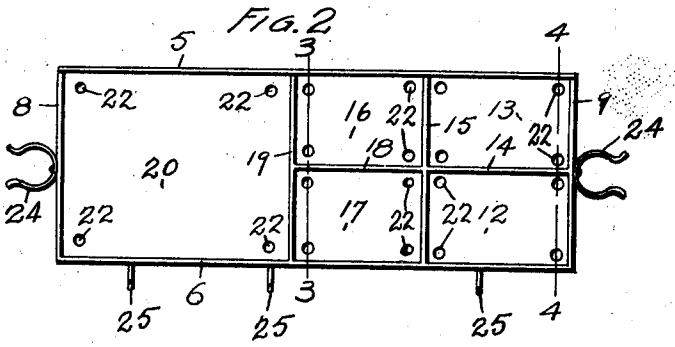

FIG. 3

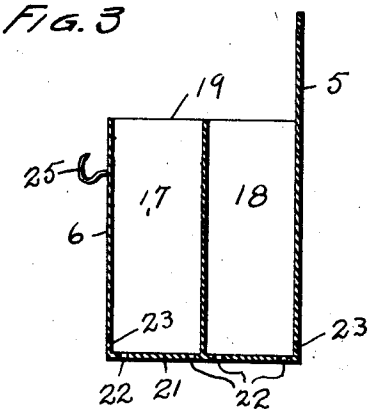

FIG. 4

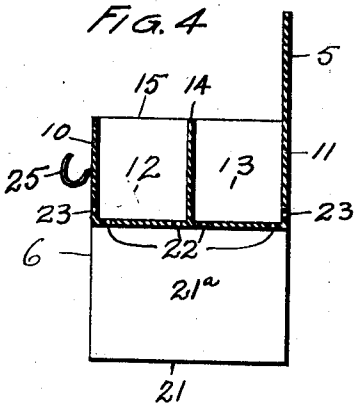

INVENTOR
CORA M. GIBSON
By Edward E Lugan
ATTY.

Patented May 14, 1929. 1,713,275

UNITED STATES PATENT OFFICE.

CORA M. GIBSON, OF ST. LOUIS, MISSOURI.

HOUSEHOLD UTENSIL.

Application filed May 10, 1928. Serial No. 276,632.

My invention relates to improvements in household utensils, and has for its primary object a household utensil which is adapted to contain scrubbing brushes, sponges, soap and similar detergents.

Another object is to construct a household utensil, which is provided with means on its outside for holding brooms, mops and the like, and on which scrubbing rags can be hung.

The device is intended primarily to be placed outside on the porch, being secured preferably to the wall of a house.

In the drawings:

Fig. 1 is a front view of my device;

Fig. 2 is a top plan view of the same;

Fig. 3 is a section taken on the line 3—3 of Fig. 2; and

Fig. 4 is a section taken on the line 4—4 of Fig. 2.

In the construction of my device I employ a rear wall 5, a front wall 6, and end walls 8 and 9. The front and rear walls 5 and 6 have that portion adjacent the wall 9 reduced in width as indicated by the numerals 10 and 11 so as to form a shallow portion, which is divided into compartments 12 and 13 by means of partition walls 14 and 15. The partition wall 15 also acts as a partition wall for the compartments 16 and 17, which are formed by the walls 18 and 19 in connection with the wall 15 thus leaving a large compartment 20 adjacent the end wall 8.

The bottom 21 is formed of a single sheet of metal and is secured to the front and rear walls 6 and 5, and the end wall 8, thus forming a bottom for the compartments 16, 17 and 20. It is then bent upward to form a wall 21^a which closes the lower portion of the compartments 16 and 17. It is then bent horizontally and secured to the reduced portions 10 and 11 and the end wall 9 thus forming a bottom for the compartments 12 and 13. The bottom 21 is provided with a plurality of openings 22, which prevent the accumulation of water or moisture in the various compartments.

The front and rear walls 5 and 6 are provided with openings 23, which permit air to circulate through the various compartments so that articles placed therein can readily dry.

The end walls 8 and 9 are provided with spring clamps 24, which are designed to receive the handles of brooms, mops, or similar devices, so that they can be supported and not rest on the floor.

The wall 6 is also provided with a plurality of hooks 25. These are for suspending scrubbing rags and the like, thereby permitting them to dry readily.

The rear wall 5 is provided with openings 26 by means of which it can be readily attached to a wall or other suitable support.

While I have disclosed my device as being constructed of sheet metal, I do not desire to limit myself thereto as it may be made of cast metal, of porcelain, or it may be made of woven wire without departing from the spirit of my invention. Of course, when the device is made of woven wire, the openings 22 and 23 are unnecessary.

By the use of my device all the cleaning apparatus, such as sponges, scrubbing brushes, rags, soap, or other detergents in block form, as well as brooms and mops, can all be retained in one place, and in such a manner that they will readily dry out thereby preventing them from accumulating a disagreeable odor as well as having them always in a certain place where they can readily be found.

It will also be observed that by my construction I have devised a household utensil which is a unitary structure having deep and shallow ventilated and draining compartments for the retention of various detergents and cleaning devices, and which is provided with means on its outside for supporting various other cleaning implements and cloths so that everything placed in my utensil can thoroughly drain and dry, thus prolonging the life of the various implements and prevent their deformation, such as is the case with brooms, and the like, when the body portion rests on the floor and as aforementioned any of the implements or detergents, which may be moist when placed in the utensil, have every facility for drying out and thereby nauseous odors are eliminated.

Having fully described my invention, what I claim is:—

1. A household utensil comprising a rectangular casing having front, rear and end walls, the front and rear walls being cut away for a portion of their lower edges, a bottom carried by the lower edges of said front, rear and end walls whereby a casing is formed having a deep and a shallow portion, a partition wall carried by the front and rear walls

for separating said deep and shallow portions, and partition walls in said deep and shallow portions for dividing said portions into a plurality of compartments.

2. A household utensil comprising a casing having front, rear and end walls, the front and rear walls being cut away for a portion of their lower edges, a bottom secured to the lower edges of said front, rear and end walls whereby a casing is formed having a deep and a shallow portion, a partition wall carried by the front and rear walls for separating said deep and shallow portions, and partition walls in said deep and shallow portions for dividing said portions into a plurality of compartments, said rear wall extending above the top edge of said casing and being provided with openings whereby the same can be supported by fastening means driven into a wall.

In testimony whereof I have affixed my signature.

CORA M. GIBSON.