Sept. 9, 1958 C. SHORE 2,851,169

COLLAPSIBLE CLOTHESLINE DRYER

Filed Sept. 24, 1956 3 Sheets-Sheet 1

Fig. 2.

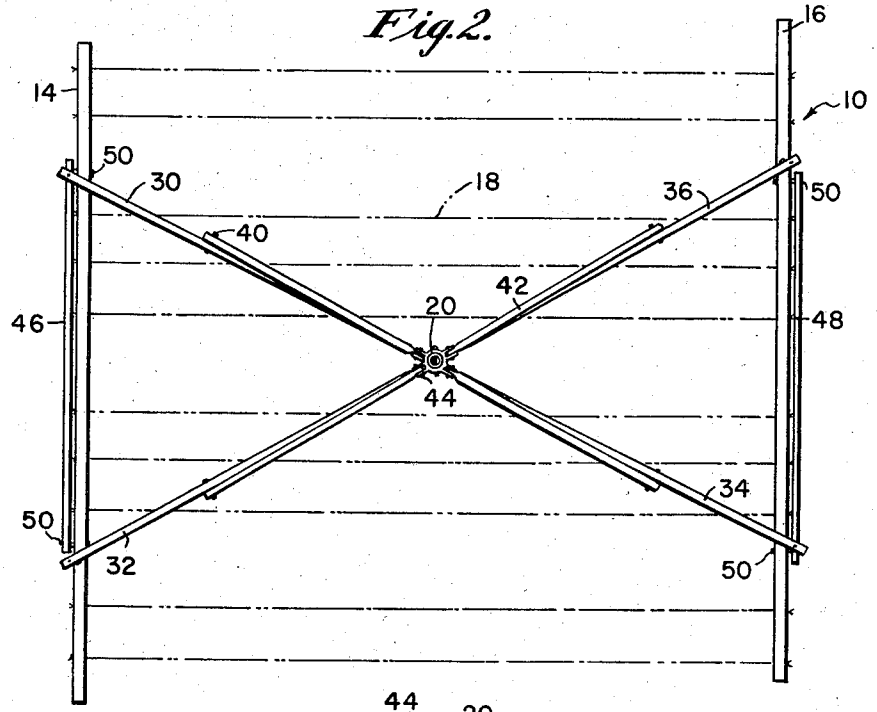

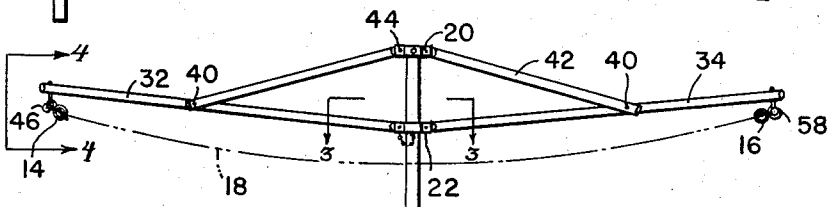

Fig. 1.

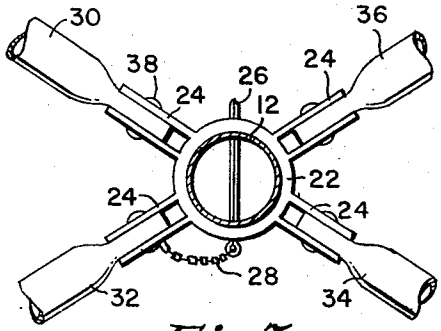

Fig. 3.

INVENTOR.
CHARLES SHORE

BY
Caesar and Rivise

ATTORNEYS.

Sept. 9, 1958 C. SHORE 2,851,169

COLLAPSIBLE CLOTHESLINE DRYER

Filed Sept. 24, 1956 3 Sheets-Sheet 2

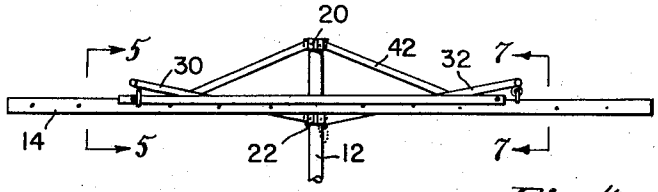

Fig. 4.

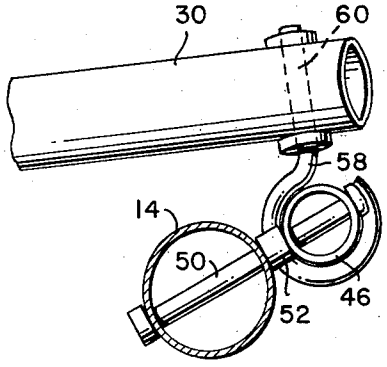

Fig. 5.

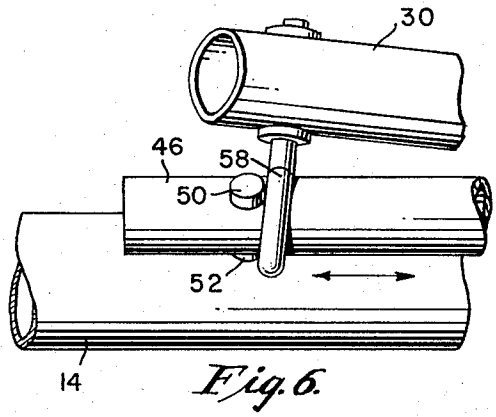

Fig. 6.

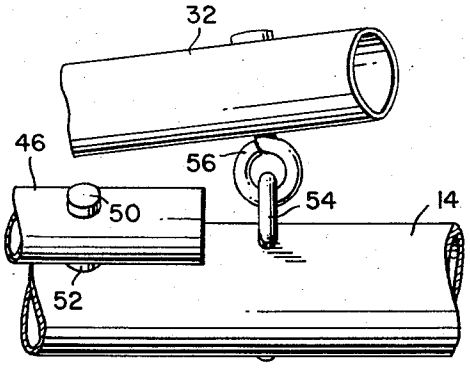

Fig. 8.

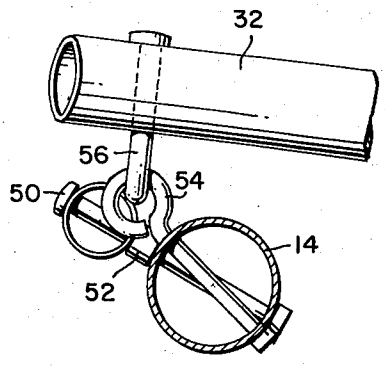

Fig. 7.

INVENTOR.
CHARLES SHORE
BY
Caesar and Rivise
ATTORNEYS.

Sept. 9, 1958 C. SHORE 2,851,169

COLLAPSIBLE CLOTHESLINE DRYER

Filed Sept. 24, 1956 3 Sheets-Sheet 3

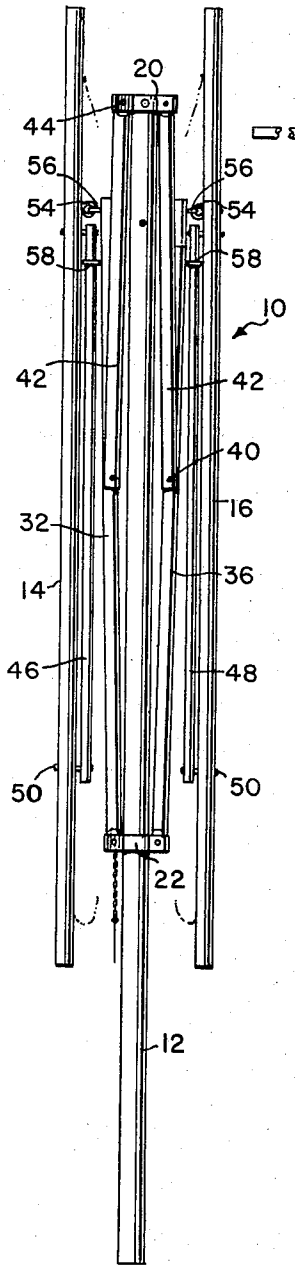

Fig. 11.

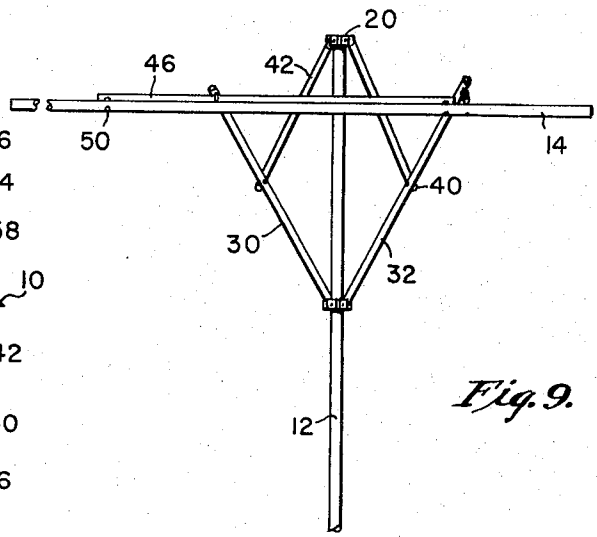

Fig. 9.

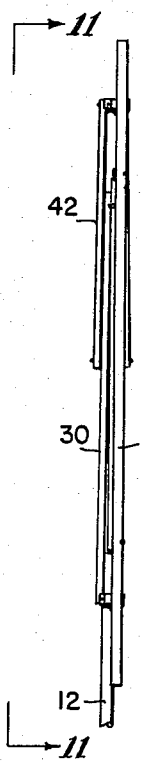

Fig. 10.

INVENTOR.
CHARLES SHORE

BY

Caesar and Rivise

ATTORNEYS.

United States Patent Office 2,851,169 Patented Sept. 9, 1958

2,851,169

COLLAPSIBLE CLOTHESLINE DRYER

Charles Shore, Cheltenham, Pa., assignor to Falco Products Co., Philadelphia, Pa., a corporation of Pennsylvania

Application September 24, 1956, Serial No. 611,437

4 Claims. (Cl. 211—178)

This invention relates to a collapsible clothesline dryer of the type in which the rope arms extend substantially parallel to each other in horizontal positions on both sides of a central post when the dryer is fully unfolded with the clotheslines extending between the rope arms. This is known in the art as a parallel line dryer.

The primary object of this invention is to provide a collapsible parallel line dryer in which the rope arms are operatively connected to the central post by a means which simply and efficiently effects a folding and unfolding of the rope arms.

A further object of the invention is to provide a parallel line dryer in which the rope arms are moved from a folded position vertically adjacent the central post to an unfolded horizontal position by means of a simple and direct acting, slide mechanism which operatively interconnects the rope arms with the central post and which does not interfere with the ropes or clotheslines which are suspended on the arms.

Further objects and features of the invention will become more apparent as the following description proceeds in conjunction with the accompanying drawings, wherein:

Figure 1 is an elevational view of the dryer;

Figure 2 is a top plan view;

Figure 3 is an enlarged section taken on the line 3—3 of Figure 1;

Figure 4 is an end view looking from line 4—4 of Figure 1;

Figure 5 is an enlarged section taken on the line 5—5 of Figure 4;

Figure 6 is a fragmentary perspective view of a structural detail;

Figure 7 is an enlarged section taken on the line 7—7 of Figure 4;

Figure 8 is a fragmentary perspective view of another structural detail;

Figure 9 is an elevational view of the dryer in a partially folded position, one side only being shown for clarity;

Figure 10 is an end view similar to Figure 9 illustrating the dryer in folded position; and

Figure 11 is a side view of the dryer in folded position looking from line 11—11 on Figure 10.

Specific reference is now made to the drawings in which similar reference characters are used for corresponding elements throughout.

The present dryer is generally indicated at **10** and is of the type known in the art as a collapsible parallel line dryer. It comprises a central post **12**, preferably a metal pipe which is adapted to be retained in an upright position in the ground as shown in Figure 1, a pair of unitary rope arms **14** and **16** between which are suspended a plurality of clotheslines **18** and a novel means of interconnecting the rope arms to the central post whereby the rope arms are moved from the collapsed position vertically adjacent the central post as shown in Figure 11 to a position where the rope arms extend horizontally and

substantially parallel to each other on both sides of the central post as shown in Figures 1 and 2.

The means interconnecting the rope arms with the central post comprises a pair of upper and lower collars **20** and **22**, each being provided with pairs of spaced radially extending lugs **24**. The upper collar **20** is fixedly secured adjacent the upper end of the central post whereas the lower collar **22** is slidable on the post and can be retained in an adjusted fixed position by a pin **26** which is adapted to extend through apertures in the central post **12**, the pin being held on the lower collar by an appropriate chain **28**.

Four relatively long brace arms **30**, **32**, **34** and **36** are provided whose inner ends are flattened and received in the spaced lugs **24** of the slide collar **22** and there pivoted as at **38**. The outer ends of these long brace arms are operatively connected to the rope arms **14** and **16** in a manner which will be described hereinafter.

Pivoted intermediate the ends of the long brace arms as at **40** are shorter brace members **42** whose opposite or inner ends are also flattened and received in the lugs of the fixed collar **20** and there pivoted as at **44**.

A pair of elongated rod members **46** and **48** are provided which are shorter than the rope arms **14** and **16**. The rods **46** and **48** are secured adjacent their ends to the respective rope arms **14** and **16** by an elongated double headed bolt or pivot **50**, there being a collar **52** on the shank of the bolt **50** serving as a spacer between the rope arms and the rods, as shown more clearly in Figure 5. The rods **46** and **48** extend substantially parallel to their respective rope arms **14** and **16** as clearly illustrated in the drawings.

The outer ends of the diagonally opposed longer brace arms **32** and **36** are universally connected directly to the rope arms **14** and **16** respectively immediately beyond the respective ends of the rods **46** and **48** as shown more clearly in Figures 2 and 11. This is accomplished by rotatably mounting an eye **54** on each of the rope arms **14** and **16** beyond the corresponding ends of the rods **46** and **48**, which eye engages another eye **56** which is rotatably mounted adjacent the outer ends of the diagonally opposed brace members **32** and **36** as shown clearly in Figures 7 and 8.

The outer ends of the other pair of diagonally opposed brace members **30** and **34** are slidably connected to the rods **46** and **48**. This is accomplished by providing a hook member **58** having a shank **60** which extends diagonally through and is rotatably mounted upon the brace members **30** and **34** adjacent their ends as shown clearly in Figures 5 and 6. The hook members **58** slidably embrace the rods **46** and **48**.

In operation when the dryer is in the collapsed position as shown in Figure 11, the rope arms **14** and **16** extend vertically in a position closely adjacent the central post **12**. In this position the hook members **58** carried at the ends of one pair of the diagonal brace members **30** and **34** are closely adjacent the upper bolts **50** which connect the rods **46** and **48** to the rope arms.

As the collar **22** is slid upwardly on the central post, the larger brace arms **30—36** and smaller brace members **42** begin to unfold and the hook members **58** begin to slide towards the other ends of the rods **46** and **48**. Because of the universal connection **54**, **56** between the diagonal brace members **32** and **36** and the rope arms **14** and **16**, the rope arms begin to rotate from a vertical to a horizontal position and attain the fully horizontal position shown in Figure 2 when the dryer is fully erected, at which point the hook members **58** abut the spacers **52** of the rods **46** and **48** in diagonally opposed positions as shown clearly in Figure 2. The rotation of the rope arms when going from the folded to the unfolded position is in opposite directions because the universal connection be-

tween the longer brace arms and the rope arms is effected at the outer ends of only one pair of the diagonally extending brace arms **32** and **36**.

When the operation is reversed and the dryer is moved from the erected to the folded position, the hook members **58** slide upon the rods **46** and **48** to a position where the weight of the rope arms causes them to turn from a horizontal to a vertical position. The operation is direct and smooth and is such that the mechanism causing the change of the rope arms from a vertical to a horizontal position and vice versa does not interfere with the suspension of the clotheslines. This operation is further rendered smooth because the universal connections **54**, **56** at the ends of the diagonally opposed brace members **32** and **36** extend somewhat beyond the corresponding ends of the rods **46** and **48** as shown clearly in Figures 2 and 11. The spacers **52** on the bolts **50** which connect the ends of the rods **46** and **48** to the respective rope arms **14** and **16** serve as stops to limit the sliding movement of the hooks **58** on the rods.

While a preferred embodiment of the invention has been shown and described herein, minor variations may be made by a skilled artisan without departing from the spirit of the invention or the scope of the appended claims.

I claim:

1. A collapsible clothes dryer comprising a central post adapted to be held in an upright position, a pair of rope arms, four brace arms slidably and pivotally mounted at their inner ends on said post, brace members pivoted at their inner ends to a fixed position on said post above said brace arms and at their outer ends to said brace arms intermediate the ends thereof, rods secured adjacent their ends to each rope arm and extending substantially parallel thereto, means universally pivoting two diagonally opposed ends of said brace arms to said rope arms, and means pivotally and slidably mounting the other two diagonally opposed ends of said brace arms on said rods.

2. The combination of claim 1 wherein said universal pivoting means includes interengaging eye members having shanks which are rotatably secured to said rope arms and to said brace arms adjacent said two diagonally opposed ends.

3. The combination of claim 1 wherein said means pivotally and slidably mounting said other two diagonally opposed ends of said brace arms on said rods includes hook members embracing said rods and having shanks which are rotatably secured to said brace arms adjacent said other two diagonally opposed ends.

4. A collapsible clothes dryer comprising a central post adapted to be held in an upright position, a pair of rope arms, four brace arms slidably and pivotally mounted at their inner ends on said post, brace members pivoted at their inner ends to a fixed position on said post above said brace arms and at their outer ends to said brace arms intermediate the ends thereof, means universally pivoting the ends of two diagonally opposed brace arms to said rope arms adjacent the ends thereof, and means pivotally and slidably connecting the ends of the other two brace arms to parallel rods on said rope arms, whereby said rope arms are supported in the collapsed position vertically adjacent said post and in the extended position substantially horizontal and parallel to each other and spaced from said post.

References Cited in the file of this patent

UNITED STATES PATENTS

1,576,629	Culp	Mar. 16, 1926
2,327,232	Wheeler	Aug. 17, 1943
2,644,592	Campion	July 7, 1953
2,670,855	Pierie	Mar. 2, 1954
2,747,749	Shore et al.	May 29, 1956
2,794,556	Lego	June 4, 1957
2,795,337	Hagar	June 11, 1957