July 18, 1950 R. OSBORNE 2,515,354

WEB FEEDING, PRINTING, AND CUTTING MECHANISM IN TAG FORMING MACHINES

Filed July 12, 1945 5 Sheets-Sheet 1

Fig. 1.

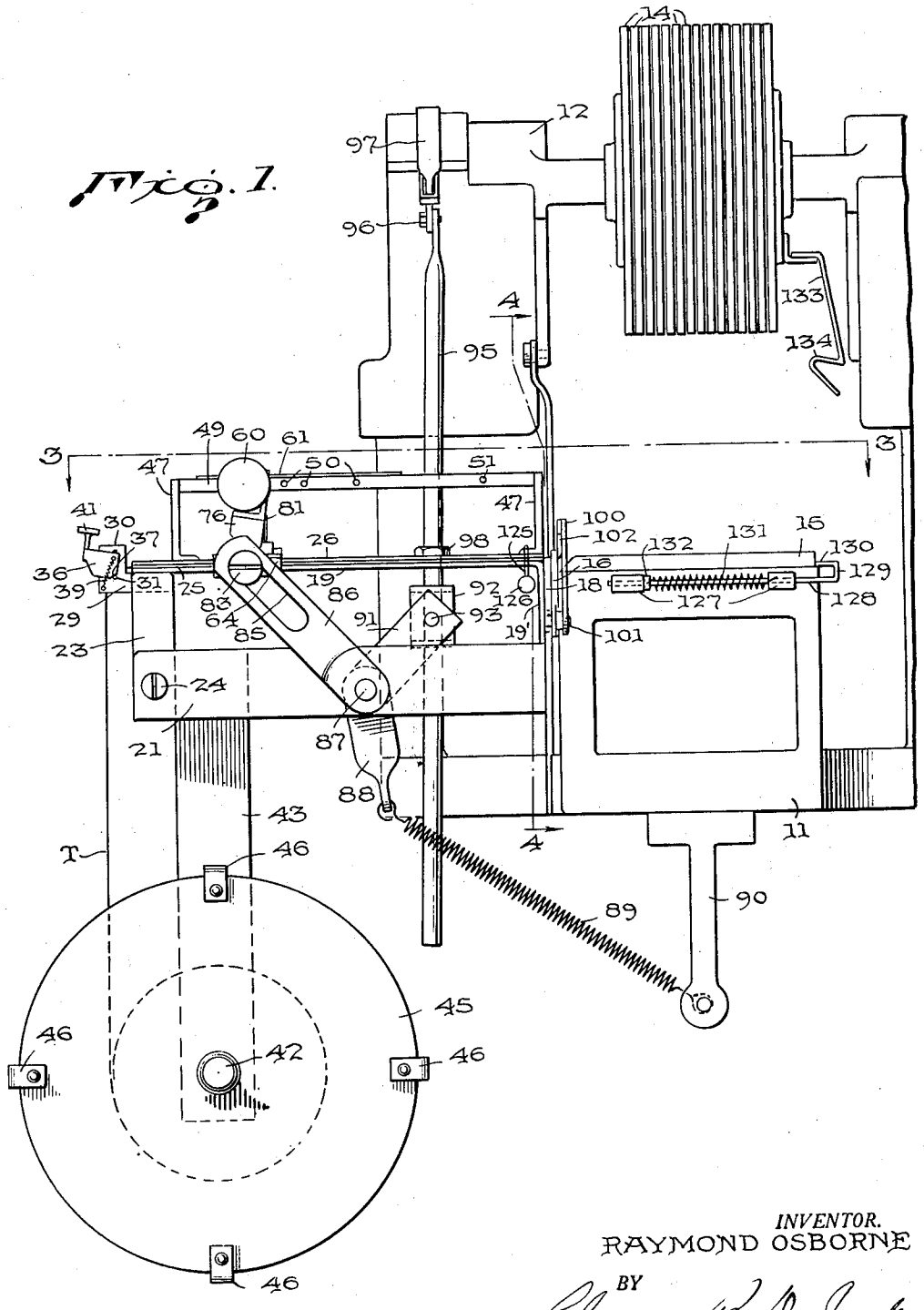

INVENTOR.
RAYMOND OSBORNE
BY
Clarence V. Desjardins
HIS ATTORNEY

July 18, 1950 R. OSBORNE 2,515,354

WEB FEEDING, PRINTING, AND CUTTING MECHANISM IN TAG FORMING MACHINES

Filed July 12, 1945 5 Sheets-Sheet 2

Fig. 2.

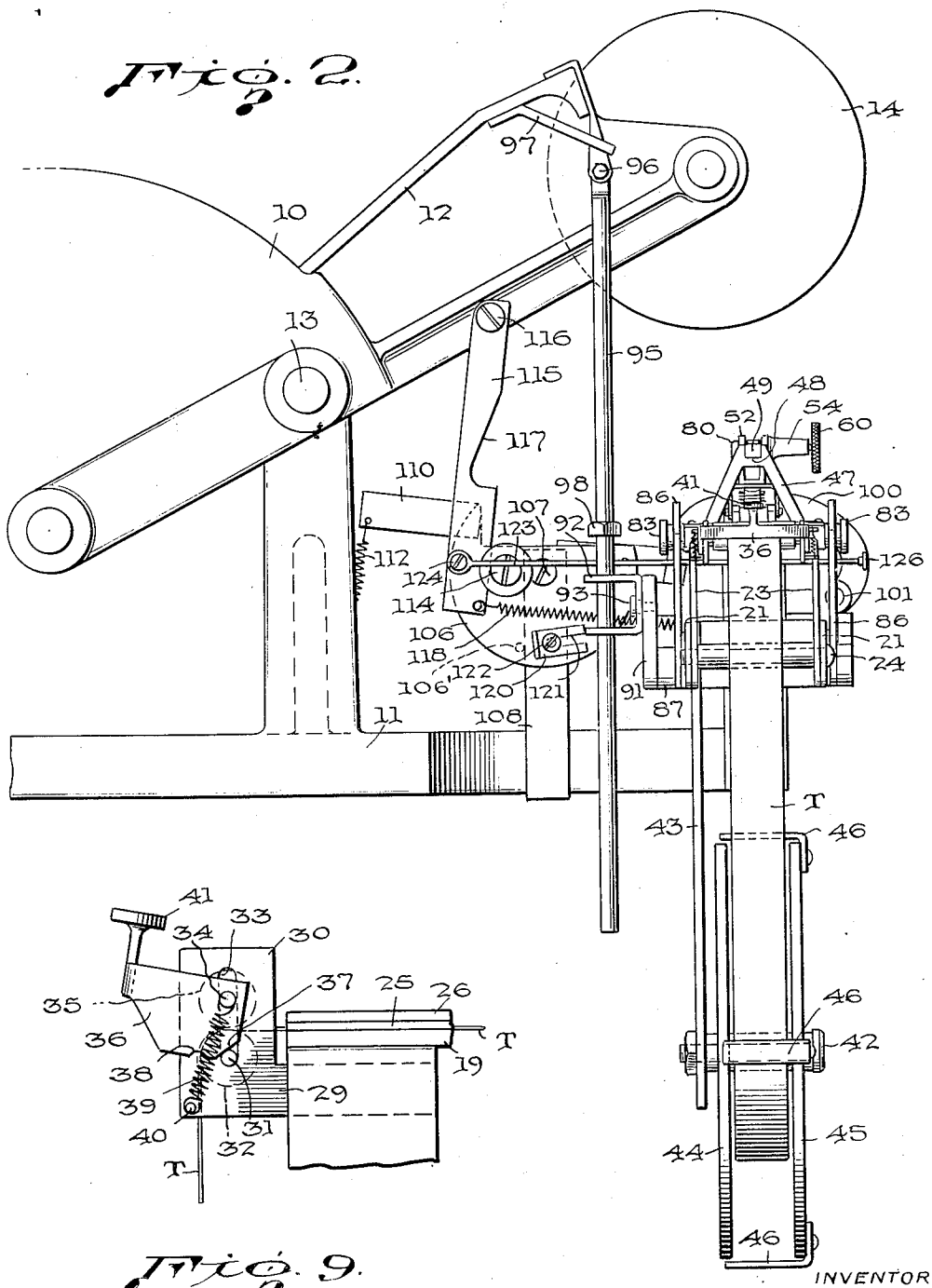

Fig. 9.

INVENTOR
BY RAYMOND OSBORNE
Clarence B. DesJardins
HIS ATTORNEY

July 18, 1950 R. OSBORNE 2,515,354

WEB FEEDING, PRINTING, AND CUTTING MECHANISM IN TAG FORMING MACHINES

Filed July 12, 1945 5 Sheets-Sheet 3

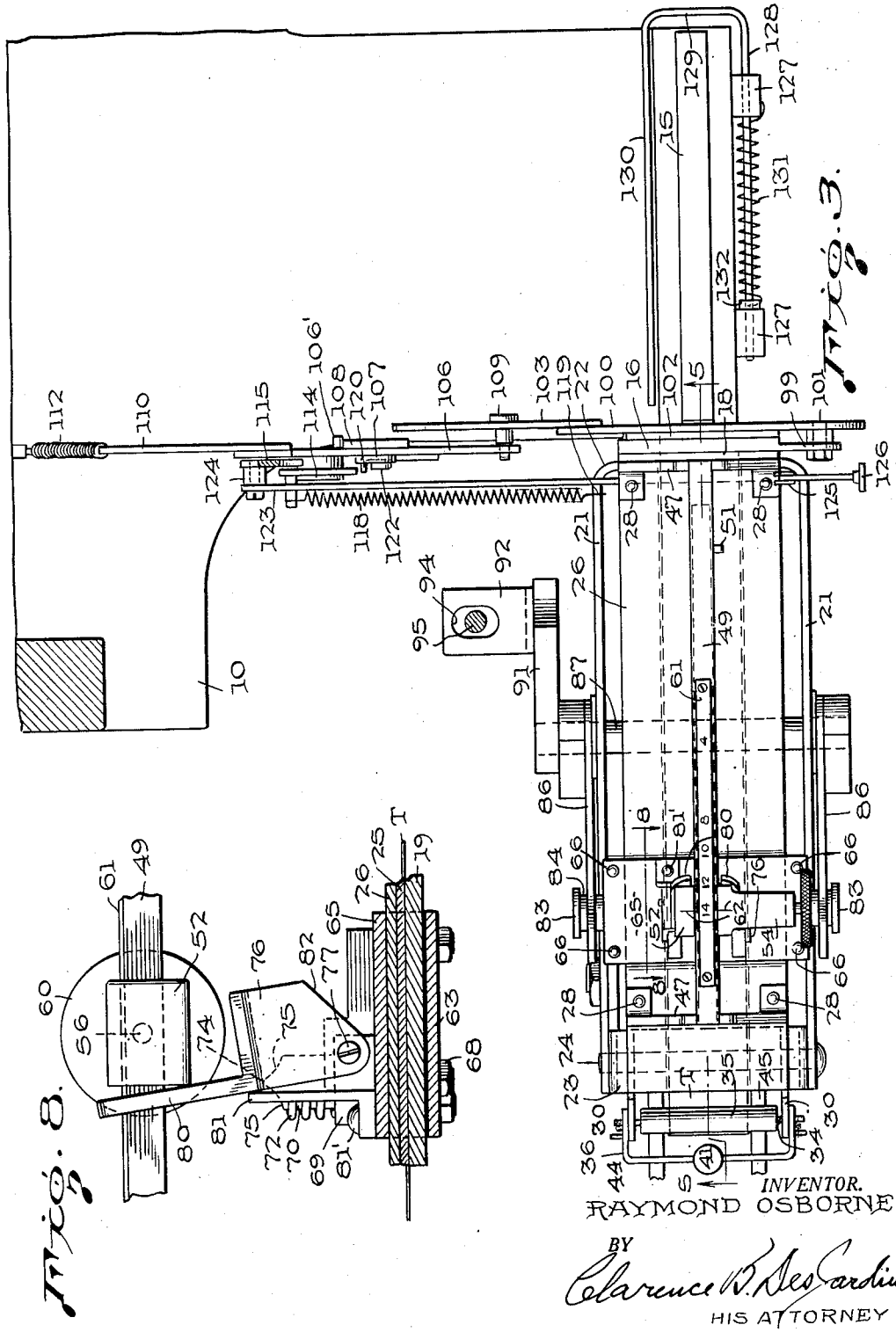

Fig. 3.

Fig. 8.

INVENTOR.
RAYMOND OSBORNE

BY
Clarence B. DesGardins
HIS ATTORNEY

July 18, 1950 R. OSBORNE 2,515,354

WEB FEEDING, PRINTING, AND CUTTING MECHANISM IN TAG FORMING MACHINES

Filed July 12, 1945 5 Sheets-Sheet 4

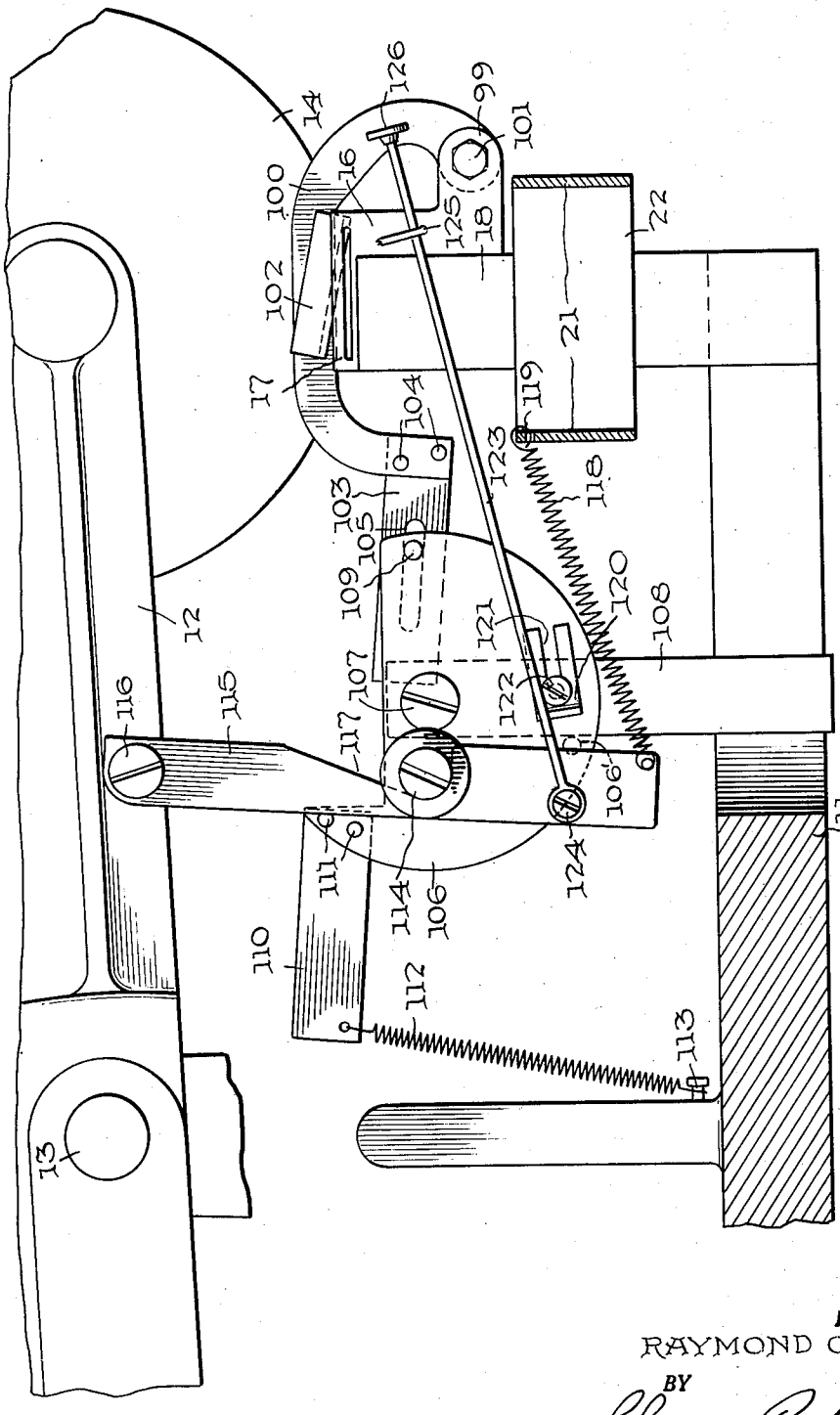

Fig. 4

INVENTOR.
RAYMOND OSBORNE
BY
Clarence B. DesJardins
HIS ATTORNEY

July 18, 1950 R. OSBORNE 2,515,354

WEB FEEDING, PRINTING, AND CUTTING MECHANISM IN TAG FORMING MACHINES

Filed July 12, 1945 5 Sheets-Sheet 5

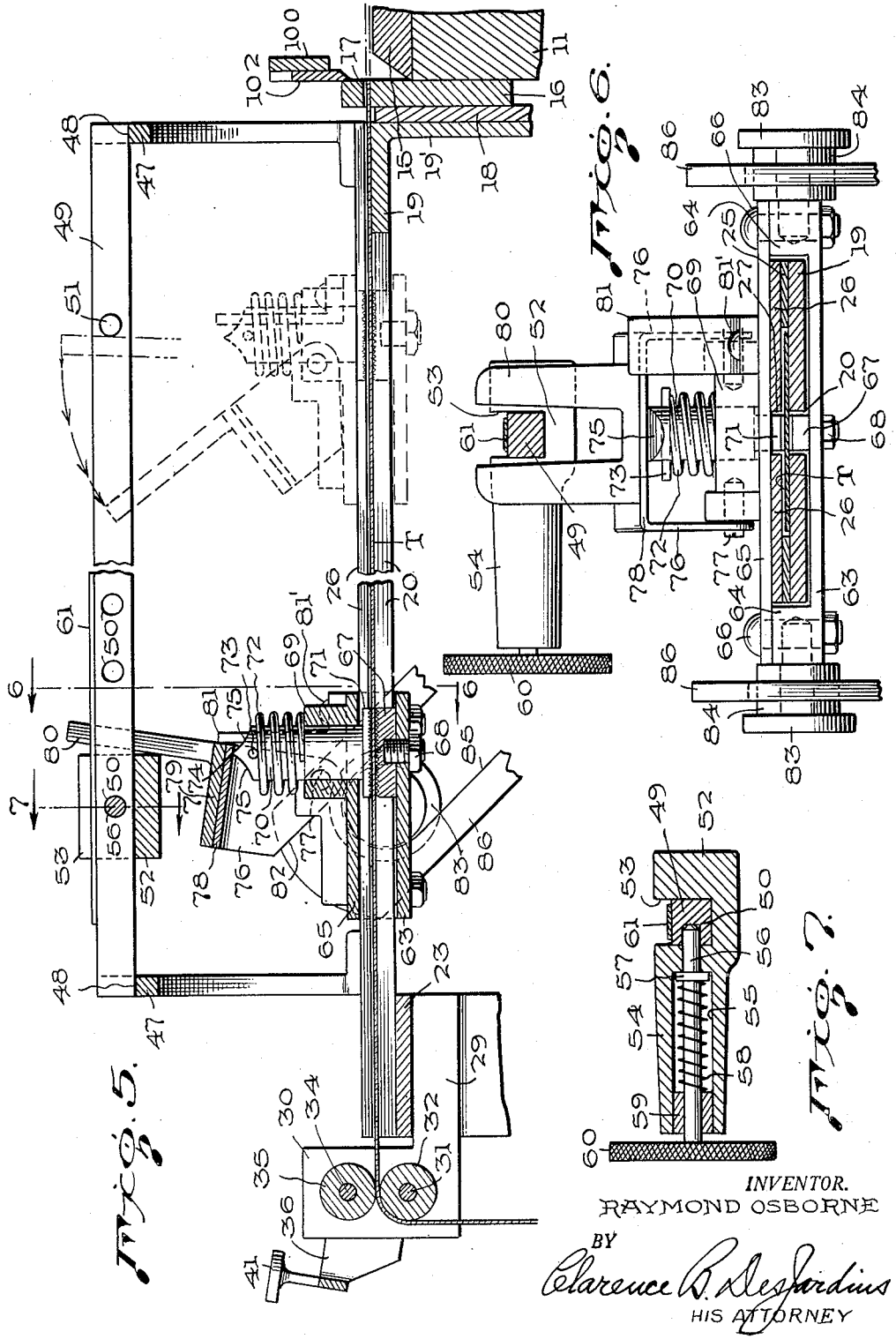

Fig. 5.

Fig. 6.

Fig. 7.

INVENTOR.
RAYMOND OSBORNE
BY
Clarence R. Desjardins
HIS ATTORNEY

Patented July 18, 1950 2,515,354

UNITED STATES PATENT OFFICE

2,515,354

WEB FEEDING, PRINTING, AND CUTTING MECHANISM IN TAG FORMING MACHINES

Raymond Osborne, Pleasant Plain, Ohio, assignor to The National Marking Machine Company, Cincinnati, Ohio, a corporation of Ohio

Application July 12, 1945, Serial No. 604,622

24 Claims. (Cl. 101—291)

1

My invention relates to improvements in tag-forming mechanism and has to do, more particularly, with an attachment, for a marking machine of the class having a platen and a rocking type-carrying head, which feeds a tape across the platen and severs the projecting portion of the tape to form a tag, after a mark has been printed thereon by the marking machine.

The principal object of my invention is to provide an improved means for forming a tag, which is adapted to be attached to a marking machine of the type having a rocking type-carrying head, a platen and means for rocking the head to and from the platen, and which is of such a character that tags of variable length may be formed by a relatively simple adjustment.

A further object of my invention is to provide a tag-forming mechanism for attachment to such a marking machine, which will automatically feed a length of tape over the platen, as the head of the marking machine moves toward the platen, and will automatically sever the projecting portion of the tape as the head moves away from the platen, after having imprinted a mark on said portion of the tape.

Another object of my invention is to provide a tape-feeding mechanism of such character that the machine can be readily and conveniently set to feed different amounts of tape at each operation.

A further object of my invention is to provide an improved tape-severing mechanism for attachment to a marking machine of the sort referred to above, in which a knife is moved across the tape to sever it in the forepart of the return stroke of the marking machine head, and automatically returned to normal during the latter part of said return stroke.

A further object of my invention is to provide tape-severing means forming a part of a tag-forming mechanism, which is provided with manually-operable means for rendering the tape-severing means ineffective.

Further objects, and objects relating to details of construction and economies of operation, will definitely appear from the detailed description to follow. In one instance, I have accomplished the objects of my invention by the devices and means described in the following specification. My invention is clearly defined and pointed out in the appended claims. A structure constituting a preferred embodiment of my invention is illustrated in the accompanying drawings, forming a part of this specification, in which

Fig. 1 is a view in front elevation of part of a

2

marking machine having my improved tag-forming mechanism attached thereto.

Fig. 2 is a view in side elevation of said marking machine and tag-forming mechanism.

Fig. 3 is a horizontal, sectional view through the marking machine, taken on the line 3—3 of Fig. 1 and showing the tag-forming mechanism in top plan.

Fig. 4 is a vertical, sectional view taken on the line 4—4 of Fig. 1 and illustrating the tape-severing mechanism, the parts being shown in the positions they occupy when the type-carrying head of the marking machine is at the end of its downstroke.

Fig. 5 is an enlarged, vertical, sectional view, taken on the line 5—5 of Fig. 3, showing in full lines the tape-clamping carriage at the beginning of the downstroke of the marking machine head, and, in dotted lines, the position it occupies at the end of the downstroke.

Fig. 6 is a detail, sectional view taken on the line 6—6 of Fig. 5.

Fig. 7 is a detail, sectional view taken on the line 7—7 of Fig. 5.

Fig. 8 is a detail, sectional view taken on the line 8—8 of Fig. 3, and

Fig. 9 is a fragmentary view in side elevation of the mounting for the tension rolls, between which the tape passes to the tape-feeding device.

The same reference numerals refer to the same parts throughout the several views, and the sectional views are taken looking in the direction of the arrows at the ends of the section lines.

In general, the tag-forming mechanism of my invention comprises means for feeding tape over the platen of a marking machine, that is actuated by the rocking of a type-carrying head toward said platen, and means for severing the portion of the tape fed over the platen, that is actuated by the rocking of said head away from the platen. The means for feeding tape over the platen may comprise a carriage movable along a guideway for directing the tape to and over the platen, and means for moving the carriage toward the platen actuated by the rocking of the type-carrying head toward it. The means for feeding the tape toward the platen may include spring means for moving said carriage away from the platen, during the return stroke of the type-carrying head. The means for feeding the tape to and over the platen may include a means for gripping the tape, which gripping means is moved toward the platen by the rocking of the type-carrying head toward it. It may include means for automatically releasing the gripping means, to free the tape at

a predetermined point in the movement of the gripping means toward the platen. It may also include automatic means for causing the gripping means to grip the tape, at a predetermined point in its movement away from the platen. The tape-feeding means may well include a guideway for the tape, on which a carriage is movable toward and from the platen upon the rocking of the type-carrying head of the marking machine. This carriage may have clamping means which are caused to clamp the tape, at a predetermined point in the movement of the carriage away from the platen, and caused to release the tape, at a predetermined point in its movement toward the platen.

The tape-severing mechanism forming part of my tag-forming attachment may include a pivoted blade, that is normally out of the path of the tape fed over the platen, together with means for moving the blade across the path of the tape to sever the end thereof, actuated by the rocking of the type-carrying head of the marking machine away from the platen. It may also include means for returning the cutting blade to its normal position, automatically rendered effective at a predetermined point in the return stroke of the marking machine head. The means for rocking the blade to sever the end of the tape may take the form of connections between the head of the marking machine and a pivoted drive plate, having a pin and slot connection with the blade, which connections are effective at the beginning of the return stroke of the head. It may also include automatic means for disabling these connections, at a predetermined point in the return stroke of the head. Manually-operable means for rendering these connections ineffective may also be provided.

Referring to the numbered parts of the accompanying drawings, I have shown my tag-forming attachment in connection with a marking machine, indicated generally at 10, having a frame 11 and a rocking head 12, pivoted at 13 and carrying a plurality of type wheels, indicated generally at 14. The marking machine includes a platen 15, supported by frame 11. Means (not shown) are provided for rocking the head 12, so as to carry the type wheels 14 toward and away from platen 15. The type wheels 14 having been adjusted, in any desirable manner, to present type at the printing line to print the characters of the mark, the head 12 is rocked and the type wheels descend to press the selected type against material supported on the platen 15 and print the mark thereon. The head then rocks to carry the type wheels away from the platen to normal position.

A plate 16, secured to the frame 11, has a slot 17 therein, at the level of the top of the platen 15, and the tape, from which the tag is to be formed and to which the mark is to be applied, is fed through this slot 17 onto the platen 15. A horizontal bar 19, having a longitudinally-extending slot 20, has a vertical flange 21 applied to the outer face of a spacing plate 18, which is applied to the outer face of plate 16, and flange 21, plate 18 and plate 16 are secured to the marking machine frame in any suitable manner. The base 22 of a U-shaped member, having the legs 21, is also applied to the outer face of plate 18 and secured, in any suitable manner, to the frame of the marking machine. The legs 21 extend generally parallel to the bar 19 but are located somewhat below it. The outer end of bar 19 is supported by a U-shaped bracket 23, the

legs of which are secured to the outer ends of legs 21, by a bolt 24. Two strips 25, extending parallel to slot 20, are disposed on the upper face of bar 19 adjacent the edges thereof. These strips 25 are considerably narrower than the portions of the bar 19 on each side of the slot 20. A pair of parallel top plates 26 is secured in position over the strips 25, being so spaced apart as to leave between them a slot 27, parallel to and of substantially the same width as slot 20. These parts are secured together by bolts 28 to form a guideway for directing the tape to and through the slot 17 and thence over the platen 15, and this guideway comprises a longitudinally extending slot and a pair of lateral channels opening into said slot from opposite sides for receiving the edge portions of the tape T.

L-shaped brackets 30 have their horizontal arms 29 secured to the legs of the U-shaped bracket 23, as shown in Figs. 5 and 9. A lower roller 32 is mounted on a shaft 31, the ends of which extend through the elongated slots 33 in the brackets 30. An upper roller 35 is mounted on a shaft 34, the ends of which also extend through the slots 33. The tape T passes between the rolls 32 and 35 and thence to the guideway, which directs it toward the platen, and these rolls 32 and 35 constitute tension rolls putting a slight tension on the tape, as it is fed to the platen. A yoke 36 is pivotally mounted on the projecting ends of the shaft 34 and has cam surfaces 37 (Fig. 9) adapted to engage the projecting ends of the shaft 31. It also has notches 38 adapted to engage the projecting ends of said shaft 31, when the yoke 36 is rocked on shaft 34 to move the rolls away from each other. Springs 39, one at each side of the yoke 36, have their upper ends connected to the projecting ends of shaft 34 and their lower ends connected to pins 40 carried by the brackets 30. A key tip or handle 41 is secured to the yoke 36, for convenience in rocking it about its pivotal mounting. When the operator presses down on the key 41, yoke 36 will be rocked counterclockwise (Fig. 9) about the axis of shaft 34, and the cam surfaces 37 engaging the shaft 31, which abuts the lower ends of the slots 33, causes the shaft 34 to be forced upwardly in said slots against the tension of springs 39, thus separating the rolls 32 and 35 to remove the tension on the tape. Engagement of the ends of the shaft 31 in the notches 38 retains the yoke 36 in this position, in which the rolls are separated.

The roll of tape T is mounted on a spindle 42 carried by the lower end of a strap 43, the upper end of which is fastened to one of the legs 21 of the U-shaped bracket 22. Plates 44 and 45 are mounted on the spindle 42, on opposite sides of the reel of tape and in spaced relation, and angular brackets 46 are secured to the periphery of plate 45 and extend laterally toward the edge of plate 44.

Brackets 47 are mounted on the guideway, at opposite ends thereof, by means of bolts 28, and each of these brackets has a notch 48 at the upper end thereof, which receive the ends of a stop rail 49, secured thereto in any suitable manner. This stop rail is provided with a plurality of sockets 50 and with a transverse stop pin 51, which projects laterally from the stop rail. Stop block 52, having an upwardly-opening notch 53 therein, is slidably mounted on the stop rail 49 and this block has a laterally-extending boss 54, the interior of which is hollowed out to form a recess 55. A plunger 56 is slidably mounted in

said boss and the tip thereof is adapted to project into any one of the sockets 50 in the stop rail. A flange 57 on the plunger 56 is slidable in the recess 55 and spring 58 is compressed between flange 57 and sleeve 59, which closes the outer end of recess 55. A milled head 60 is fixed to the outer end of plunger 56, by means of which it may be withdrawn against the pressure of spring 58, so as to withdraw the projecting end from the socket 50 and permit adjustment of block 52 on the stop rail 49 to a new position. An indexing strip 61 is fastened to the upper surface of the stop rail 49 and has a plurality of characters thereon, indicating different lengths of tape feed. Indexing marks 62 formed on the top of the stop block 52, when opposite one of these characters on strip 61, indicate that the block is in line with that one of the sockets 50 that will give a tape feed of corresponding length.

A tape-feeding carriage is provided, which comprises a base 63 extending beneath the guideway and having upwardly-extending portions 64 at the sides thereof, which extend along the sides of the guideway. The carriage includes, also, a top plate 65, which is secured to the base 63 by bolts 66 extending through the top plate 65 and the portions 64 of said base. A clamping member 67, the upper portion of which is preferably milled or roughened, is secured to the base 63 of the carriage by the screw 68, and extends into the slot 20, the upper surface of the member 67 being about on a line with the lower walls of the lateral channels formed in the guideway, and hence below the path of the tape. The top plate 65 of the carriage is provided with a boss 69, in which a plunger 70 is slidably mounted. This plunger has a head 71, which is disposed in the slot 27 of the guideway, and the lower surface of this head is milled or roughened. A spring 72 surrounds the plunger 70 and is interposed between the top of the boss 69 and a transverse pin 73, carried by the upper end of the plunger. This spring tends to move the plunger 70 upwardly in the boss, so as to carry the head 71 away from the tape. The upper end of the plunger is provided with a point 74 and cam surfaces 75 on each side thereof. Legs 76 of a yoke member are pivoted to the carriage at 77, and the cross-member 78 of this yoke is adapted to engage the cam surface 75 and the tip 74, when the yoke is rocked clockwise, to depress the plunger 70 against the pressure of spring 72 and force the head 71 against the tape to clamp it against the clamping member 67. As shown in Fig. 5, the pressure exerted by the spring 72 through the tip of plunger 70 upon the cross-member 78 of the yoke is so directed as to hold the yoke in the position shown, in which it holds the plunger depressed to clamp the tape. The base 79 of a trip is fastened to cross-member 78 of the yoke and the trip has a pair of upwardly-extending arms 80, which extend on opposite sides of the stop rail 49, between the trip pin 51 and the stop block 52. When the carriage is moved from the position shown in full lines in Fig. 5, to that indicated by dotted lines, an arm 80 of the trip is engaged by the projecting end of the trip pin 51 and the trip and yoke 76 are rocked counterclockwise, thus freeing the upper end of plunger 70 and permitting spring 72 to move it upwardly to free the tape. The yoke then assumes the position shown in dotted lines in Fig. 5. When the carriage is moved in the opposite direction, the arms 80 engage the stop block 52 and the yoke 76 is rocked clockwise, causing the cross-member 78 thereof to engage the upper end of the plunger 70

and force it downwardly to clamp the tape against the member 67, and the device locks itself in that position. A stop member 81 is fastened to the carriage by means of the bolt 81', and the upper end of this stop 81 extends in position to engage the cross-member 78 of yoke 76, when the yoke is rocked to the tape-clamping position shown in Fig. 5. This prevents further rocking movement of yoke 76 in that direction and the stop block 52, yoke 76 and stop 81 constitute means for limiting the movement of the carriage away from the platen. Obviously, the point at which the carriage will be stopped, in its movement away from the platen, may be varied by varying the position of stop block 52. Movement of the yoke 76, in the other direction, is limited by engagement of the edges 82 with the top of plate 65 of the carriage.

The headed screws 83, having shoulder portions 84, are secured to and project from the sides of the carriage, and the shoulder portions 84 of these screws are located in the elongated slots 85 of arms 86, one at each side of the carriage, which are fast on a transverse shaft 87 journaled in the legs 21 of the U-shaped bracket 22. An arm 88, also fast on the shaft 87, has connected thereto one end of a spring 89, the other end of which spring is connected to a bracket 90 secured to the frame 11 of the marking machine. An operating arm 91, also fast on the shaft 87, has a U-shaped bracket 92 pivoted thereto at 93, and the legs of the bracket 92 have elongated openings 94 therein, through which the pitman 95 extends. The upper end of pitman 95 is pivotally connected, at 96, to a bracket 97 fastened to the head 12 of the marking machine. A nut or other suitable abutment 98 is mounted on the pitman 95. When head 12 is rocked to carry the type wheels 14 toward the platen 15, pitman 95 descends and abutment 98 engages member 92 and rocks shaft 87 clockwise in oppositiion to spring 89, so as to move the carriage toward the platen. As permitted by the ascent of pitman 95 during the return stroke of the head, spring 89 moves the carriage away from the platen.

As shown in Fig. 5, the guide plate 16, having the slot 17 therein, is mounted on the frame 11 of the marking machine adjacent one end of platen 15, with the slot 17 on a level with the top of the platen. This plate 16 (Fig. 4) has a lateral ear 99, to which a blade-supporting arm 100 is pivotally connected at 101. This arm extends upwardly, then rearwardly and, then, downwardly, being arched over the upper end of guide plate 16. A blade 102 is secured to arm 100 and, as shown in Fig. 5, bears against the side of guide plate 16 adjacent platen 15. In the normal position of arm 100, blade 102 occupies the position shown in Fig. 4, extending at an angle to the length of slot 17 and being above it so that the tape is free to pass through said slot to the platen. An arm 103, provided with an elongated slot 105, is fastened to the end of arm 100 by the rivets 104. A disc-like drive plate 106 is pivotally mounted on the stud 107, which is carried by a bracket 108 secured to the marking machine frame 11. This drive plate 106 has a stud 109, which works in the slot 105 of arm 103. An arm 110, secured to the drive plate 106 by rivets 111, has the upper end of spring 112 connected thereto, the lower end of said spring being anchored to a stud 113 on the marking machine frame. Spring 112 tends to rock the drive plate 106 counterclockwise about stud 107 and it will be seen that, due to the pin and slot connection between drive plate 106 and arm 100,

spring 112 tends to rock arm 100 and blade 102 to the normal position, shown in Fig. 4.

A stud 114 is mounted eccentrically on drive plate 106. A link 115 is pivotally connected at 116 to the head 12 of the marking machine, and depends therefrom alongside the stud 114 on the drive plate. This link is provided with a notch 117, which is so located that, when the head 12 is in the lower position in which the type wheels 14 engage material on the platen 15, notch 117 will be in position to hook under the stud 114 on drive plate 106. A spring 118 fastened, at one end, to the lower end of link 115 and, at 119, to a part of the marking machine frame, tends to draw link 115 toward stud 114, so as to cause it to hook under said stud when head 12 reaches the bottom of its stroke. A stud 106' on drive plate 106 is adapted to engage bracket 108 to limit counterclockwise movement of said drive plate. A lug 120 is adjustably mounted on drive plate 106, by means of a screw 122 passing through a notch 121 in the base of the lug, and this lug is so located that, as drive plate 106 rocks clockwise in opposition to spring 112, it will engage the lower end of link 115 and crowd it laterally so as to unhook it from the stud 114. A link 123 is pivotally connected, at 124, to the lower end of link 115, and said link extends through a loop 125, carried by a suitable portion of the framework, and has a key tip 126 at its forward end. Pushing rearwardly on the link 123 will hold the link 115 in ineffective position against the pressure of spring 118, thus disabling the tape-severing mechanism.

The frame 11 of the marking machine, adjacent the platen 15, is provided with a pair of spaced brackets 127, in which the portion 128 of a flipper member is journaled. This member extends laterally at 129, past the end of the platen, and thence extends, at 130, parallel to the portion 128 but on the opposite side of the platen. A torsion spring 131 surrounds the portion 128 of the flipper between the brackets 127, one end of said spring being fastened to one of the brackets, while the other end is fastened to a nut 132 secured to the portion 128 of the flipper. The head 12 of the marking machine has a spring arm 133 secured thereto, which has a tooth 134 adapted to snap under and engage under the portion 129 of the flipper at the end of the downstroke of the head. As the head moves upwardly on the return stroke, the tooth 134 rocks the flipper against the tension of spring 131, until tooth 134 clears the portion 129 of the flipper, when spring 131 returns it to normal position. This serves to flip from the platen, the tag that has just been formed by severing the projecting portion of the tape.

The operation of this tag-forming mechanism should be apparent from the description given above, but it will be described briefly, as follows: The tape T passes from the roll of tape on spindle 42 upwardly and between the tension rolls 32 and 35, thence into the channel of the guideway, and thence through the slot 17 in guide plate 16. As shown in full lines in Fig. 5, the tape T passes over the clamping member 67 and is clamped thereto by the head 71 of plunger 70, which is held in depressed position by the cross-member 78 of yoke 76. As the marking machine is operated and the head 12 rocked to carry the type wheels 14 toward platen 15, pitman 95 descends and abutment 98 thereon engages member 92 carried by the operating arm 91 and rocks the shaft 87 clockwise, against the tension of spring 89.

This rocks arms 86 clockwise, and thereby the carriage, including base 63 and top plate 65, is moved from the position shown in full lines in Fig. 5 toward the platen to the position indicated in dotted lines, in that view. Since the tape is clamped to the carriage, this moves the tape in the channel of the guideway and through the slot 17, so that a portion of the tape projects over platen 15. As the head nears the end of its downstroke, arm 80 of the trip member 79 engages the projecting end of the trip pin 51 on stop rail 49, and thereby yoke 76 is caused to rock counterclockwise to the position indicated in dotted lines. This frees the plunger 70, permitting it to rise under the pressure of spring 72 so as to free the tape, and the feeding of the tape ceases at that point. Shortly thereafter, the type wheels 14 engage the projecting portion of the tape on platen 15 and imprint the mark thereon. As the head 12 moves upwardly on the return stroke, abutment 98 moves away from member 92 and thereby spring 89 is effective to rock shaft 87 counterclockwise and move the carriage away from the platen. When, in such movement, arms 80 engage the stop block 52, yoke 76 will be rocked from the dotted line position clockwise to the position shown in full lines in Fig. 5, which depresses plunger 70 to clamp the tape against the clamping member 67. Engagement of the cross-member 78 of the yoke with the stop 81 prevents further movement of the carriage away from the platen. As the carriage moves away from the platen, plunger 70 is in its elevated position away from the tape, so that the carriage moves relative to the tape, but, at the end of the movement of the carriage away from the platen, the plunger 70 is automatically applied to grip the tape as stated above. At the next stroke of the marking machine head, the feeding of the tape will be repeated as described above. The amount of tape to be fed, at each stroke of the marking machine head, can be varied by adjusting the position of the stop block 52 along the rail 49. This is done by withdrawing the plunger 56 from a socket 50, sliding the block along the rail, and allowing the plunger 56 to be engaged by spring 58 in another one of the sockets 50.

When the head 12 of the marking machine is in normal position, spring 118 (Fig. 4) holds the lower portion of link 115 against the side of stud 114 and spring 112 holds the drive plate 106 and the blade-carrying arm 100 in the positions shown in Fig. 4. When the head 12 reaches the end of its downstroke, spring 118 moves the lower end of link 115 laterally, causing the notch 117 to engage under the stud 114. This automatically establishes the driving connection between the marking machine head and the drive plate. As the head moves upwardly on the return stroke, the engagement of link 115 with stud 114 causes the drive plate 106 to be rocked clockwise against the tension of spring 112, and this causes the blade-carrying arm 100 to be rocked counterclockwise, carrying the blade 102 across the path of the tape extending through slot 17 so that it severs the portion that has been fed over the platen during the downstroke of the marking machine head. As drive plate 106 rocks clockwise, lug 120 is carried against the lower end of link 115 and crowds it laterally, so as to unhook it from the stud 114, and thereupon spring 112 is at once effective to rock the drive plate 106 counterclockwise, and the blade-carrying arm 100 clockwise, to restore these parts to their

normal positions. If it is desired to disable the tape-severing mechanism, this may be accomplished by pressing rearwardly on the key tip 126, which moves the link 123 rearwardly, thus moving the lower end of link 115 to the rear against the tension of spring 118, and preventing engagement of notch 117 with stud 114 at the end of the downstroke of the marking machine head.

I am aware that the mechanism shown herein may be varied considerably without departing from the spirit of my invention and, therefore, I claim my invention broadly as indicated by the appended claims.

Having thus described my invention, what I claim as new and useful and desire to secure by Letters Patent it:

1. A tag-forming attachment for a marking machine of the class having a platen, a type-carrying head rockable toward the platen and away therefrom a tape supply source, and means for rocking said head, comprising the combination of means for gripping the tape, means actuated by the rocking of said head for moving the gripping means away from the tape supply source toward the platen and then from the platen toward the supply source, means for releasing said gripping means at a predetermined point in its movement toward the platen, means for causing said gripping means to regrip the tape at a predetermined point nearer the tape supply source in its movement away from the platen, and means actuated by the rocking of said head away from the platen for severing the portion of the tape fed over the platen by the movement of said gripping means toward the platen.

2. A tag-forming attachment for a marking machine of the class having a platen, type-carrying head, rockable toward and away from the platen and means for rocking said head, comprising the combination of a guideway for guiding tape to and over the platen, a carriage movable on said guideway toward and from said platen, means actuated by the rocking of said head for moving said carriage toward and from the platen, a clamping member carried by said carriage and adapted to be applied to the tape to clamp it to the carriage, means actuated at a predetermined point in the movement of the carriage away from the platen for applying said clamping member to clamp the tape, means actuated at a predetermined point in the movement of the carriage toward the platen to release the clamping member to free the tape, and means actuated by the rocking of said head away from the platen for severing the portion of the tape fed over the platen by the movement of said clamping carriage toward it.

3. A tag-forming attachment for a marking machine of the class having a platen, a rocking type-carrying head, and means for rocking said head, comprising the combination of means actuated by the rocking of said head toward the platen for feeding tape over the platen, a pivoted blade normally out of the path of the tape and past which said tape is fed to the platen, a pivoted drive plate having a pin and slot connection with said blade, spring means acting on said drive plate tending to rock the same in a direction to remove said blade from the path of said tape, and connections between said head and said drive plate effective at the beginning of the return stroke of said head for rocking said drive plate in the opposite direction to cause said blade to sever the portion of the tape projecting over the platen.

4. A tag-forming attachment for a marking machine of the class having a platen, a rocking type-carrying head, and means for rocking said head, comprising the combination of means actuated by the rocking of said head toward the platen for feeding tape over the platen, a pivoted blade normally out of the path of the tape and past which said tape is fed to the platen, a pivoted drive plate having a pin and slot connection with said blade, spring means acting on said drive plate tending to rock the same in a direction to remove said blade from the path of said tape, connections between said head and said drive plate automatically effective at the beginning of the return stroke of said head for rocking said drive plate in the opposite direction to cause said blade to sever the portion of the tape projecting over said platen, and manually operable means for rendering said connections ineffective.

5. A tag-forming attachment for a marking machine of the class having a platen, a rocking type-carrying head, and means for rocking said head, comprising the combination of means actuated by the rocking of said head toward the platen for feeding tape over the platen, a pivoted blade normally out of the path of the tape and past which said tape is fed to the platen, a pivoted drive plate having a pin and slot connection with said blade, spring means acting on said drive plate tending to rock the same in a direction to remove said blade from the path of said tape, connections between said head and said drive plate automatically effective at the beginning of the return stroke of said head for rocking said drive plate in the opposite direction to cause said blade to sever the portion of the tape projecting over said platen, and means effective at a predetermined point in the return stroke of the head to disable said connections and permit the spring means to return the blade to normal position.

6. A tape-feeding attachment for a marking machine of the class having a platen, a type-carrying head rockable toward and away from the platen, a tape source, and means for rocking said head, comprising the combination of tape-gripping means movable toward and from the platen, means actuated by the rocking of said head toward said platen for moving the tape-gripping means toward the platen, and means effective during the return stroke of said head away from the platen for moving the tape-gripping means away from the platen, said tape gripping means gripping the tape as it moves toward the platen and being released from the tape as it moves away from the platen.

7. A tape-feeding attachment for a marking machine of the class having a platen, a rocking type-carrying head, a tape source, and means for rocking said head, comprising the combination of tape-gripping means movable toward and from the platen, means actuated by the rocking of said head toward said platen for moving the tape-gripping means, as it grips the tape, toward the platen, means effective at a predetermined point in the movement of the tape-gripping means toward the platen to cause said tape-gripping means to release the tape, and means effective during the return stroke of said head for moving the tape-gripping means away from the platen.

8. A tape-feeding attachment for a marking machine of the class having a platen, a rocking type-carrying head, a tape supply source, and means for rocking said head, comprising the com-

bination of tape-gripping means movable toward and from the platen, means actuated by the rocking of said head toward said platen for moving the tape-gripping means toward the platen, means effective at a predetermined point in the movement of the tape-gripping means toward the platen to cause said tape-gripping means to release the tape, means effective during the return stroke of said head for moving the tape-gripping means away from the platen and toward the tape supply source, and means automatically effective at a predetermined point in said movement of said tape-gripping means away from the platen for causing it to grip the tape.

9. A tape-feeding device comprising the combination of a guideway for guiding tape, a carriage reciprocable on said guideway and having a clamping portion disposed beneath the path of the tape, a plunger slidably mounted in the carriage above the path of the tape and adapted when depressed to clamp the tape against said clamping portion, spring means tending to move said plunger upwardly away from the tape to release it, means for depressing said plunger and holding it depressed against the action of said spring means, means for reciprocating said carriage on the guideway, and means operable at a point in the reciprocation of the carriage to release the plunger.

10. A tape-feeding device comprising the combination of a guideway for guiding tape, a carriage reciprocable on said guideway and having a clamping portion disposed beneath the path of the tape, a plunger slidably mounted in said carriage above the path of the tape and adapted when depressed to clamp the tape against said clamping portion, said plunger having a pointed upper end constituting a camming surface, spring means tending to move said plunger away from the path of the tape, a yoke pivoted on said carriage and having a cross member adapted to engage the pointed end of said plunger to depress it, means for reciprocating said carriage on the guideway, and means operable at a point in the reciprocating cycle of the carriage to release the plunger.

11. A tape-feeding device comprising the combination of a guideway for guiding tape, a carriage reciprocable on said guideway and having a clamping portion disposed beneath the path of the tape, a plunger slidably mounted in said carriage above the path of the tape and adapted when depressed to clamp the tape against said clamping portion, said plunger having a pointed upper end constituting a camming surface, spring means tending to move said plunger away from the path of the tape, a yoke pivoted on said carriage and having a cross member adapted to engage the pointed end of said plunger to depress it, a stop fixed to the carriage in position to be engaged by the yoke when the cross member thereof engages and depresses said plunger, and means for reciprocating said carriage on the guideway.

12. A tape-feeding device comprising the combination of a guideway for guiding tape, a stop rail extending parallel to said guideway, a trip pin carried by said rail, a stop carried by said rail, a carriage reciprocably mounted on said guideway and having a clamping portion disposed beneath the path of the tape, a clamping plunger slidably mounted in the carriage and adapted when depressed to clamp the tape against the clamping portion, spring means tending to move said plunger away from the path of the tape, a yoke pivoted on the carriage and having a cross member adapted to engage the upper end of said plunger to depress it, when the yoke is rocked in one direction, said yoke having an arm extending upwardly alongside said rail between said trip pin and said stop in position to be engaged thereby and release the plunger at the limits of movement of the carriage, and means for reciprocating said carriage.

13. A tape-feeding device comprising the combination of a guideway for guiding tape, a stop rail extending parallel to said guideway, a trip pin carried by said rail, a stop adjustably mounted on said rail, a carriage reciprocably mounted on said guideway and having a clamping portion disposed beneath the path of the tape, a clamping plunger slidably mounted in the carriage and adapted when depressed to clamp the tape against said clamping portion, spring means tending to move said plunger away from the path of the tape, a yoke pivoted on the carriage and having a cross member adapted to engage the upper end of said plunger to depress it, when the yoke is rocked in one direction, said yoke having an arm extending upwardly alongside said rail between said trip pin and said stop in position to be engaged thereby at the limits of movement of the carriage to release the plunger, and means for reciprocating said carriage.

14. A tape-feeding attachment for a marking machine of the class having a platen, a rocking type-carrying head, a tape supply source, and means for rocking said head, comprising the combination of a guideway for directing the tape to the platen, a carriage reciprocable on said guideway toward and from the platen, means actuated by the rocking of the head toward the platen for moving the carriage toward the platen, spring means for moving the carriage away from the platen, tape-clamping means carried by said carriage, means for automatically applying said tape-clamping means to grip the tape at a predetermined point in the movement of the carriage away from the platen and toward the tape supply source, and means for automatically releasing said tape-clamping means from the tape at a predetermined point in the movement of the carriage toward the platen.

15. A tape-feeding attachment for a marking machine of the class having a platen, a rocking type-carrying head, and means for rocking said head, comprising the combination of a guideway for directing the tape to the platen, a carriage reciprocable on said guideway toward and from the platen, means actuated by the rocking of the head toward the platen for moving the carriage toward the platen, spring means for moving the carriage away from the platen, tape-clamping means carried by said carriage, means effective at a predetermined point for automatically limiting movement of the carriage away from the platen and applying said tape-clamping means at said point, and means for automatically releasing said tape-clamping means at a predetermined point in the movement of the carriage toward the platen.

16. A tape-feeding attachment for a marking machine of the class having a platen, a rocking type-carrying head, and means for rocking said head, comprising the combination of a guideway for directing the tape to the platen, a carriage reciprocable on said guideway toward and from the platen, a pitman pivotally connected to said head, a transverse rock shaft, an arm fixed thereon and having a pin and slot connection with

said carriage, an operating arm fixed on said shaft, a member pivoted to said operating arm and having an opening through which said pitman extends, an abutment on said pitman adapted to engage said member as the pitman descends to rock said shaft and move said carriage toward the platen, spring means acting on said shaft to move said carriage away from the platen, and tape-clamping means carried by said carriage.

17. A tape-feeding device comprising the combination of a guideway for guiding the tape, said guideway having a longitudinally-extending slot and a pair of lateral channels receiving the edge portions of the tape and opening into said slot from opposite sides thereof, a clamping carriage reciprocable on said guideway, a clamping member secured to said carriage and disposed in said slot below the path of the tape, a plunger slidably mounted in said carriage and having a clamping head disposed in said slot above the path of the tape and opposite said clamping member, means operated at a predetermined point in the movement of said carriage to force said plunger toward the path of the tape to grip it against said clamping member, means operative at a predetermined point in the movement of said carriage for moving said plunger away from the path of said tape to release it, and means for reciprocating said carriage on said guideway.

18. A tape-severing attachment for a marking machine of the class having a platen, a type-carrying head, rockable toward and away from the platen and means for rocking said head, comprising the combination of a pivoted blade having a cutting portion normally disposed to one side of the plane including a length of tape on the platen, means automatically effective during the movement of the head away from the platen for rocking said blade to carry the cutting portion thereof across said plane and sever the portion of the tape on the platen, and means automatically effective at a predetermined point in the movement of said head away from the platen for returning said blade to normal position.

19. A tape-severing attachment for a marking machine of the class having a platen, a type-carrying head rockable toward and away from the platen, and means for rocking said head, comprising the combination of a pivoted blade having a cutting portion normally disposed to one side of the plane including a length of tape on the platen, blade-actuating connections with said head, automatically rendered effective at the completion of the movement of said head toward the platen, for rocking said blade across said plane to sever said tape during the first part of the return stroke of said head, means automatically disabling said connections at a predetermined point in said return stroke, and spring means for returning said blade to normal position.

20. A tape-severing attachment for a marking machine of the class having a platen, a type-carrying head rockable toward and away from the platen, and means for rocking said head, comprising the combination of a pivoted blade having a cutting portion normally disposed to one side of the plane including a length of tape on the platen, a pivoted drive plate having a pin and slot connection with said blade, means, effective during the movement of said head away from the platen, for rocking said drive plate in one direction, and spring means for rocking said drive plate in the opposite direction.

21. A tape-severing attachment for a marking machine of the class having a platen, a type-carrying head, rockable toward and away from the platen, and means for rocking said head, comprising the combination of a pivoted blade having a cutting portion normally disposed to one side of the plane including a length of tape on the platen, a pivoted drive plate having a pin and slot connection with said blade, a stud eccentrically mounted on said drive plate, a link pivotally connected with said head and having a notch so located as to hook under said stud at the end of the movement of said head toward the platen, spring means tending to hold said link in engagement with said stud, means for disengaging the notch in said link from said stud, and spring means for returning the drive plate to normal position.

22. A tape-severing attachment for a marking machine of the class having a platen, a type-carrying head rockable toward and away from the platen, and means for rocking said head, comprising the combination of a pivoted blade having a cutting portion normally disposed to one side of the plane including a length of tape on the platen, a pivoted drive plate having a pin and slot connection with said blade, a stud eccentrically mounted on said drive plate, a link pivotally connected to said head and having a notch so located as to hook under said stud at the end of the movement of said head toward the platen, spring means tending to hold said link in engagement with said stud, a lug carried by said drive plate and so located as to engage said link and unhook it from said stud as the drive plate is rocked from normal position by the return stroke of said head, and spring means for returning the drive plate to normal position.

23. A tape-severing attachment for a marking machine of the class having a platen, a type-carrying head rockable toward and away from the platen, and means for rocking said head, comprising the combination of a pivoted blade having a cutting portion normally disposed to one side of the plane including a length of tape on the platen, a pivoted drive plate having a pin and slot connection with said blade, a stud eccentrically mounted on said drive plate, a link pivotally connected with said head and having a notch so located as to hook under said stud at the end of the movement of said head toward the platen, spring means tending to hold said link in engagement with said stud, means for disengaging the notch in said link from said stud, spring means for returning the drive plate to normal position, and manually operable means for holding said link out of hooking engagement with said stud.

24. A tape-severing attachment for a marking machine of the class having a platen, a type-carrying head rockable toward and away from the platen, and means for rocking said head, comprising the combination of a guide plate having a slot through which tape is fed to and over said platen, an arm pivotally mounted on said plate and arching over the tape extending through said slot, a cutting blade fast to said arm and bearing against the side of said plate, spring means normally holding said arm in such position that the major portion of said blade extends at an angle to the length of said slot above the same, and means automatically effective upon

the movement of said head away from the platen for rocking said arm to cause said blade to sever the tape projecting through said slot.

RAYMOND OSBORNE.

REFERENCES CITED

The following references are of record in the file of this patent:

UNITED STATES PATENTS

Number	Name	Date
859,320	Myers	July 9, 1907
1,029,695	Kohnle	June 18, 1912
1,300,726	Henry	Apr. 15, 1919
1,484,136	Kohnle	Feb. 19, 1924
1,526,979	Henry	Feb. 17, 1925
1,667,810	Kohnle	May 1, 1928
1,765,158	Henry	June 17, 1930
1,879,233	Henry	Sept. 27, 1932
1,889,250	Kohnle	Nov. 29, 1932
1,959,922	Maspons	May 22, 1934
2,023,045	Flood	Dec. 3, 1935
2,083,150	Flood	June 8, 1937
2,094,566	Yancey	Sept. 28, 1937
2,096,073	Spencer	Oct. 19, 1937
2,103,654	Weimont	Dec. 28, 1937
2,128,964	Pityo	Sept. 6, 1938
2,250,530	Hafecost	July 29, 1941
2,281,896	Weimont	May 5, 1942

Certificate of Correction

Patent No. 2,515,354 July 18, 1950

RAYMOND OSBORNE

It is hereby certified that error appears in the printed specification of the above numbered patent requiring correction as follows:

Column 6, line 40, for "oppositiion" read *opposition*; column 9, line 17, for the word "it" read *is*; line 21, after "therefrom" insert a comma; line 38, after the word and comma "platen," insert *a*; line 39, after "head" strike out the comma, and insert the same after "platen" in line 40; column 13, line 34, after "head" strike out the comma and insert the same after "platen" in line 35; column 14, line 5, after "head" strike out the comma;

and that the said Letters Patent should be read as corrected above, so that the same may conform to the record of the case in the Patent Office.

Signed and sealed this 24th day of October, A. D. 1950.

[SEAL]

THOMAS F. MURPHY,
Assistant Commissioner of Patents.