United States Patent [19]

Deaton

[11] **3,745,999**

[45] **July 17, 1973**

[54] **MEDICAL SUCTION METHOD AND APPARATUS**

[75] Inventor: **David W. Deaton,** Dallas, Tex.

[73] Assignee: **Deaton Medical Company,** Dallas, Tex.

[22] Filed: **Dec. 8, 1971**

[21] Appl. No.: **206,018**

[52] **U.S. Cl.** **128/277**

[51] **Int. Cl.** **A61m 1/00**

[58] **Field of Search** ..... 128/275–278, DIG. 24

[56] **References Cited**

UNITED STATES PATENTS

3,109,578	11/1963	Davis	128/DIG. 24
3,163,164	12/1964	Waldman, Jr.	128/DIG. 24
3,306,327	2/1967	Ilg	128/DIG. 24
3,357,429	12/1967	Folkman et al.	128/275
3,537,109	11/1970	Spurrier et al.	128/275 X
3,537,456	11/1970	Williams et al.	128/275
3,556,101	1/1971	Economoll	128/277
3,625,216	12/1971	Pannier, Jr. et al.	128/277
3,648,698	3/1972	Doherty	128/276

OTHER PUBLICATIONS

Sorenson Reseach Co. Catalogue PR 717–21–16R

Primary Examiner—Charles F. Rosenbaum
Attorney—D. Carl Richards, Jerry W. Mills et al.

[57] **ABSTRACT**

The specification discloses a medical suction technique including a generally rigid container which supports a flexible drainage bag therein. A pair of conduits extend from the container for connection to a patient area to be drained and for connection to a source of reduced pressure. In operation, fluid is drawn from the area to be drained and collected within the drainage bag. A plurality of apertures are formed through the side walls of the bag in order that the pressure is equalized on both sides of the bag to prevent the bag from becoming closed during suction operation. In the preferred embodiment of the invention, suction is initially applied to the area between the bag and the container, and in other embodiments of the invention suction is initially applied into the interior of the bag.

10 Claims, 15 Drawing Figures

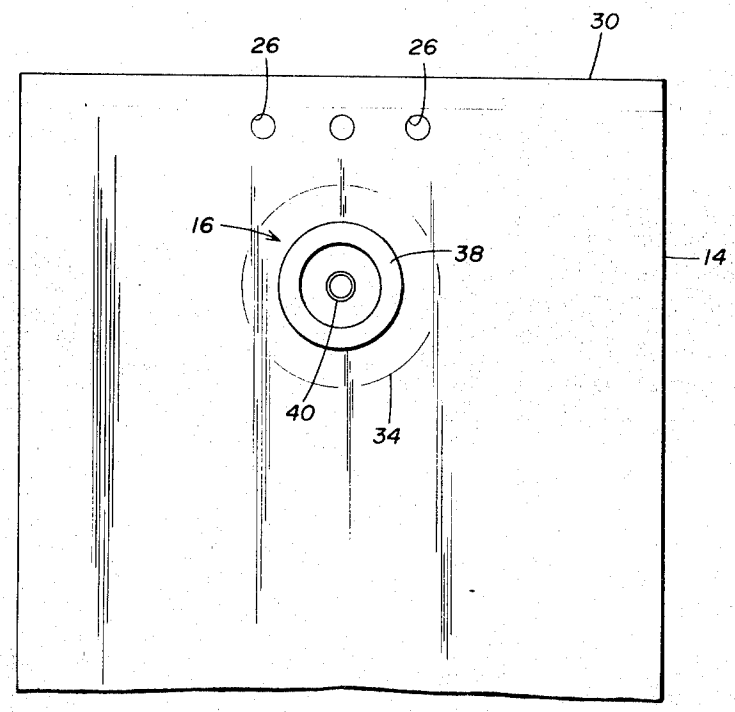

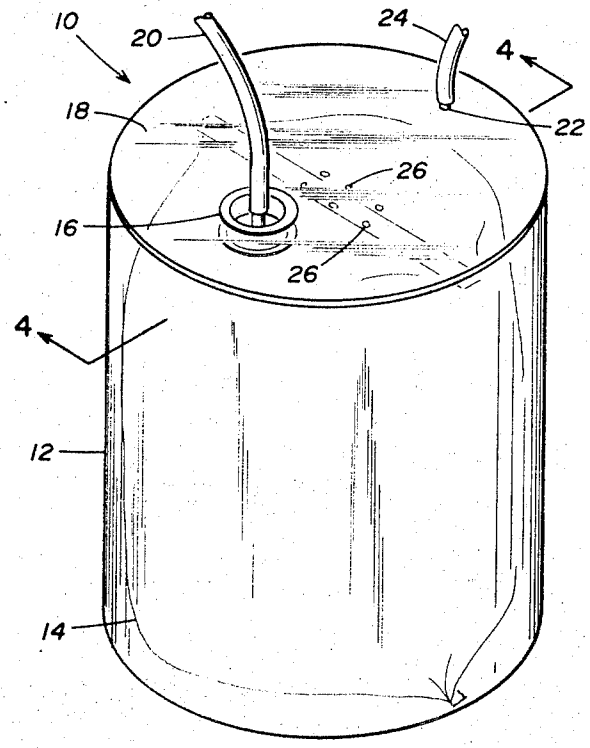

FIG. 1

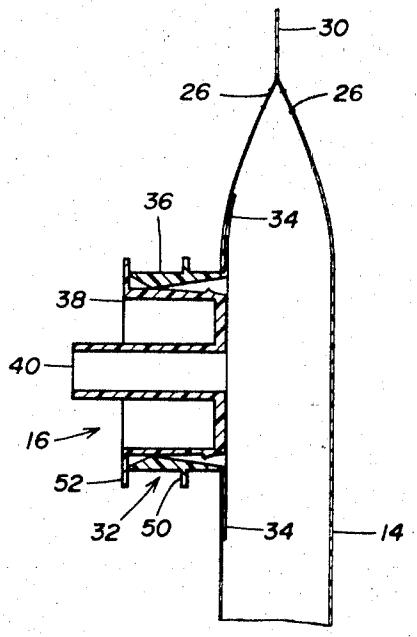

FIG. 2

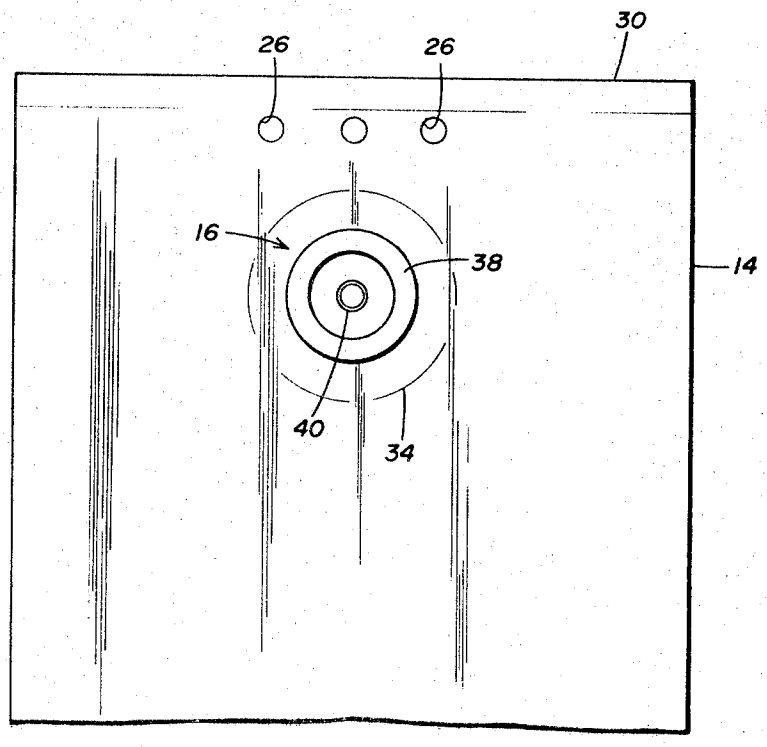

FIG. 3

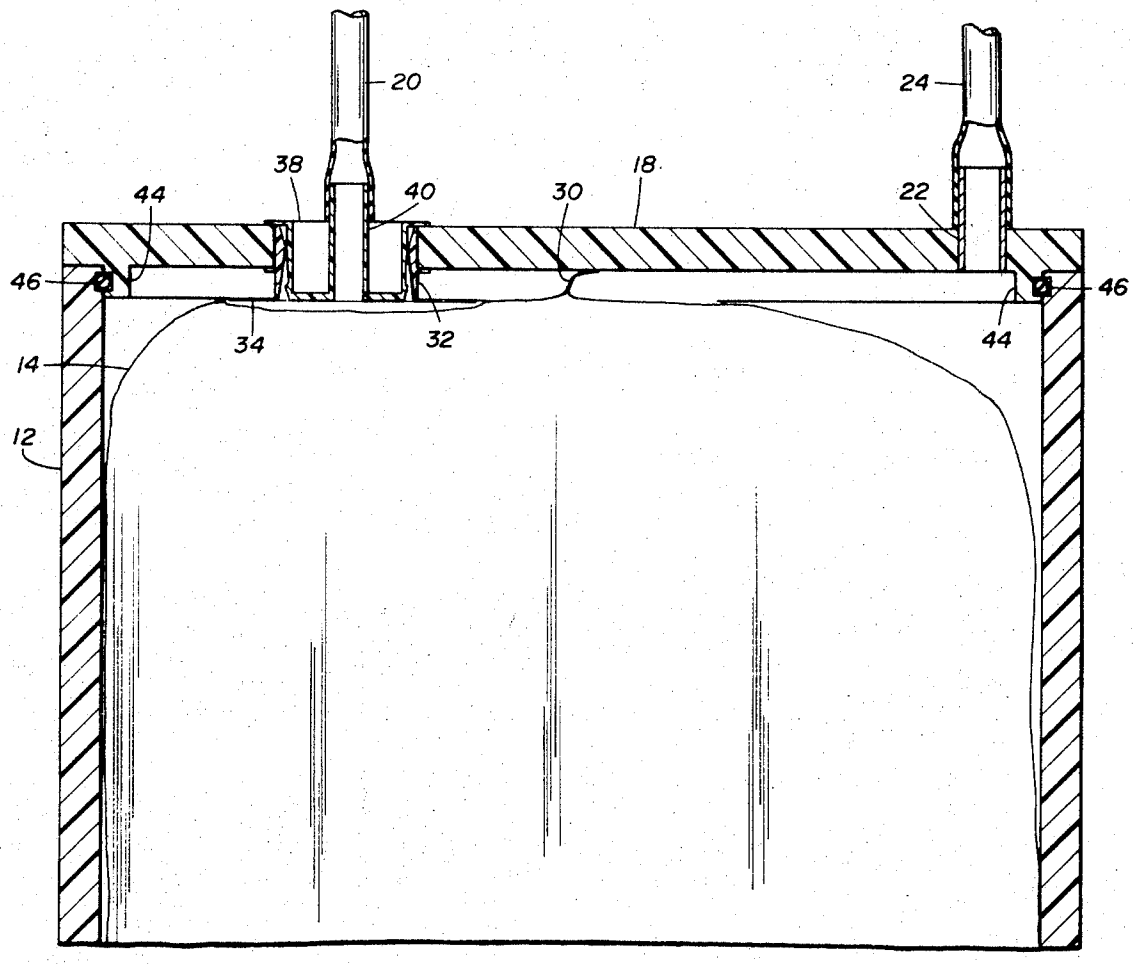

FIG. 4

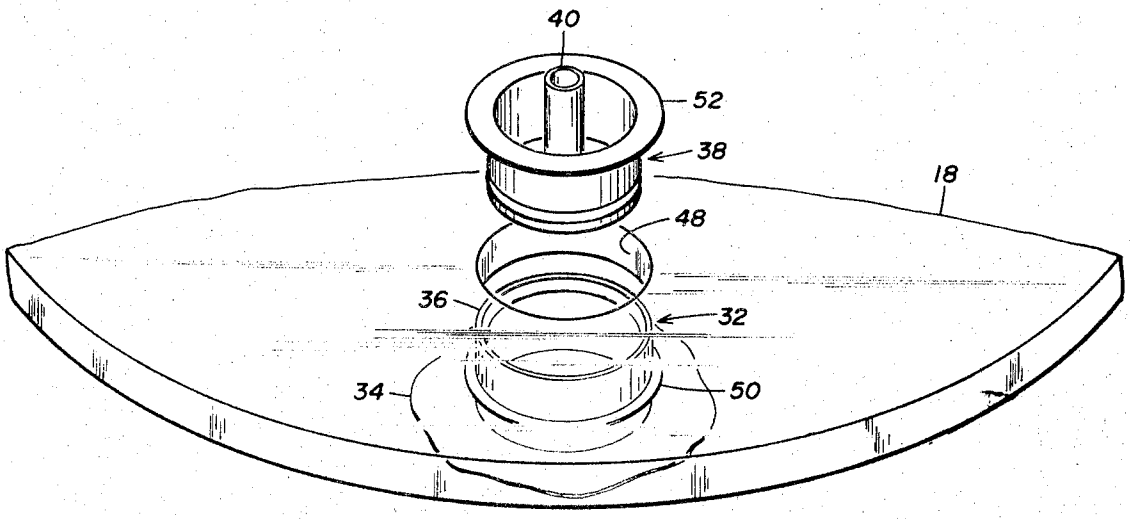

FIG. 5

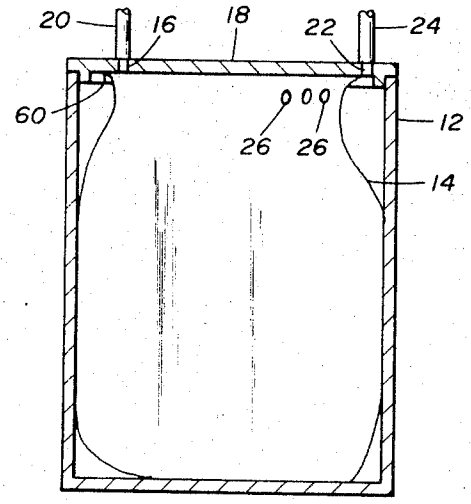

FIG. 6

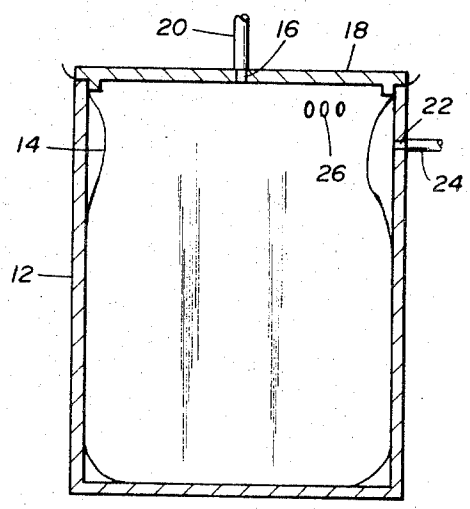

FIG. 7

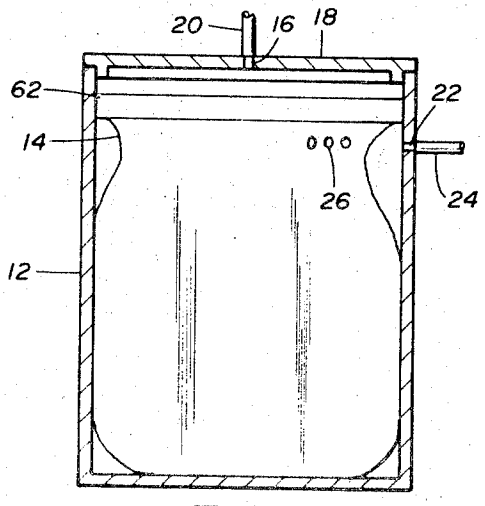

FIG. 8

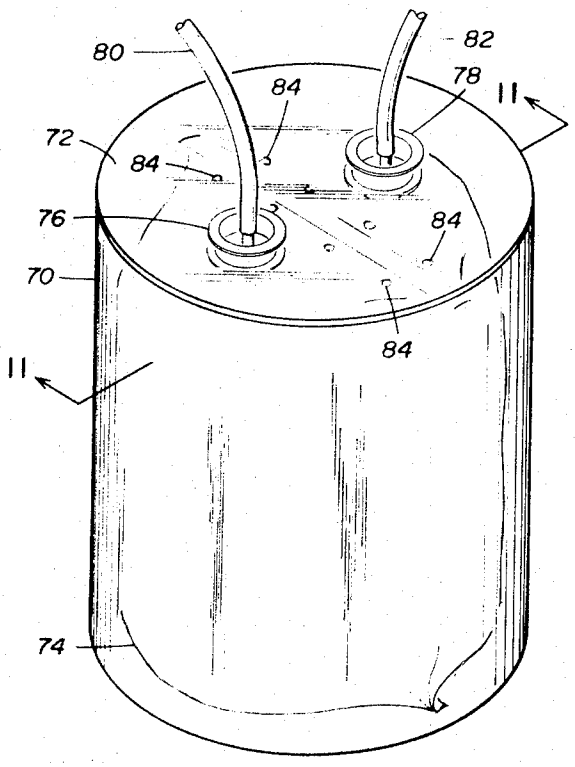

FIG. 9

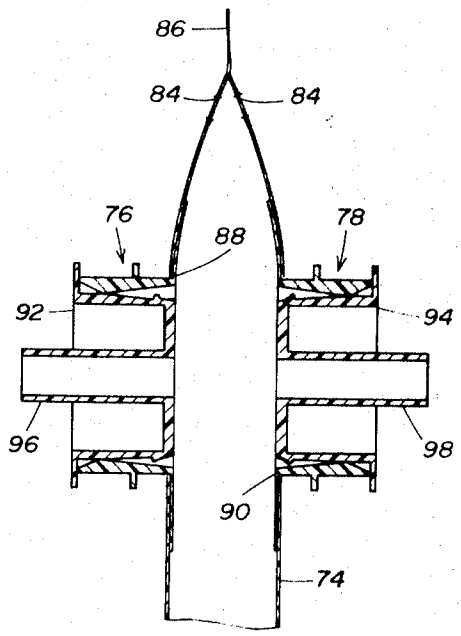

FIG. 10

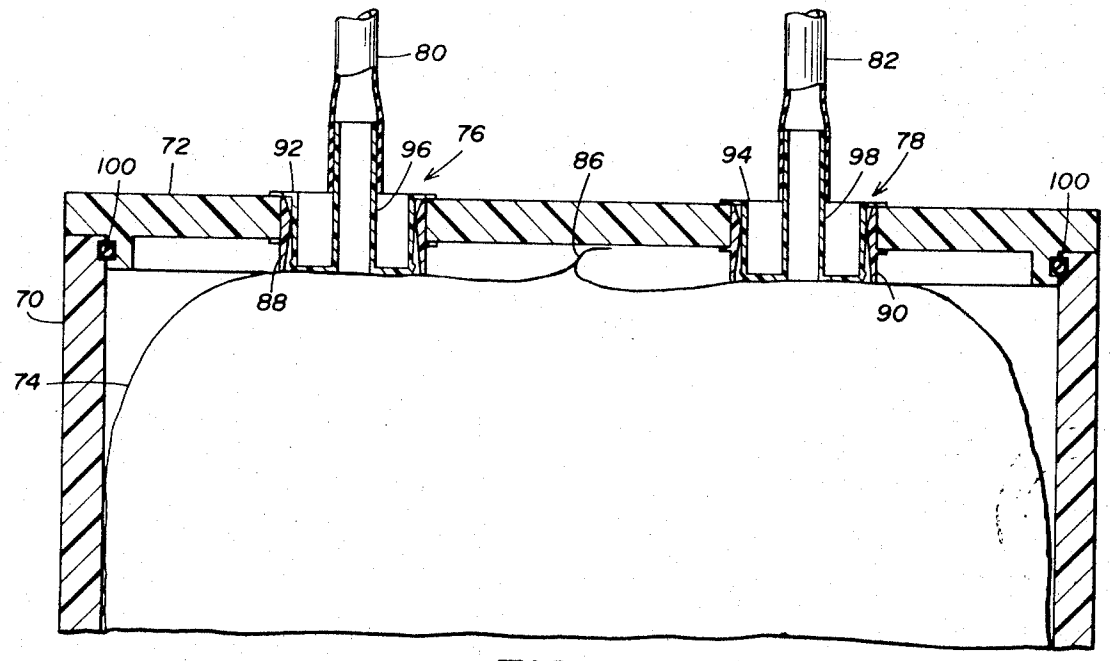

FIG. 11

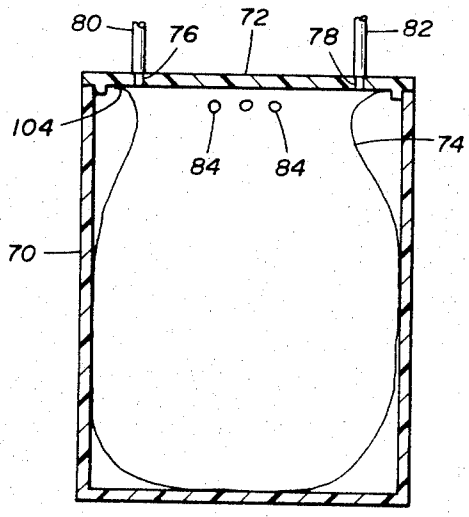

FIG. 12

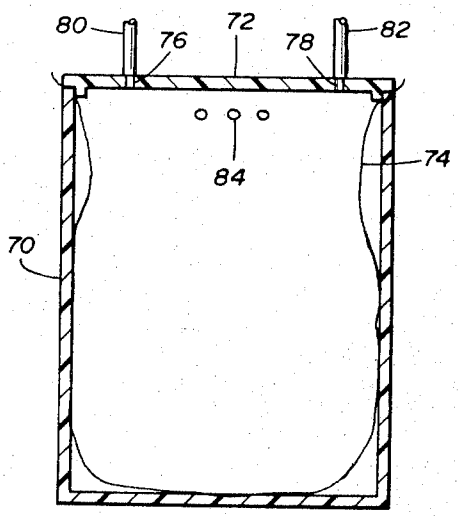

FIG. 13

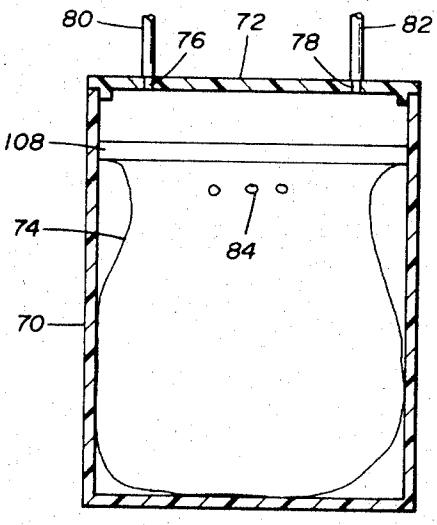

FIG. 14

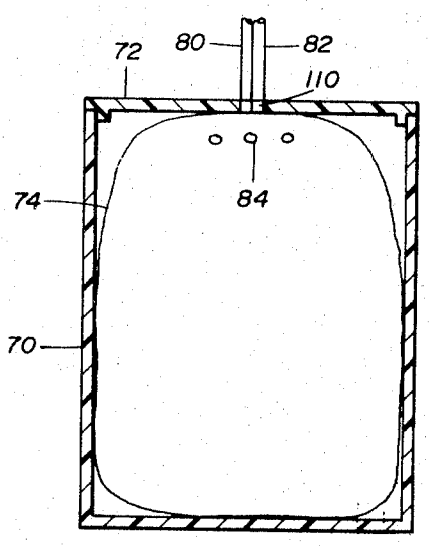

FIG. 15

MEDICAL SUCTION METHOD AND APPARATUS

FIELD OF THE INVENTION

This invention relates to a suction method and apparatus, and more particularly relates to suction method and apparatus for drawing fluids from a patient area and storing the fluid in a disposable flexible bag.

THE PRIOR ART

Suction devices are commonly used in a number of medical applications to draw various fluids from a patient area and to store the fluids for later disposal. For example, suction devices have heretofore been utilized to draw aspirated fluids from a patient during a surgical operation, and during the postoperative period. In addition, suction devices are used to drain fluids from the gastrointestinal tract, as well as to drain pulmonary mucus in tracheal incisions and the like.

One such suction apparatus which has long been used comprises a rigid bottle, generally made from glass, which includes a cap connected to a first conduit for connection to a source of reduced pressure and a second conduit for connection to the patient area to be drained. The reduced pressure is transmitted through the glass bottle and draws the fluids from the patient area for storage within the glass bottle. After filling, the cap may be removed and the fluids poured from the bottle. The bottle must then be sterilized for additional use. Such sterilization procedures are not only costly and time-consuming for the hospital, but sometimes result in cross-contamination due to inadequate sterilization. Moreover, the use of glass bottles has often been found to be somewhat of a hazard, due to breakage and chipping problems.

In order to reduce the problems inherent in conventional glass suction bottles, it has heretofore been known to utilize a generally rigid outer container which supports a flexible drainage bag therein for collection of fluids. After use, the flexible drainage bag is removed and is disposed of, leaving the outer rigid container sterile and ready for additional use with another flexible drainage bag. An example of such a previously developed suction device is disclosed in U. S. Pat. No. 3,556,101, issued Jan. 19, 1971, to S. G. Economou.

Because of the use of a flexible bag, it is necessary to insure that the bag does not collapse during the application of suction to the interior of the bag. Therefore, the Economou patent discloses the use of an aperture in the vacuum conduit which provides vacuum to the area between the flexible bag and the outer rigid container to prevent collapse of the bag. This type of suction device, however, has been found to exert considerable stresses upon the flexible drainage bag, and relatively heavy-weight and expensive bags are required to be utilized in order to prevent rupture of weak points or heat-sealed portions of the bags. In particular, stress problems with respect to the flexible bags of prior art devices occur when the drain conduits become obstructed, such as where a drain conduit catheter is inserted, or when mucus or other fluids stop up the conduits. Such obstructions of the drain conduit cause a substantial increase in the vacuum applied to the outside of the bags, thus substantially increasing the stress on the bag and increasing the chances of failure of the bag. Moreover, previously developed devices utilizing flexible bags have sometimes developed leaks around the cover of the rigid container or about the connection of the various vacuum conduits. Due to the construction of such prior art devices, the bags used therewith tend to collapse upon the occurrence of a vacuum leak, and the fluids within the bag are then sucked into the central piping system of the hospital.

SUMMARY OF THE INVENTION

In accordance with the present invention, a medical suction apparatus is provided which utilizes a flexible drainage bag supported within a generally rigid container, the flexible bag remaining in a generally unstressed opened condition during suction operation for reception of drainage fluids. The present apparatus may thus be operated with relatively lightweight and inexpensive drainage bags, and may be constructed in an extremely economical manner. After filling with drainage fluids, the present flexible bag may be removed and completely disposed of so that the chances of cross-contamination are substantially reduced. The present suction apparatus is nonbreakable, and has limited space requirements for storage.

In accordance with a more specific aspect of the invention, a medical suction apparatus includes a generally rigid container supporting a flexible drainage bag. Plural conduits extend to the exterior of the container for connection to an area to be drained and for connection to a source of reduced pressure in order that fluid from the area to be drained is drawn into the bag. Apertures are formed in the bag in order to tend to equalize the pressure on both sides of the bag to prevent the bag from becoming closed during suction operation, while maintaining the bag in a generally relaxed position during suction operation.

In accordance with another aspect of the invention, a medical suction apparatus is provided wherein a source of reduced pressure is applied through a rigid container to a patient area to be drained. A flexible bag is dimensioned to be received within the container and includes a conduit for communicating with the patient area in order to receive fluid therefrom. Apertures are formed in the bag for equalizing the pressure between the interior and the exterior of the bag during suction operation.

In accordance with another apsect of the invention, a generally rigid open-topped container is adapted to receive a flexible drainage bag. A drainage conduit extends from the upper portion of the bag to the exterior of the container. A vacuum conduit extends from the space between the container and the bag to the exterior of the container for connection to the source of reduced pressure. A cover for the container supports the drainage conduit and apertures are defined in the upper portion of the bag for applying reduced pressure through the bag to the drainage conduit while preventing the bag from becoming closed during suction operation.

In accordance with another aspect of the invention, a medical suction device utilizes a flexible drainage bag supported within a generally rigid container. A first conduit member is mounted through the upper part of the bag, the first conduit member including an annular base for being attached to the interior of the bag and a hollow cylindrical extension extending through an aperture in the bag. A cover for the top of the container includes a hole for receiving the cylindrical extension. A second conduit member includes a central opening therethrough and has an outer diameter for being

fixedly attached to the first conduit member from the top of the cover to thereby suspend the bag from the cover. A conduit may then be attached between the central opening and a patient area.

In accordance with yet another aspect of the invention, a method of medical suction includes applying suction to the space between the exterior of a flexible bag and the interior of a generally rigid container. Suction is communicated from the space through the sides of the bag to the interior of the bag. The suction is then applied from the interior of the bag to a patient area to draw fluids into the bag.

In accordance with another aspect of the invention, a method of medical suction includes applying suction to the interior of a flexible bag supported within a generally rigid container. Suction is then applied from the bag to a patient area to draw fluid into the bag. The suction is also communicated through the walls of the bag to the space between the bag and the container in order to equalize pressure on opposite sides of the bag to prevent the bag from becoming closed during suction operation.

DESCRIPTION OF THE DRAWINGS

For a more complete understanding of the present invention and for further objects and advantages thereof, reference is now made to the following description, taken in conjunction with the accompanying drawings, in which:

FIG. 1 illustrates a perspective view of the preferred embodiment of the invention;

FIG. 2 is a sectional view taken along the upper portion of the flexible bag of the invention prior to connection within the rigid outer container;

FIG. 3 is a side view of the upper portion of the flexible bag of the invention;

FIG. 4 is a sectional view of the upper part of the assembled invention taken generally along the section line 4—4 in FIG. 1 illustrating the outer rigid container and the flexible bag;

FIG. 5 is an exploded view illustrating the connection of the drainage conduit members of the invention;

FIG. 6 is a sectional somewhat diagrammatic view of another embodiment of the invention illustrating support of the flexible bag from the top of the rigid container;

FIG. 7 is a sectional somewhat diagrammatic illustration of another embodiment of the invention illustrating support of an open-topped flexible bag by clamping the bag with the cover of the rigid container of the invention;

FIG. 8 is a sectional somewhat diagrammatic view of another embodiment of the invention illustrating support of a flexible bag by use of an adhesive strip;

FIG. 9 is a perspective view of another embodiment of the invention utilizing drainage and vacuum conduits which are connected into the flexible bag of the invention;

FIG. 10 is a sectional view of the upper portion of the flexible bag prior to insertion in the rigid container of FIG. 9;

FIG. 11 is a sectional view, partially broken away, of the suction device shown in FIG. 9;

FIG. 12 is a sectional somewhat diagrammatic illustration of another embodiment of the invention shown in FIGS. 9–11 illustrating support of the flexible bag from the container cover;

FIG. 13 is a sectional somewhat diagrammatic view of yet another embodiment of the invention shown in FIGS. 9–11 illustrating support of the flexible bag by clamping with the container cover;

FIG. 14 is a sectional somewhat diagrammatic view of yet another embodiment of the invention shown in FIGS. 9–11 illustrating support of the bag within the container by the use of an adhesive band; and

FIG. 15 is a sectional somewhat diagrammatic view of yet another embodiment of the invention shown in FIGS. 9–11 illustrating support of the flexible bag by means of a single dual conduit member.

DESCRIPTION OF THE PREFERRED EMBODIMENTS

FIGS. 1–5 illustrate the preferred embodiment of the invention. Referring to FIG. 1, a medical suction apparatus 10 comprises a generally rigid container 12 which is preferably an open-topped transparent plastic cylinder. Container 12 will generally include volume indicating markings, not shown, in order to enable visual reading of the fluid level stored in the container. A flexible drainage bag 14 is supported within the container 12 by a conduit member 16 attached within a cover 18 for the container. Cover 18 preferably comprises a transparent plastic lid which is snapped into place over the open top of the container 12 to tightly seal the container for maintenance of dependable suction during operation of the device. A flexible hose or tube 20 is connected at one end to the conduit member 16 and extends to a patient area for receiving fluids. A vacuum conduit member 22 extends through the cover 18 and is connected to a flexible tube 24 which extends to a source of reduced pressure. The source of reduced pressure may comprise any suitable source of vacuum or suction which is commonly found in hospitals. The conduit member 22 may comprise a plastic port integrally formed with the cover 18, or alternatively may comprise a metal tube which is threadedly received in an aperture in the cover 18.

An alternate embodiment of the present device, not shown, may comprise a second conduit member communicating with bag 14 through the cover 18. A short tube may be connected to the second conduit member and the tube normally clamped shut. After filling of the bag 14 with liquid, the tube may be unclamped and the liquid poured out through the second conduit member and the short tube. The short tube may then be clamped and the suction operation continued.

In the preferred embodiment of the invention, apertures 26 are spaced along the upper portion of the flexible bag 14 in the area between the conduit members 16 and 22. Preferably, the combined surface area of the apertures 26 is greater than the surface area of the central opening of conduit member 22, and the geometry and location of the apertures 26 are such that the resistance to gas flow therethrough is slightly less than the resistance to gas flow through conduit member 22. In this case, bag 14 will remain in a limp unstressed condition during initial operation of the device, and will gradually become opened as it is filled with liquid.

In some cases, it may be desirable to put a very slight initial stress on bag 14 prior to filling with liquid. For example, if bag 14 were supported from cover 18 in a different manner than as shown, it may be desirable to insure that the bag 14 is fully opened prior to filling with fluid. In such instances, the apertures 26 may be

dimensioned and positioned in the bag **14** such that the resistance to gas flow therethrough is equal to or slightly greater than the resistance to gas flow through the conduit member **22.** By thus controlling the ratio of gas flow resistance of apertures **26** and conduit member **22,** the pressure gradient across bag **14** may be controlled to impart a selected amount of slight stress to bag **14.** Upon the application of vacuum to the device in this case, bag **14** will slowly become distended in order to receive fluid. However, the apertures **26** will be dimensioned such that bag **14** will not be stressed by an amount sufficient to cause rupture or other damage.

In operation of the apparatus shown in FIG. **1,** vacuum or suction is applied via the tube **24** through the conduit member **22** to the space between the flexible bag **14** and the generally rigid container **12.** The suction is communicated through the apertures **26** into the interior of the bag **14,** and is then directed through the conduit member **16** and the tube **20** to the patient area. Fluid from the patient area is drawn by the suction through the tube **20** and the conduit member **16** to the bag **14** which receives and stores the fluid. Because of the location of the apertures **26** in the upper portion of the bag **14,** no fluid escapes into the interior of the container **12.**

The application of reduced pressure to the area between the bag **14** and the container **12** insures that the bag **14** does not close up or collapse during suction operation. However, because of the construction of the present invention, the pressure on the exterior and interior of the bag **14** is equalized, and thus the bag **14** is not outwardly stressed, but instead remains in a relaxed unstressed condition during suction operation. Elimination of outward stress on the bag enables the use of a relatively lightweight and inexpensive material for the construction of the bag, without danger of rupture of the bag. After the bag is filled with liquid, application of vacuum or suction through the tube **24** is terminated, the cover **18** is removed and the bag **14** is then removed, emptied and disposed of. Although not shown, a normally closed port may be defined in the bag to enable the bag to be easily emptied when desired. A new sterile bag **14** is then connected to the cover **18** and inserted into the rigid container **12** for reception of additional fluid, without the necessity of any sterilization or cleaning of the container **12.**

FIGS. **2** and **3** illustrate in greater detail the construction of the flexible bag **14.** Bag **14** preferably comprises a generally flat, rectangular bag sealed around the peripheral edges and sealed at the top by a heat-sealed strip **30.** The conduit member **16** is mounted through a hole in one side of the bag **14** and comprises a first conduit member **32** having an annular base **34** which is heat-sealed or glued to the interior of the bag **14.** The first conduit member **16** also includes a hollow cylindrical extension **36** which extends from base **34** through the hole in the bag **14.** The cylindrical extension **36** includes an inwardly extending area of increased thickness to provide a friction fit with a second conduit member **38.** The second conduit member **38** includes a central tube portion **40** having an opening therethrough to provide a path to the interior of the bag **14.** Prior to attachment of the bag **14** to the cover **18,** the conduit member **16** extends from the side of the bag in the manner shown in FIG. **2.** The bag **14** may thus be rolled into a relatively compact shape for easy packaging and storage.

FIG. **4** illustrates in greater detail the support of the bag **14** within the container **12.** The first conduit member **32** extends through an aperture in the cover **18** and frictionally receives the second conduit member **38** in order to secure the bag to the cover **18.** The drainage tube **20** is then secured to the central tube portion **40** and is extended to the patient area to receive fluid. The cover **18** includes an annular extension **44** which is dimensioned to be securely received by the interior side walls of container **12.** An O-ring **46** is carried by the extension **44** to insure a vacuum tight seal. The conduit **22** extends through the cover **18** and is rigidly connected thereto in order to receive the vacuum tube **24** in the manner previously described.

FIG. **5** illustrates an exploded view illustrating the manner of connection of the first conduit member **32** and the second member **38** to the cover **18.** Bag **14** is omitted from FIG. **5** for ease of illustration. The first conduit member **32** is extended through a hole **48** formed in the cover **18.** An annular lip **50** on the cylindrical extension **36** abuts with the lower edge of the hole **48** to properly position the first conduit member **32.** The second conduit member **38** is then disposed through the hole **48** from the top of cover **18** and manually snapped into frictional fit inside the cylindrical extension **36.** An annular lip **52** formed on the conduit member **38** properly positions the conduit member **38** relative to the cover **18.** The drainage tube **20** is then connected to the tube portion **40,** wherein fluids from the patient area may be directed into the interior of the bag **14.** The above-described conduit member construction enables ease of attachment of the bag **14** to the cover **18,** while maintaining a vacuum tight connection. However, due to the provision of apertures **26** in bag **14,** vacuum leaks in the conduit members or in the cover do not cause the bag **14** to collapse, as is the case with some prior art devices.

FIG. **6** illustrates another embodiment of the invention wherein the bag **14** has an open top and is heat-sealed about the periphery of the open top to the cover **18.** An annular heat seal **60** is utilized to permanently bond the bag **14** to the cover **18.** In this embodiment, the drainage conduit **16** and the vacuum conduit **22** are integral parts of the cover **18.** After use, the entire cover **18** and the attached bag **14** are disposed of and a new cover and bag assembly is then inserted into the container **12.**

FIG. **7** illustrates another embodiment of the invention wherein the bag **14** has an open top and is supported within the container **12** by wedging of the top of the bag between the cover **18** and the upper edge of the open top container **12.** In this embodiment, the vacuum conduit **22** is required to be disposed through the side of the container **12** in order to provide vacuum to the space between the bag **14** and the container **12.** In use, the cover **18** is removed and the bag **14** is positioned within the container **12.** The cover **18** is then disposed over the container **12** and pressed into place, thereby clamping the upper edge of the bag **14** and supporting the bag **14** in the desired position. After use, the cover **18** is removed, the bag disposed of, a new bag inserted and cover **18** again pressed into place.

FIG. **8** illustrates yet another embodiment wherein the bag **14** has an open top and is maintained in an opened position by a rigid plastic band **62.** The band **62** may include adhesive on the exterior in order to adhere to the interior walls of the container **12.** Alternatively,

an annular lip may be formed on the interior side of the container **12** in order to abut with and support the band **62.** Also in this embodiment, the vacuum conduit **22** is required to be disposed in the side of the container **12** in order to apply suction to the space between the bag **14** and the container **12** according to the invention.

FIGS. **9–11** illustrate another embodiment of the invention wherein vacuum is initially applied to the interior of the flexible bag, with apertures formed through the bag allowing the pressure on opposite sides of the bag to become equalized to prevent collapse of the bag. Construction of this embodiment is somewhat similar to that previously described, with a cylindrical open-topped rigid container **70** including a transparent plastic cover **72.** A flexible plastic drainage bag **74** is dimensioned to fit within the container **70** and is supported from the cover **72** by a drainage conduit **76** and a vacuum conduit **78.** A hose or tube **80** is connected to conduit **76** for attachment to a patient area to receive fluid, while a hose or tube **82** is connected to conduit **78** for attachment to a source of reduced pressure. A plurality of apertures **84** are defined in the upper portion of the bag **74** in order to allow the pressure between the interior and exterior of the bag **74** to become equalized to prevent collapse of the bag **74** during suction operation. Because of the use of holes **84,** complex tubing or conduit structure is not required to provide a vacuum to the space between the bag **74** and the container **70.** Moreover, with the use of the apertures **84,** the bag **74** is maintained in a generally relaxed condition during suction operation, and is not subject to rupture due to extension of the bag by the vacuum.

As shown in FIG. **10,** bag **74** is constructed in a manner similar to that previously described, and is made up of a pair of flexible sheets of clear plastic sealed around the edges and sealed at the upper edge thereof by a heat seal **86.** Conduits **76** and **78** are formed in the manner previously described with respect to conduit member **16,** and comprise first conduit members **88** and **90** which are heat-sealed and otherwise bonded to the interior of the bag **74** and which extend outwardly through apertures in the bag. The conduits further comprise second conduit members **92** and **94** dimensioned for friction fit within the first conduit members **88** and **90.** Central tubular portions **96** and **98** are dimensioned to receive flexible hoses or tubes.

Prior to placing the bag **74** in the container **70,** the conduits **76** and **78** are mounted on opposite sides of the bag in the manner shown in FIG. **2.** After assembly within the container, the conduits are vertically disposed in cover **72** in the manner shown in FIG. **11.** In the assembly of the bag within the flexible container, the cover **72** is removed and the first conduit members **88** and **90** are inserted through spaced apertures in the cover. The second conduit members **92** and **94** are then snapped into frictional fit within the first conduit members in order to securely attach the bag **74** to the cover **72.** The bag **74** is then positioned within the container **70** and cover **72** is snapped into fit with the top of the container **70.** Cover **72** includes O-rings **100** in order to provide vacuum seal.

Hoses **80** and **82** are then attached to the conduits **76** and **78** and directed to the patient area and connected to the source of reduced pressure. Vacuum is applied via the hose **82** to the interior of the bag **74.** The vacuum is then transmitted through the hose **80** to the patient area and fluid is drawn into the bag **74.** Reduced pressure is communicated through the aperture **84** in the bag in order to substantially equalize the pressure on opposite sides of the bag to prevent collapse of the bag during suction operation. Once the bag **74** is filled with fluid, the cover **72** is removed from the container **70,** the bag **74** disconnected from the cover **72** and the bag disposed of. A new bag may then be attached to the cover **72,** and the bag and the cover **72** assembled with the container **70** for further use.

FIG. **12** illustrates another embodiment ofthe structure of the invention shown in FIGS. **9–11.** In this embodiment, bag **74** comprises an open top flexible bag which is bonded to the cover **72** by an annular heat seal **104.** Because the bag **74** is connected with cover **72** in this embodiment, drainage conduit **76** and vacuum conduit **78** are not required to be attachable, and may be integrally formed with the cover **72.**

FIG. **13** comprises an embodiment somewhat similar to that shown in FIG. **12,** wherein the bag **74** comprises an open top flexible bag which is positioned within the container **70** and is then clamped into place by attachment of the cover **72** to the container **70.** Also in this embodiment, conduits **76** and **78** need not be detachable and may be integrally formed with the cover **72.**

FIG. **14** comprises yet another embodiment of the invention shown in FIGS. **9–11,** wherein the bag **74** comprises an open top bag having a generally rigid band **108** connected to the top thereof. The exterior of the band **108** may include adhesive so that the bag **74** may be properly positioned and supported from the interior walls of the container **70.** Alternatively, suitable lips may be formed on the interior of the walls of the container **70** to support the band **108** in the desired position. In operation, the top **72** is removed and the bag **74** disposed within the container **70.** The band **108** is then pressed against the interior walls of the container **70** so that the adhesive maintains the bag **74** in the desired position. Alternatively, the bag **74** is dropped into position within the container **70** and the lips therein abut against the ring **108** in order to properly support the bag **74.**

FIG. **5** illustrates another embodiment wherein the bag **74** is rigidly attached to a one-piece conduit member **110** which extends through the cover **72.** The drainage hose **80** and the vacuum hose **82** may be connected through a suitable aperture in the one-piece conduit **110** to provide operation in the manner previously described. In this embodiment, the bag **74** is totally suspended by a single conduit, thereby eliminating connection of the bag to plural conduit members. The single conduit member may be detachable from cover **72,** or integrally formed with the cover.

It may thus be seen that the present suction device may be very economically manufactured and utilized. Due to the flexible nature of the bags utilized, the suction apparatus may be conveniently stored in a relatively small package, thereby resulting in considerable space-saving in hospital environments. Because of the particular operation of the device, the flexible bags utilized are not subject to excessive stress during suction operation, and therefore may comprise relatively lightweight and economical plastic bags. The present device is extremely simple in design and construction, and thus in not generally subject to maintenance problems and may be operated with a minimum of instruction. Moreover, the bags of the present device do not tend to collapse in case of a vacuum leak in the cover or in

the conduit members. The flexible bags of the invention are also completely disposable so that cross-contamination from patient to patient is reduced.

Whereas the present invention has been described with respect to specific embodiments thereof, it will be understood that various changes and modifications will be suggested to one skilled in the art, and it is intended to encompass such changes and modifications as fall within the scope of the appended claims.

What is claimed is:

1. In a medical suction apparatus wherein a source of reduced pressure is applied through a rigid container to a patient area to be drained, the combination comprising:

a flexible bag dimensioned to be received within said container and having an open top for receiving fluid from said patient area,

aperture means formed in said bag for equalizing the pressure between the interior and exterior of said bag during suction operation, and

adhesive means for attaching said bag at the top thereof to the interior sides of said container.

2. In a medical suction apparatus wherein a source of reduced pressure is applied through a rigid container to a patient area to be drained, the combination comprising:

a flexible open top bag dimensioned to be received within said container and for communicating with said patient area to receive fluid therefrom,

aperture means formed in said bag for equalizing the pressure between the interior and exterior of said bag during suction operation, and

a band connected to the top of said bag for abuting with an annular support edge formed in the interior sides of said container for attaching said bag within said container.

3. A medical suction system comprising:

a rigid open-topped container,

a rigid top for being removably attached over the top of said container,

a flexible collection bag comprising a rectangular flat bag having a closed bottom dimensioned to be received within said container and including a plastic conduit assembly in the top thereof for receiving fluid from a patient,

said plastic conduit assembly including an outer cylindrical member and a central tube member concentrically disposed within said outer cylindrical member,

port means defined in the upper portion of said bag for preventing collapse of said bag during suction operation,

circular side walls defining an aperture through said rigid top for receiving said outer cylindrical member of said plastic conduit assembly to support said bag from said top, said central tube member of said plastic conduit assembly extending through said aperture in said rigid top without touching the sides of said aperture for connection to a conduit leading to a patient area, said plastic conduit assembly operable to be removed from said top after use of said bag, and

vacuum conduit means communicating with said container for reducing the pressure within said bag to draw fluid from a patient into said bag.

4. The medical suction system of claim **3** wherein said port means comprises a plurality of holes defined through the side walls in the upper part of said bag, a predetermined ratio of resistance to gas flow of said holes and said conduit means being provided to impart a selected pressure gradient between the interior and exterior of said bag.

5. The medical suction system of claim **3** wherein said vacuum conduit means extends from the space between said container and said bag to the exterior of said container for connection to a source of reduced pressure.

6. The medical suction system of claim **3** wherein said vacuum conduit means is attached to and communicates with the upper part of said bag and extends to a source of reduced pressure.

7. The medical suction system of claim **3** wherein said port means comprises a plurality of holes disposed along the upper portion of said bag, said holes having a surface area at least as great as the surface area of said vacuum conduit means.

8. A disposable flexible medical fluid collection bag for being supported within a rigid suction container having a conduit for applying reduced pressure comprising:

a rectangular flat bag constructed from generally transparent flexible plastic walls,

a generally rigid conduit assembly mounted through the upper portion of said bag for receiving fluid from a patient,

said conduit assembly including an annular base heat-sealed to the interior of said bag and a hollow cylindrical extension extending from said base through an aperture in said bag, and

at least one port formed in the upper portion of said bag for communicating pressure between the exterior and interior of said bag, said port being dimensioned such that said bag remains in a generally limp, unstressed condition during operation thereof and gradually becomes open as said bag is filled with liquid.

9. The medical fluid collection bag of claim **8** wherein the surface area of said port is greater than the surface area of the conduit applying reduced pressure.

10. The medical fluid collection bag of claim **8** wherein said conduit assembly is dimensioned to be attached to the top of the suction container and includes a central tube which does not contact the top of the suction container.

* * * * *