April 28, 1925. 1,535,611

A. A. LE ROUX

RAZOR SHARPENER

Original Filed Oct. 1, 1921

Fig. 1.

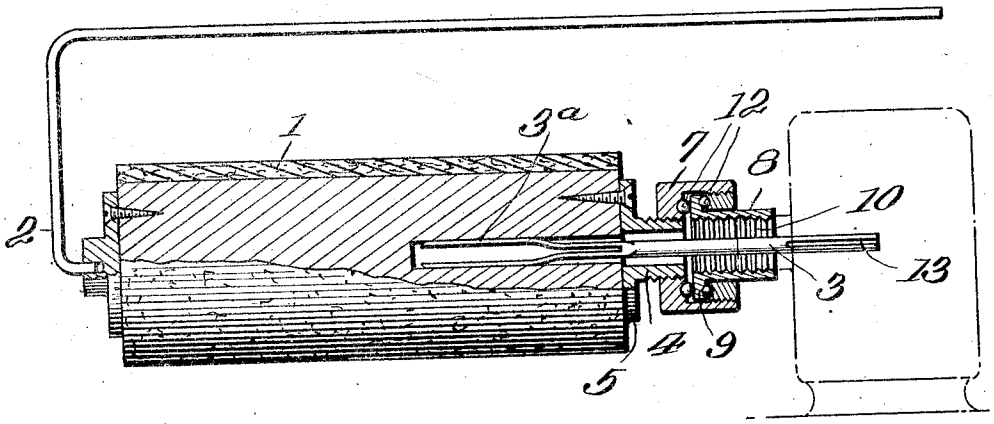

Fig. 2.

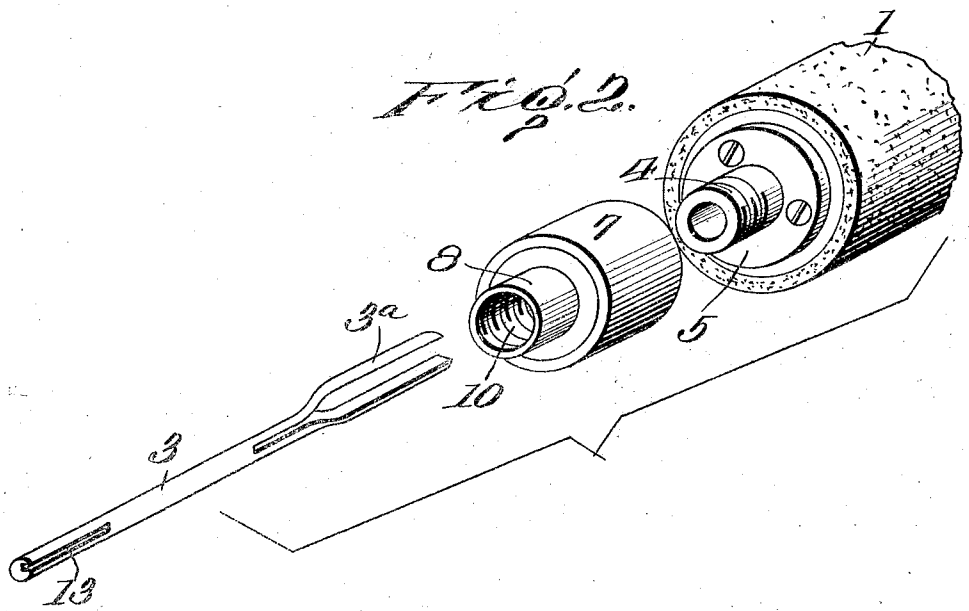

Inventor

ALEXANDER A. LE ROUX.

By Joseph T. Watson

Attorney

Patented Apr. 28, 1925. 1,535,611

UNITED STATES PATENT OFFICE.

ALEXANDER A. LE ROUX, OF LAKE PLACID, NEW YORK.

RAZOR SHARPENER.

Application filed October 1, 1921, Serial No. 504,793. Renewed March 10, 1925.

To all whom it may concern:

Be it known that I, ALEXANDER A. LE ROUX, a citizen of the United States, of Lake Placid, in the county of Essex, State of New York, have invented certain new and useful Improvements in Razor Sharpeners; and I do hereby declare the following to be a full, clear, and exact description of the invention, such as will enable others skilled in the art to which it appertains to make and use the same.

My invention comprehends a rotary element, such as a drum, constituting the sharpening device. In order to get the correct results from a sharpener of this character the blade must be held upon it with just the correct degree of pressure; otherwise an uneven edge is created. Practice has shown that the human hand cannot always be depended on to nicely control the pressure, and consequently if the drum always rotates at a uniform speed unsatisfactory results are very liable to follow. My invention, therefore, provides a yielding engagement between the drum and the spindle on which it is mounted, so that while the drum will rotate with the spindle in the absence of a given degree of pressure upon the drum yet a pressure, applied preferably with the back of the blade, in excess of this degree will allow of a slipping between the drum and its spindle and retard the rotation of the drum and thus enable the proper manipulation of the blade.

Fig. 1 is an elevation, partly in section, of a device embodying my invention. Fig. 2 shows some of the parts removed.

The drum 1 is covered with a suitable friction surface, preferably leather. It is shown supported at one end by a bracket 2. 3 is a spindle or shaft driven by any appropriate motor. The drum is centrally bored to receive the end 3^a of the spindle and this end is split longitudinally to form a bifurcated extremity whose members are slightly flared so that they tend to spread apart and frictionally engage the wall of the bore of the drum. This engagement is such that normally the drum will rotate at the same speed as the spindle. When, however, an excess of pressure exists it will be communicated by the drum to the bifurcated extremity of the spindle, causing the members to partially close together, and allow a slipping action between the drum and the spindle.

I also make provision for insuring the smooth and steady movement of the drum. A lug 4 projects from the end of the drum. It is bored or hollow in alinement with the bore in the drum and held to the drum by a face plate 5. It is exteriorly threaded. A sleeve 7 is internally threaded to take on lug 4. The spindle rotates freely within the lug and sleeve. A collar 8 freely encircles the spindle and is internally threaded as at 10 for attachment to a motor casing. It extends into the sleeve where it terminates in a flanged head 9. On each side of this head is a series of ball bearings 12.

By this means the lug 4 and sleeve 7 rotate with the drum, while the collar 8 constitutes a fixed support. Consequently the variations in speed of the drum do not disturb the smoothness of its motion.

I have shown the end 13 of the spindle channeled to adapt it for connection to the armature of the ordinary commercial type of electric motor.

I claim as my invention:

1. In a blade sharpening device, a drum, a rotary spindle having a forked flexible extremity to frictionally engage the drum whereby the drum and spindle normally rotate at the same speed but allowing rotation of the drum to be retarded relative to that of the spindle upon undue pressure on the drum.

2. In a blade sharpening device, the combination with a rotary spindle, a drum thereon, and yielding means allowing the rotation of said drum to be retarded relative to that of said spindle when undue pressure is brought on the drum, of a sleeve movable with said drum, a collar adapted for connection to a motor casing and extending into said sleeve, said collar having a flanged head at its inner end, and ball bearings at both sides of said head.

In testimony whereof I have signed this specification.

ALEXANDER A. LE ROUX.