July 14, 1931. C. J. R. H. VON WEDEL 1,814,499

CIRCUITS FOR DISCHARGE TUBES

Original Filed Feb. 17, 1928

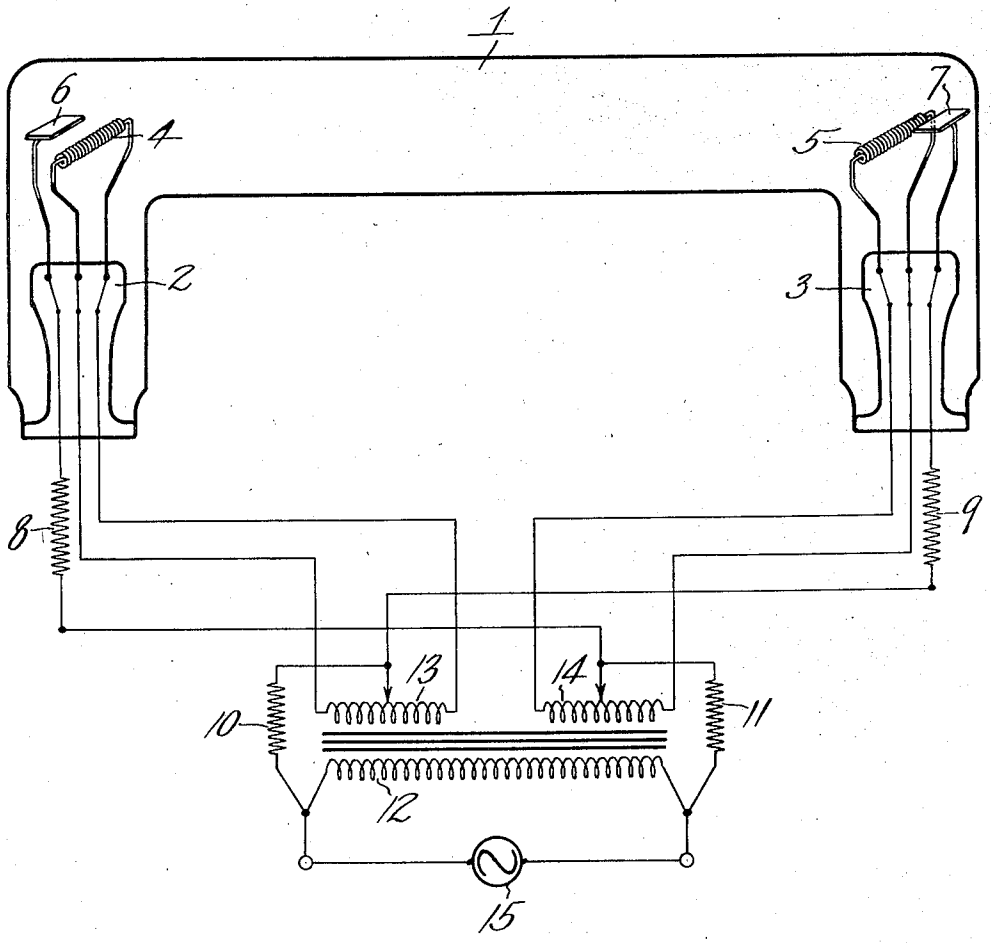


Inventor
CARL J. R. H. VON WEDEL

By Attorney

Patented July 14, 1931 1,814,499

# UNITED STATES PATENT OFFICE

CARL J. R. H. von WEDEL, OF BERLIN, GERMANY, ASSIGNOR, BY MESNE ASSIGNMENTS, TO ELECTRONS, INC., A CORPORATION OF DELAWARE

## CIRCUITS FOR DISCHARGE TUBES

Application filed February 17, 1928, Serial No. 254,921. Renewed March 6, 1931.

The present invention relates generally to circuits for discharge tubes, and more particularly to circuits for gas-filled discharge tubes in which starting or leading electrodes are employed.

An object of the invention is to provide a circuit arrangement by which the currents are automatically shifted from the auxiliary discharge paths to the main discharge path, and vice versa, as starting and proper operation of the tube may require. A further object is the proper regulation of the currents in the several discharge paths of the tube and circuits connected thereto.

A further object of the invention is the provision of an arrangement whereby the main discharge of the tube can be brought about without resorting to a potential greatly in excess of that needed for maintaining the tube in operation once the main discharge has commenced.

Another object is the provision of means for operating the discharge tube from an alternating current source including provision for causing the new discharge which must take place at each half cycle of the alternating current to commence early in the development or rise of each half cycle of current.

A still further object is to regulate the ionic bombardment suffered by the cathode, and thereby regulate the heating of the cathode by reason of such bombardment.

The invention is explained in detail in connection with the one figure of the accompanying drawing in which a glass vessel 1, or other suitable envelop, for a gas-filling in which to create an electrical discharge for any desired purpose has main discharge electrodes 4 and 5 suitably spaced therein. These electrodes are preferably of the electron emitting type, such as the wire coiled on a suitable core as shown arranged to be heated by currents from secondary windings 13 and 14 of the indicated alternating current transformer, though normally cold electrodes adapted to be heated by the ionic bombardment accompanying the discharge in the tube may be employed.

Since the two electrodes 4 and 5 alternately act as anode and cathode when the tube is energized by alternating current they alternately suffer severe ionic bombardment when acting as anodes. For this reason it is particularly desirable if an electron emitting type of electrode is employed to provide one that will withstand such bombardment over a considerable period of time, such as a metal wire having an electron emitting and hardened coating of one or more "electron emissive compounds," or layers of such coatings. Such electrodes have been found to be most desirable in the presence of bombardment.

Auxiliary electrodes 6 and 7 are shown in close relation to the main discharge electrodes 4 and 5 respectively. The main electrodes are shown connected across the potential of alternating current source 15 through resistances 10 and 11, and by way of center taps on secondary windings 13 and 14 having heating circuit connections to these main electrodes as shown. Auxiliary electrode 6 and main electrode 4 are shown connected across the potential of source 15 through resistances 11 and 8 on the one side, and center tap on secondary winding 13 and resistance 10 on the other side, and thus the polarity of auxiliary electrode 6 with respect to main electrode 4 is in step with the polarity of main electrode 5 with respect to main electrode 4 during an alternating current cycle. Auxiliary electrode 7 and main electrode 5 are connected across source 15 through resistance 10 and 9 on the one side, and center tap on secondary winding 14 and resistance 11 on the other side, and the polarity of auxiliary electrode 7 with respect to main electrode 5 is in step with the polarity of main electrode 4 with respect to main electrode 5 during an alternating current cycle.

The functions of the auxiliary electrodes are to aid in starting the main discharge between main electrodes 4 and 5 to avoid an undesirably high starting potential with respect to the operating or discharge maintaining potential once discharge has started, and to bring about an early starting in the opposite direction at the beginning of each half cycle of alternating potential.

If normally cold main electrodes are used the discharge between the main electrodes and

the auxiliary electrodes, starting more readily because of the close spacing, is relied upon to heat the main electrodes by bombardment to render them electron emitting to remove the normally very high cathode drop in the main discharge path, and thereby start the main discharge at a much lesser potential than would be necessary if the cathode drop had to be completely overcome by the potential between the main electrodes.

If heated electron emitting main electrodes are used the heavy clouds of electrons in the immediate vicinity of the emitter has the effect of readily neutralizing ions as fast as they may be created in the neighborhood, and thus tends to prevent the development of the intense ionization necessary to a discharge. The charged adjacent auxiliary electrode has the effect of dispersing the electron cloud to sufficient degree to permit ionization to develop without being neutralized at its inception, and thus again permits the starting of a main discharge at a much lesser potential.

It is obvious that these effects take place between half cycles when the direction of discharge must be reversed as well as at the starting of a tube into operation from a wholly inactive condition, so that when alternating current is used there is a creation of the new discharge at each half cycle very early in the rising of the potential. This has the value of avoiding in large measure flicker effects noticeable in tubes not so designed to start easily, an undesirable feature in tubes used for their light effects, such as the colored light tubes used for advertising purposes.

Once a discharge takes place the resistance of the discharge path falls to a lower value permitting larger currents to flow. This fact makes it most desirable to limit the amount of current that will flow in the auxiliary paths and circuits during and after their functions have been performed, otherwise the proximity of these auxiliary electrodes to the main electrodes would result in very intense auxiliary discharges, drawing heavy and wasteful currents from the supply source, and causing losses of potential that would deprive the main path of desired operating potential, in addition to needless destructive effects on the electrodes by heavy ionic bombardment. I accomplish the desired result by inserting in the auxiliary circuits suitably high resistances 8 and 9 which permit impressing substantially the full potential of the source across the auxiliary electrode and associated main electrode as long as there is no discharge and a high potential is needed for starting one, but as soon as a discharge takes place to permit current to flow a large part of the impressed potential is absorbed in the external resistance, and the auxiliary current therefore maintained desirably low. If the heated type of filament is used where no discharge and ionic bombardment is needed to beat the main electrode, but only a potential to disperse the electron cloud, then the resistance can be made very high to limit the auxliary discharge current to a very low value.

When the main discharge takes place between the electrodes 4 and 5, the potential necessary to maintain the discharge is not as high as that required for starting the discharge even though the starting potential is substantially reduced with the aid of the auxiliary electrodes. For this reason I insert in series with the main discharge circuit resistances 10 and 11 to limit the amount of the main discharge current to a desired operating value. These resistances 10 and 11 are considerably smaller in value than the resistances 8 and 9 in series with the auxiliary circuits, because the main discharge current must remain fairly large in order to give the desired results from the operation of the tube. They are connected between the source 15 and the connections of the auxiliary electrodes 6 and 7, and the drop of potential produced by them when the main discharge takes place further reduces the potential on auxiliary electrodes 6 and 7 at a time when it is desired to have the potentials of these electrodes low.

When the main discharge is in progress, there is heating of the main electrodes by ionic bombardment, which may be in addition to the heating of these electrodes by the heating currents in case the heated type of electron emitting electrode is used. When the main discharge ceases and the auxiliary electrodes come in operation, the ionic bombardment of these auxiliary discharges tends to maintain the heating of these electrodes. It is therefore seen that the arrangement provides for a tendency towards constant heating effect by ionic bombardment.

Having described my invention, I claim:

1. In a glow lamp system including an envelope having a gas therein, a plurality of incandescent electrodes spaced apart therein and auxiliary electrodes in close proximity to each of said incandescent electrodes, the combination of a transformer having a primary and a plurality of secondaries corresponding in number to said incandescent electrodes, connections between each secondary and each terminal of said primary, each connection containing a current limiting resistance and a connection between each terminal of said primary and the auxiliary electrode adjacent the incandescent electrode electrically connected to the other terminal of said primary, whereby the electron field around the incandescent electrode acting as an anode is dispersed and ionization of the gas surrounding said electrode is developed.

2. In a glow lamp system including an envelope having a gas therein, a plurality of incandescent electrodes spaced apart therein

and auxiliary electrodes in close proximity to each of said incandescent electrodes, the combination of a transformer having a primary and a plurality of secondaries corresponding in number to said incandescent electrodes, connections between each secondary and each terminal of said primary, each connection containing a current limiting resistance and a connection between each terminal of said primary and the auxiliary electrode adjacent the incandescent electrode electrically connected to the other terminal of said primary, each of said connections including a current limiting resistance, whereby the electron field around the incandescent electrode acting as an anode is dispersed and ionization of the gas surrounding said electrode is developed.

3. In a glow lamp system including an envelope having a gas therein, and a plurality of incandescent electrodes spaced apart therein, the combination of a transformer having a primary and a plurality of secondaries corresponding in number to said incandescent electrodes, connections between each secondary and each terminal of said primary, each connection containing a current limiting resistance, whereby said incandescent electrodes alternately act as cathodes and anodes.

4. In a gaseous discharge tube system, the combination of an incandescent main electrode and one or more other main electrodes, an auxiliary electrode adjacent to one of said main electrodes, a source of current connected across the main electrodes and across the auxiliary and one of the main electrodes, the two discharge paths being in shunt, and current limiting devices in series with each discharge path, the said current limiting devices being so related to each other that the auxiliary discharge path will establish sufficient ionization to destroy the space charge around the incandescent main electrode when the voltage from said current source rises to a value corresponding to the normal operating discharge voltage drop between the main electrodes.

5. In a gaseous discharge tube system the combination of incandescent main electrodes and an auxiliary electrode adjacent to one or more of the main electrodes, a source of current connected across the main electrodes and across the auxiliary electrode and one of the main electrodes, the main discharge path being in shunt to the auxiliary discharge path, and current limiting devices in series with each of said discharge paths, the said limiting devices being so proportioned that upon establishing sufficient ionization in the auxiliary discharge path to neutralize the space charge around the incandescent electrode, the main discharge will reduce the voltage across said auxiliary electrode system sufficiently to prevent rise in current in the auxiliary circuit beyond its value at the beginning of the main discharge.

6. In a gaseous discharge lamp system the combination of a plurality of main electrodes provided with an electron emissive coating of alkaline earth material and auxiliary starting electrodes for introduction of the main discharge in proximity to said main electrodes, connections from said main electrodes to an alternating current supply including a main discharge current limiting impedance, and a connection between each starting electrode and a nonadjacent main electrode connected to another terminal of the supply than the adjacent main electrode, said connection including a current limiting impedance, the said impedances being so proportioned that the main discharge current shunts the auxiliary starting discharge, whereby the average value and thereby, notwithstanding a rise in the supply voltage, the average heating effect of the auxiliary discharge on the main electrodes is automatically reduced if the main discharge current increases.

7. In a gaseous discharge tube system the combination of an oxide coated electrode and another electrode, a source of current connected to said electrodes and adapted to cause a discharge therebetween, means for heating said oxide coated electrode, and means governed by the said discharge for controlling said heating means to reduce its average value of heating effect on the oxide coated electrode with increase of current in said discharge.

8. In a gaseous discharge lamp system the combination of a plurality of incandescent electrodes spaced apart therein, auxiliary starting electrodes in proximity to each of said incandescent electrodes, a transformer having a primary winding adapted to be connected to a source of supply and a secondary winding adapted to supply heating current to each of said incandescent electrodes, connections between each secondary and each terminal of the primary, a main discharge current limiting impedance in each of said connections, a connection from each starting electrode to the heating secondary winding of the opposite incandescent electrode, and a current limiting impedance in said last named connection, the said limiting impedances being of such value that the main discharge current will start the auxiliary discharge between auxiliary electrode and adjacent main electrode and the auxiliary discharge current will be maintained constant with increasing main discharge current.

9. The method of controlling the starting of a discharge tube having an incandescent electrode which consists in neutralizing the space charge in the tube at the desired starting point when the applied voltage has risen

to a point above the normal operating discharge voltage drop of the tube.

10. The method of controlling a discharge tube having an incandescent electrode which consists in neutralizing the space charge in the tube at the desired starting point by creating an auxiliary discharge when the voltage applied to the main discharge has risen to a point above the normal operating voltage drop thereof, and shunting current from the auxiliary discharge to the main discharge in proportion to prevent rise of current in the auxiliary discharge above its initial discharge value.

CARL J. R. H. VON WEDEL.