March 20, 1934. V. L. PISTOCCO 1,951,947

METHOD OF PRODUCING CHARACTERS

Filed Sept. 15, 1932 2 Sheets-Sheet 1

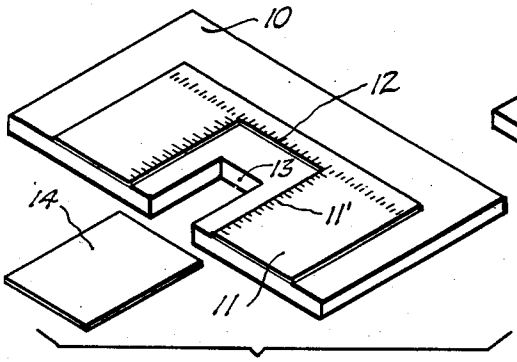

Fig. 1

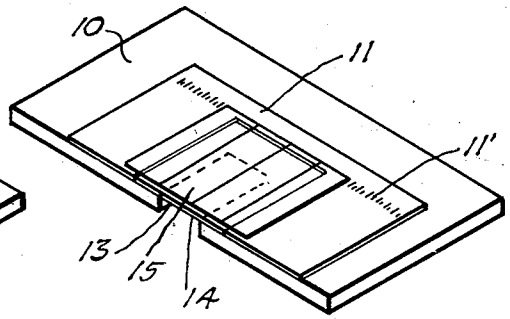

Fig. 2

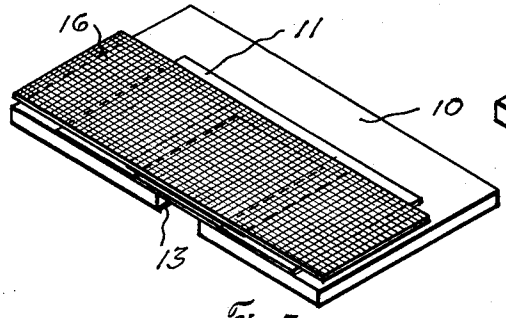

Fig. 3

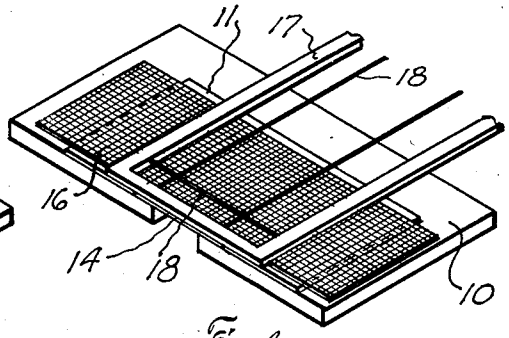

Fig. 4

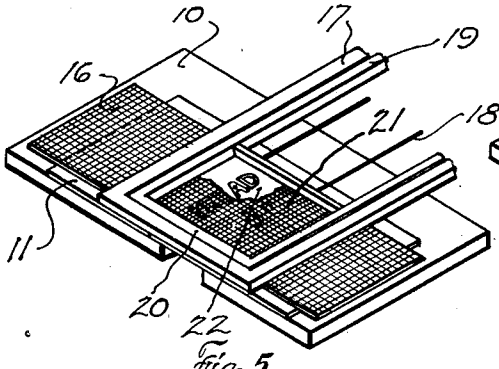

Fig. 5

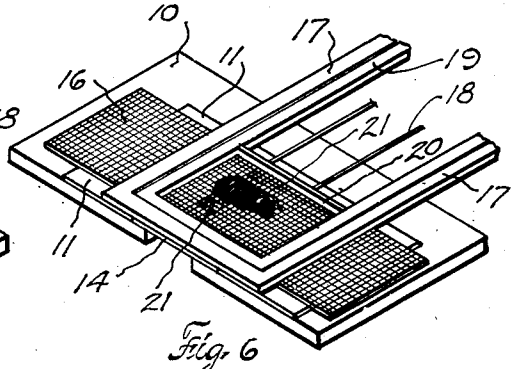

Fig. 6

Inventor
Verdope L. Pistocco

By Jack A. Ashley
Attorney

March 20, 1934. V. L. PISTOCCO 1,951,947

METHOD OF PRODUCING CHARACTERS

Filed Sept. 15, 1932 2 Sheets-Sheet 2

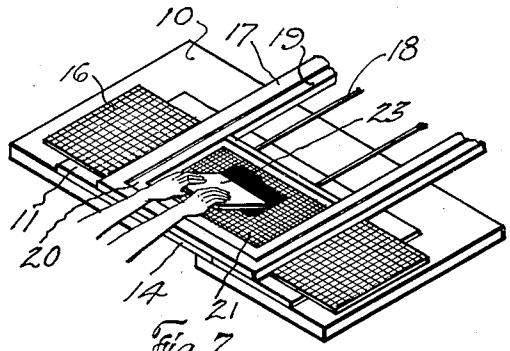

Fig. 7

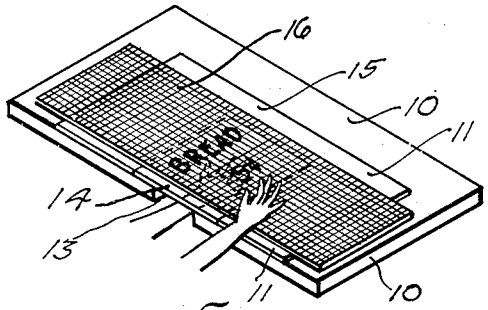

Fig. 8

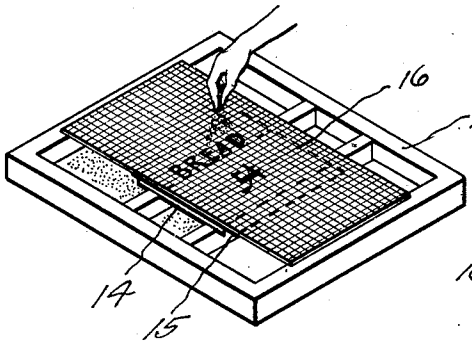

Fig. 9

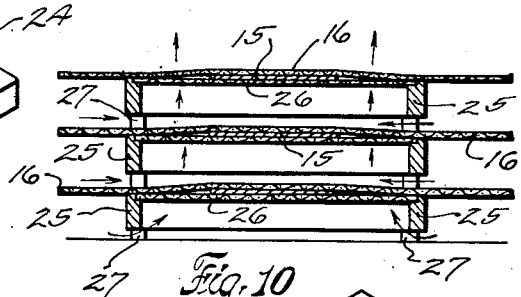

Fig. 10

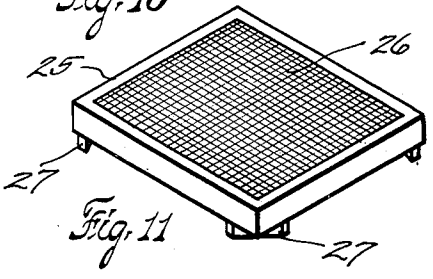

Fig. 11

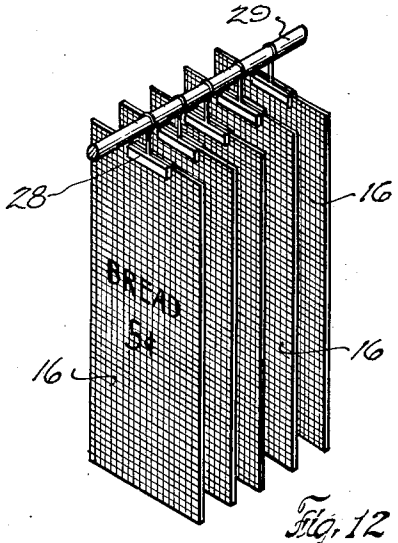

Fig. 12

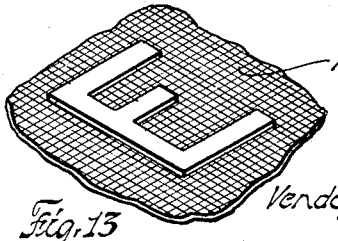

Fig. 13

Inventor
Vendope L. Pistocco

By Jack A. Ackley
Attorney

Patented Mar. 20, 1934 1,951,947

UNITED STATES PATENT OFFICE

1,951,947

METHOD OF PRODUCING CHARACTERS

Vendope L. Pistocco, Fort Worth, Tex., assignor to Screen Advertising, Inc., Dallas, Tex., a corporation of Texas

Application September 15, 1932, Serial No. 633,261

4 Claims. (Cl. 101—129)

This invention relates to new and useful improvements in methods of producing characters.

One object of the invention is to provide an improved method whereby characters, such as letters, figures, symbols, objects, and the like, may be readily, expeditiously and economically produced with plastic material or paint upon pervious or foraminous or impervious surfaces, whether rough or smooth.

A further object of the invention is to provide an improved method for producing characters in either transparent, translucent, opaque, or solid effects and of various colors and formations, which will be highly ornamental and attractive.

A particular object of the invention is to provide a method involving the passing of a plastic or semi-plastic coloring compound or composition or paint through a stencil, pattern, form or the like, which is attached to an open or coarse mesh fabric, such as woven wire fabric, nets, hardware cloth, and the like, whereby heavy embossed or thick characters, or light thin characters, may be produced, particularly on an open mesh wire fabric, such as is used for screens for windows and doors, but also on all other surfaces.

Another object of the invention is to provide an improved method of producing characters of colored compounds or compositions upon supporting surfaces, and involving the casting upon such characters of ornamental material, such as colored sand or other comminuted matter without rubbing or the like, and before such characters are dry.

Still another object of the invention is to provide an improved method of drying and curing characters produced as herein.

A construction designed for carrying out the method will be hereinafter described, together with other features of the invention.

The invention will be more readily understood from a reading of the following specification and by reference to the accompanying drawings in which devices for carrying out the invention are shown, and wherein:

Figure 1 is a perspective view showing the back separated from the table,

Figure 2 is a similar view showing the mat and tissue paper strip in place,

Figure 3 is a perspective view showing the wire fabric in place over the back and paper strip,

Figure 4 is a similar view showing the hold-down frame in position,

Figure 5 is a view similar to Figure 4 showing the stencil frame in place,

Figure 6 is a view similar to Figure 5 and showing a mass of compound on the stencil,

Figure 7 is a perspective view showing the squeegee in use by the operator,

Figure 8 is a perspective view showing the operator removing the work,

Figure 9 is a perspective view illustrating the ornamenting step,

Figure 10 is a vertical sectional view of the drying stack,

Figure 11 is a perspective view of one of the drying screens,

Figure 12 is a perspective view showing the fabrics hung for drying, and

Figure 13 is a perspective view of the finished product.

It has heretofore been the practice, as in my Letters Patent No. 1,729,842, issued October 1, 1929, to produce characters on supporting surfaces by passing paints and pigments through stencils, but in all such operations prior to my present invention, the stencil has been mounted on fine mesh cloth, such as silk, organdy and the like. Such methods have been slow because of the resistance offered to the passage of the paint or pigment by the fine mesh cloth. Further it has been necessary to use paints and pigments of such a consistency as to pass through the fine mesh cloth. Also it has not been possible to build up characters of substantial thickness because of the pressure required to force the paint or pigment through the cloth and because of the thinness or liquid state of the paint or pigment used.

In carrying out my present method, I use a woven mesh support for the stencil which is so open or coarse as to offer substantially no resistance to the passage of a plastic or semi-plastic compound or composition. It will be at once obvious that such a method has many advantages. First, the speed of production greatly reduces the cost, as well as the time required to carry out the method. Second, a heavy compound having the consistency of soft putty may be quickly pushed through the stencil with no straining or separating action, such as is present when a plastic compound is attempted to be forced through fine mesh cloth, the solids tending to remain on top of the cloth and the liquids passing through. Third, a heavy or thick character may be produced or built up. Fourth, the admixture will not be effected by passing a plastic or semi-plastic composition through the coarse mesh support, and the cohesion and adhesion of the solids and liquids will remain the same after passing

through as before passing. Fifth, the formation of a heavy or thick character gives sufficient body to provide for durability and permanency. Sixth, by using a coarse open mesh support for the stencil, whereby little or not resistance is offered to the passage of a heavy compound therethrough, stencils of various thicknesses, from that of tinfoil to that of extra heavy cardboard, may be successfully used to produce characters of various thicknesses.

In the drawings the numeral 10 designates a table, or other support, having a mat 11 mounted thereon. The mat is provided with a rectangular recess 12 and the table has a slot or opening 13 extending into the recess. A rectangular plate or back 14 is removably mounted in the recess 12 over the slot 13, as is shown in Figure 2. The back is of such size and thickness as to have a free fit in the recess 12 and lies substantially flush with the top surface of the mat, so as to be easily and quickly removed from said recess.

In carrying out the method, one or more strips 15 of tissue paper, or equivalent material, are laid on the back 14. The mat may be provided with suitable scales 11' for use in positioning the work. After the tissue paper has been placed in position the medium 16 on which the characters are to be formed is placed upon the mat with the tissue strip 15 under the portion where the characters are to be located. The scales 11' may be used in positioning the medium.

I have illustrated the medium 16 in the form of a woven mesh fabric, such as ordinary wire screen, which is used for doors and windows. However, any other pervious or foraminous medium may be employed, or an impervious medium might be used. As the purpose of the tissue paper is to prevent those portions of the characters which penetrate the wire fabric from adhering to the back 14, it is obvious that where the supporting medium is impervious the tissue paper will not be required and the medium could be supported on any flat surface.

The supporting medium 16 having been placed in position, as is shown in Figure 3, a holddown frame 17 is swung down over the medium 16 and this frame is provided with taut wires 18 for holding the medium in place, as is shown in Figure 4. A stencil carrier 19 is then swung down into the frame 17, as is shown in Figure 5. The stencil carrier supports a stencil frame 20 having its underside covered with a sheet 21 of coarse open mesh material and the stencil 22 is fastened against the underside of this sheet and preferably secured to the underside of the frame. In this way the stencil forms a bottom for the stencil frame and the sheet 21 overlies said stencil.

It is very important that the sheet 21 be formed of coarse open mesh material. Silk, organdy and other fine and close mesh materials, are to be avoided and wire mesh fabric, metallic net, hardware cloth, and the like, are to be used. So long as the meshes are clearly open and permit a free passage of the compound therethrough, the requirements will be satisfied. Supporting sheets having openings ranging from $\frac{1}{32}$ to $\frac{1}{16}$ of an inch square have been successfully used, but the invention is not to be limited to these dimensions.

With the stencil in place, a quantity of the composition or compound of which the characters are to be formed, is deposited in the stencil frame 20 on top of the sheet 21, as is shown in Figure 6. The operator, by means of a squeegee or flat blade 23, as shown in Figure 7, spreads the compound so that it passes through the openings of the stencil 22. The thickness of the stencil controls the thickness of the character which is formed on the upper side of the medium 16, and thus by regulating the thickness of said stencil the desired characters may be obtained. Where the medium 16 is of a foraminous or pervious nature, portions of the compound will pass therethrough and engage the tissue paper strip 15, thus forming the characters on the underside, as well as upon the upper side of the medium. However, the thickness of the characters on the underside of the medium will be much less than the thickness on the upper side, unless a very thin stencil is used.

In order to get the best results a composition or compound, such as I have described in my copending application, filed July 29, 1932, Serial No. 625,629, is preferably used, but it is to be understood that any compound or composition suitable for the purpose may be employed. The compound, of course, must not be liquid, but it may be semi-plastic as well as plastic. A compound composed of coloring matter, oils, a binder, and a body of comminuted material, having the consistency of soft butter has been successfully used; and a similar compound having the consistency of putty has been used with satisfactory results.

After the characters have been formed upon the medium 16, the carrier 19 is swung upwardly to remove the stencil. During this operation the wires 18 hold the medium 16 in place and this prevents distortion of the edges of the characters and assures sharp lines when the stencil is removed. The frame 17 is next raised and the medium 16, with its characters, may now be removed. The characters, being moist and comparatively heavy, must be supported, and, therefore, the operator places one hand under the back 14, as shown in Figure 8, and the other hand on top of the medium, so that when the medium is removed the back 14 will underlie the characters and support them.

An optional step in the method is the ornamentation of the characters, and if this step is desired, the back 14 and the medium 16 are placed on a sanding tray 24, as shown in Figure 9. Colored sand or other comminuted material is then sprinkled or cast upon the surfaces of the moist characters in such quantity and manner as may be desired. It is pointed out that it is not practical to rub or otherwise disturb the surfaces of the characters because of the softness and moist condition of the same. This was done in my patented method, hereinbefore referred to, but in that method thick heavy characters, such as are produced by the present method, were not made.

While any suitable drying operation may be carried out, I have found it advisable to lay each medium on a drying screen 25, as shown in Figures 10 and 11. Each screen includes a frame having a foraminous top 26 and underlying cleats 27. The medium 16, with its tissue paper strip 15 still adhering to its under side, is placed on top of the screen, as is shown in Figure 10, the back 14 having been removed before so placing. The next screen 25 is placed upon the medium and additional mediums and screens are placed in a stack as the method progresses. The cleats space the screens apart and the foraminous tops permit air to pass upwardly through the mediums, whereby a circulation is had. This air could be heated if desired.

When the characters have been sufficiently dried to become self-supporting, the screens 25

are removed and hangers 28 are attached to one end of each medium and engaged over a bar 29, as shown in Figure 12. This releases the screens 25 for further use and also permits the medium 16 to straighten out as the drying operation is completed. When the characters are nearly dry, the tissue paper strips 15 are stripped off. Great care must be taken to see that the characters are sufficiently dry so that the stripping will not distort or disintegrate the same.

It is obvious that where the characters are formed upon an impervious medium, a different drying procedure may be used, and, therefore, the invention is not to be limited to the drying steps herein set forth. In Figure 13, I have shown the completed article, and attention is directed to the thickness of the characters, as well as the sharpness and smooth contours thereof. This is largely due to the coarseness of the sheet 21 on which the stencil is supported and the thickness of the stencil 22 itself. While it might be possible to omit the open mesh sheet 21, it is obvious that the keys and points of the stencil must be supported and the constant wiping of the squeegee 23 over the stencil would soon destroy it and would probably distort it upon the first operation. The open mesh support 21 provides an excellent working surface and preserves the stencil for indefinite use. Where this open mesh sheet is made of wire, it is very durable and is easily and quickly cleaned, particularly where it is desired to change colors. The open meshes permit a free passage of the compound and the characters may be readily and quickly formed, thus making for a low cost and a rapid production.

Where a background or colored panel or characters formed of layers of different colors is desired, it is obvious that the process which has been described may be practiced to produce the background panel or first layer. When the work is sufficiently dry, the steps may be repeated and additional characters or layers built up upon the previously performed work. The hold-down wires 18 are very important because they prevent movement of the medium 16 when the stencil frame 20 is lifted. It is obvious that if the medium and the freshly formed characters are not held rigidly in place, the upward movement of the stencil 21 would not only distort the characters, but would have a tendency to produce ragged edges.

It is understood that the term "plastic" is used herein in its broadest sense, and the compound may have a wide variance in consistency, as of a very soft nature, such as that of mortar; or a stiffer consistency, such as that of putty; or of a firmer character, such as modeling clay.

It is also possible to produce a phantom effect, as set forth in my former patent, hereinbefore referred to. To carry out this step, it would merely be necessary to omit the tissue paper strip 15, use a thin stencil sheet 21, and impose the medium 16 directly on the back 14. Then by pulling the back 14 away from the foraminous medium 16, the compound would be withdrawn from the meshes of said medium, whereby a phantom effect would be had.

The description which has been given recites more or less detail of a particular embodiment of the invention, which is set forth as new and useful, however, I desire it understood that the invention is not limited to such exact details of construction and operation, because it is manifest that changes and modifications may be made, within the scope of the appended claims, without departing from the spirit of the invention.

What I claim and desire to secure by Letters Patent, is:

1. The method of producing characters which consists, in passing a plastic compound through a stencil, forming a background upon a supporting medium with said compound, then drying the background, then passing a plastic compound through a second stencil to form characters upon said background, and then drying said characters.

2. The method of producing weather-proof characters on wire mesh fabric which consists, in placing the fabric on a removable back, interposing a backing strip of tissue paper between the fabric and the back to prevent adhering of the characters to the back, then placing a stencil over the fabric and strip, then forcing by pressure a thick plastic composition through the stencil to form characters on said fabric, then removing the fabric with the back, while supporting the characters on said back, then removing the back from the fabric and strip, then partially drying the characters with the strip adhering thereto, and then removing the paper strip after said characters have sufficiently dried to separate therefrom and prior to complete drying of said characters.

3. The method of producing characters on wire mesh fabric which consists, in passing a plastic composition through a stencil to form a character on said fabric, then drying said character, then passing a plastic composition of contrasting color to that of the first character through a second stencil to form a second character upon the first formed character, and then drying said second character.

4. In the art of producing display characters on wire mesh fabric, the steps of placing the fabric to be ornamented on a removable back, interposing a strip of tissue paper between the fabric and the back, then placing a stencil over the fabric, then passing a thick plastic composition through the stencil and screening said composition to form smooth solid characters on said fabric, then removing the fabric with the back while supporting the characters on said back, then removing the back from the fabric and strip, then supporting the fabric for drying, and then removing the tissue paper before the characters are completely dried.

VENDOPE L. PISTOCCO.