Nov. 24, 1970 S. ALEWITZ 3,542,663

ANODE FITTING

Filed June 6, 1968 2 Sheets-Sheet 1

FIG. 1

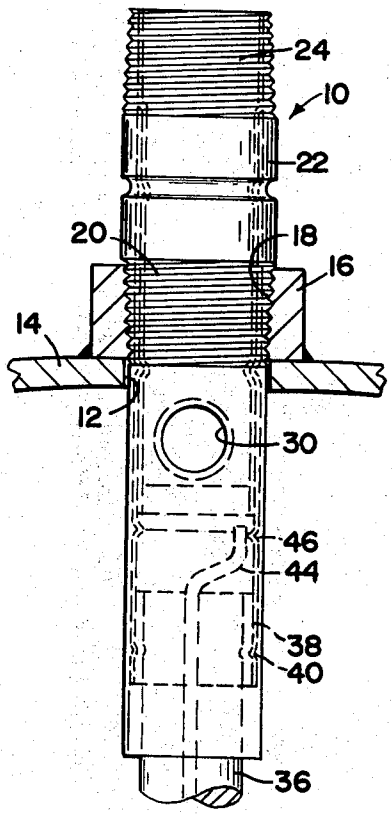

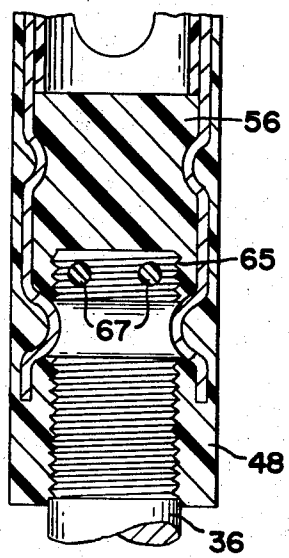

FIG. 8

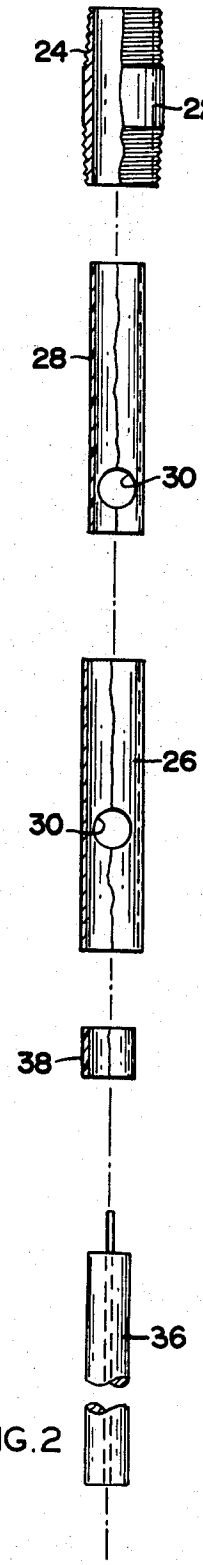

FIG. 2

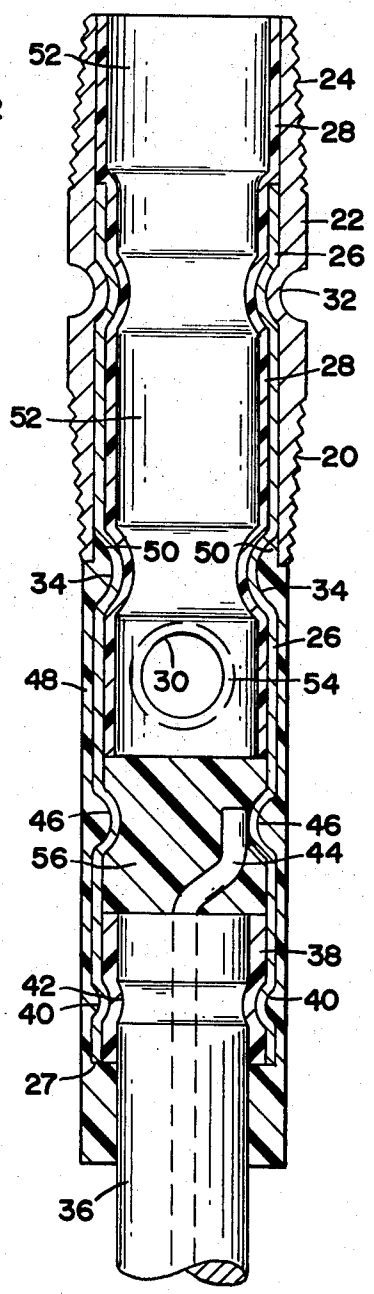

FIG. 3

INVENTOR.
SAM ALEWITZ

BY
Fay, Sharpe & Mulholland
ATTORNEYS.

Nov. 24, 1970 S. ALEWITZ 3,542,663

ANODE FITTING

Filed June 6, 1968 2 Sheets-Sheet 2

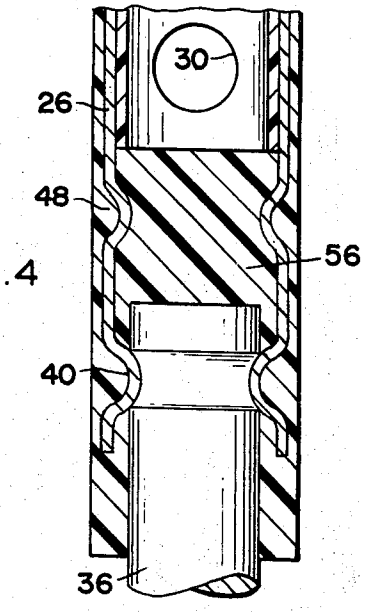

FIG. 4

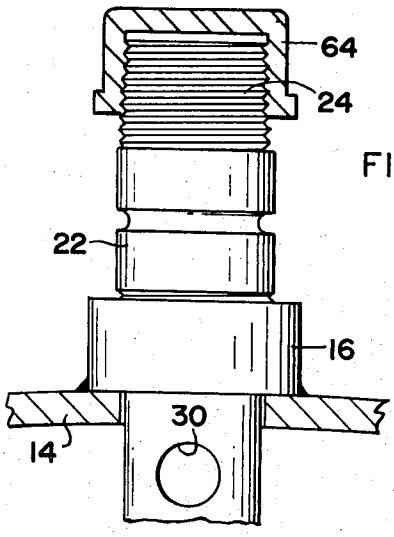

FIG. 5

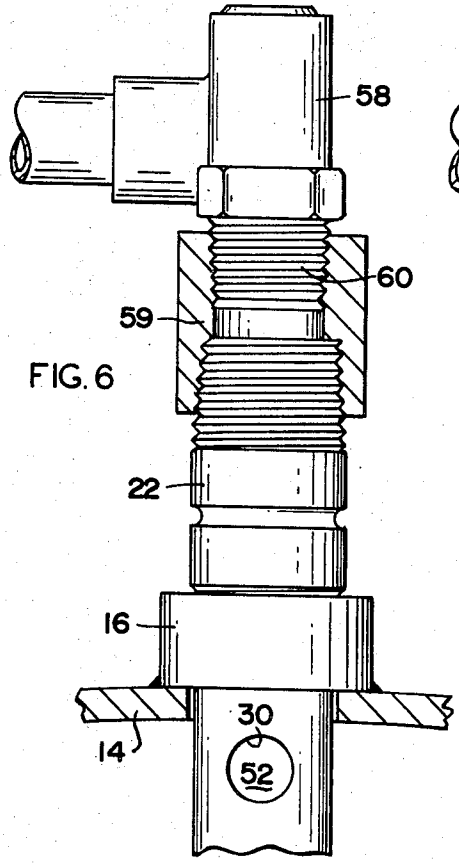

FIG. 6

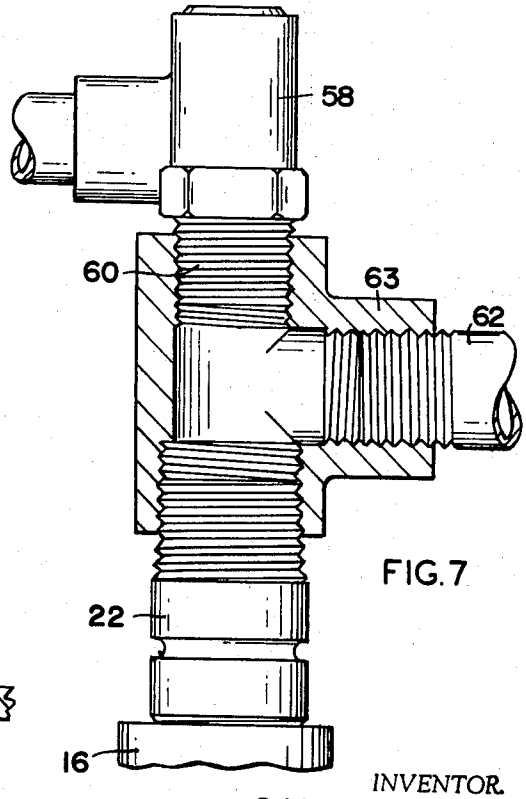

FIG. 7

INVENTOR.
SAM ALEWITZ

BY
Fay, Sharpe & Mulholland
ATTORNEYS.

United States Patent Office 3,542,663
Patented Nov. 24, 1970

3,542,663

ANODE FITTING

Sam Alewitz, South Euclid, Ohio, assignor to Perfection Corporation, Madison, Ohio, a corporation of Ohio

Filed June 6, 1968, Ser. No. 734,940
Int. Cl. C23f 13/00
U.S. Cl. 204—197 14 Claims

ABSTRACT OF THE DISCLOSURE

Disclosed is an anode fitting for use in hot water tanks, pipelines or the like wherein an interior metallic surface undergoes corrosion when exposed to electrolytic fluids such as air and water. The fitting provides for cathodic protection of the interior metallic surface against corrosion by the introduction of an electrode comprised of a metal that is higher in the electrochemical series than the metal defining the metallic surface. The electrode is electrically connected to the metallic surface. The difference in activity of the two metals induces a current to flow between them producing corrosion of the more active metal and furnishing cathodic protection to the less active metallic surface.

The fitting is comprised of a hollow nipple or connector member adapted to be threadedly received within an opening of the water tank, pipeline or the like. A tubular intermediate member is telescoped within the nipple, said members being rolled together to provide for electrical contact therebetween. A cylindrical electrode is telescoped within the tubular intermediate member and is secured thereto. An impervious plastic covering is provided on the external surface of the tubular intermediate member in order to reduce corrosion of this member and physically separate the external surface of the electrode from the external surface of the connector member. In one embodiment of the anode fitting, an impervious fluid passageway is provided within the tubular intermediate member and the connector member such that the anode fitting may be used either as a combination anode and fluid outlet or additionally in combination with a relief valve or other member requiring protection.

BACKGROUND OF THE INVENTION

This invention relates to an improved anode fitting for use in the cathodic protection of metal surfaces such as the internal wall of water heaters, water tanks, pipelines, heat exchangers, and the like.

When metals, particularly iron, are exposed to air and water, they undergo corrosion. The corrosion reaction is slow in pure water, but rapid in solutions of electrolytes. The corrosion reaction can be explained as an electrochemical phenomenon. It appears that minute, primary electrical cells are set up when corrosion takes place. When iron is in contact with water containing electrolyte, iron ions immediately go into solution. From a somewhat oversimplified point of view, one may imagine that the attractive forces of the electrolyte molecules exceed the cohesive forces which hold the iron ions in their crystalline lattice. Every positive ion which goes into solution leaves one electron behind for each valence which the ion possesses. These electrons tend to collect at the less active portions of the iron (having a lower electrode potential) and combine with hydrogen ions to form hydrogen gas. Several methods of preventing or retarding corrosion have been proposed including alloying iron with certain other elements such as chromium or silicon and application of electrochemistry to produce cathodic protection.

This invention relates to electrochemical protection of iron or other metals through cathodic protection. The

primary function of this invention is to provide a galvanic anode assembly or fitting adapted to be introduced into a water heater, pipeline or the like. The fitting includes a metal that is more active than the metal comprising the water heater, pipeline or the like. The more active metal is electrically connected to the metal to be protected. The difference in activity of the two metals induces a current to flow between them, producing corrosion of the more active metal and furnishing cathodic protection to the iron or less active metal.

Several anode fitting designs have been proposed in the prior art to produce corrosion of an active anode member while furnishing cathodic protection for the less active member. These prior art anode fitting assemblies generally comprise a nipple or a plug member adapted to be threadedly received in the wall of a water heater or the like and an electrode secured to the nipple or plug member. A number of disadvantages of the prior art anode fitting devices have been observed. A significant disadvantage is the fact that the anode of the prior art tends to erode at the area of joinder of the anode and the nipple or plug with the result that after a short period of time the anode necks down and is eventually consumed in providing protection for the nipple or plug holder. A further disadvantage of the anode fittings of the prior art is that significant corrosion is induced in the nipple or plug supporting the anode with the result that leakage forms at the point where the anode fitting is inserted in the water tank. Premature corroding of the fitting supporting the anode further renders removal of the anode assembly from the water heater difficult.

BRIEF DESCRIPTION OF THE INVENTION

Briefly described, this invention provides an anode fitting to protect a metallic surface. The fitting comprises a connector member adapted to be secured to the metallic surface in electrical contact therewith. A tubular intermediate member is secured to the connector member in electrical contact therewith. An electrode comprised of metal that is higher in the electrochemical series than the metal defining the metallic surface to be protected is secured to the tubular intermediate member in electrical contact therewith. The entire external surface of the tubular intermediate member is covered by an impervious plastic material in order to render the tubular intermediate member impervious to electrolyte while functioning to physically separate and insulate the external surface of the electrode from the external surface of the connector member. In the preferred embodiment of this invention the connector member is comprised of a hollow nipple telescoped about the tubular intermediate member and secured thereto in electrical contact as by rolling the members together thereby producing an inwardly directed rib or corrugation. The electrode is a generally cylindrical member and in one embodiment includes a core wire adapted to be fused or spot welded to an internal projection defined in the tubular intermediate member. The electrode is telescoped within a portion of the tubular intermediate member and is operatively connected thereto as by rolling the tubular intermediate member onto the electrode. An insulating sleeve is disposed between the electrode and the tubular intermediate member to prevent electrical contact at the joint, establish a seal at the joint and insure a tight mechanical joining of the members. When it is desired to use the fitting of this invention as a combination anode and water outlet for a water heater, or when it is desired to use the fitting in combination with a relief valve, an impervious nonmetallic waterway is defined within the connector member, and the tubular intermediate member. A transverse passageway is defined in the tubular intermediate member to provide for the passage of fluid from the interior

of the water tank to an outlet line or relief valve connected to the connector member. The fluid passageways in the respective connector member and tubular intermediate member are rendered impervious by lining the walls defining the passageways with plastic material.

DESCRIPTION OF THE INVENTION

A more complete description of the invention will now be made with reference to the attached drawings in which:

FIG. 1 is an elevational view partly in section and partly in phantom of one embodiment of the anode fittings of this invention secured to the top wall of a water heater;

FIG. 2 is an exploded view of the several parts comprising one embodiment of the anode fitting of this invention;

FIG. 3 is a sectional view of one embodiment of the anode fitting of this invention;

FIG. 4 is a sectional view of a modification of the connection between the electrode and the tubular intermediate member of the anode fitting of this invention;

FIG. 5 is an elevational view of a further modification of the anode fitting of this invention;

FIG. 6 is an elevational view of a still further modification of the anode fitting of this invention;

FIG. 7 is an elevational view of a still further modification of the anode fitting of this invention;

FIG. 8 is a sectional view of a modification of the connection between the electrode and the tubular intermediate member.

There is shown in FIG. 1 an anode fitting **10** according to this invention received within an opening **12** defined within the top wall **14** of a water heater, heat exchanger, pipeline, hot water tank or the like. A spud **16** is welded or otherwise secured to the top wall **14** so as to overlie the opening **12**. Internal threads **18** in the spud are adapted to cooperate with external threads **20** of the connector member **22** in order to provide support for the anode fitting. In the preferred embodiment, the end of the connector member **22** opposite threads **20** (i.e. the outer end of the connector member **22**) is provided with external threads **24** for attachment of a water line or for alternate purposes to be described more fully hereafter.

The threaded connection between the connector member **22** and the spud **16** of the top wall **14** as shown in FIG. 1 is the commercially acceptable manner of securing a fitting to a water heater. Within the scope of this invention, however, should be considered alternate structures for connecting the connector member **22** to the top wall **14** including weldments, sweat fittings and the like.

In FIG. 3, there is shown a cross sectional view of the preferred embodiment of the anode fitting of this invention. Connector member **22** is defined more specifically as a hollow nipple member including external threads **20** at the inner end thereof and external threads **24** at the outer end thereof. A tubular intermediate member **26** is disposed coaxial with connector member **22** and is partially telescoped within the inner end of connector member **22**. A plastic sleeve **28** is disposed within the tubular intermediate member **26** and extends from a position flush with the outer end of connector member **22** well within the tubular intermediate member **26** to a point below the transverse opening **30** as will be more fully described hereafter. The connector member **22** and the tubular intermediate member **26** are firmly locked together in electrical contact as by rolling these respective members together by means of a die to thus distort or displace the metal of the connector member **22** to thereby produce an inwardly extending annular rib or corrugation **32**. Sleeve **28** is similarly indented as it is disposed in contact with the internal wall of the tubular intermediate member **26**. For a more complete description of the locking means producing the annular rib **32** reference is made to the Jacobson Pat. No. 3,093,161.

A similar indentation or annular rib **34** is defined in the tubular intermediate member **26** at a position slightly below the inner end of the connector member **22** for a purpose to be described more fully hereafter.

An electrode **36** including a plastic sleeve **38** positioned about one end thereof is telescoped within the tubular intermediate member **26**. The tubular intermediate member is operatively secured to the electrode as by rolling the members together with a suitable die to thus distort or displace the metal of the tubular intermediate member **26** to thereby form an annular rib **40**. A slight indentation **42** will be made in the external surface of the electrode **36** thus insuring that the electrode **36** will be rigidly retained within the tubular intermediate member **26**. It should be noted that in the embodiment of FIG. 3 the annular rib **40** does not make electrical contact with the external surface of the electrode **36** due to the insulating sleeve **38** disposed therebetween. Sleeve **38** also acts as a seal to prevent entry of fluid into the interior of the tubular intermediate member **26**. Electrical contact between the electrode **36** and the tubular intermediate member **26** is provided by means of a core wire **44** extending from the electrode and fused, spot welded or otherwise suitably secured to annular rib **46** of the tubular intermediate member **26**. Although in the embodiment of FIG. 3 the rib **46** is annular in configuration (being defined by a rolling operation of a die against the external surface of the tubular intermediate member), any suitable connection between core wire **44** and the tubular intermediate member **26** should be considered within the scope of this invention.

In FIG. 2, there is shown an exploded view of the various elements comprising the embodiment of FIG. 3 prior to the assembly thereof. The sleeve member **28** is shown in the form immediately prior to the insertion thereof into the tubular intermediate member **26**. The member **26** and sleeve **28** are thereafter rolled together to define the indentation or annular rib **34**. The connector member **22** is thereafter telescoped over the tubular intermediate member **26** and securely locked thereto in electrical contact after the rolling operation defining the annular rib **32**. Finally the sleeve **38** is disposed about the end of electrode **36** and the electrode **36** is then telescoped into the inner end of the tubular intermediate member **26** where the members are operatively secured together in nonelectrical contact as by rolling an annular rib **40** in the tubular intermediate member **26**. Electrical contact between the electrode **36** and the member **26** is accomplished by fusing or spot welding the end of the core wire **44** to a previously formed annular rib **46**.

Attention is now directed to the exterior surface of the tubular intermediate member **26** wherein a nonmetallic imperivous covering **48** is provided for the purpose of rendering the external surface of the tubular intermediate member **26** impervious to electrolytic fluid thus retarding or prohibiting altogether the corrosion of the tubular intermediate member **26**. To this end, a casting is made about the external surface of the tubular intermediate member **26** thereby defining a generally annular impervious covering **48**. From FIG. 3 it will be noted that covering **48** fills the indentations defined by the annular ribs **34, 46,** and **40**. Covering **48** further extends below the inner end of the tubular intermediate member **26** and comes into contact with the external surface of electrode **36** thereby completely sealing the inner end **27** of the tubular intermediate member **26** from electrolytic fluid. Covering **48** extends upwardly into contact with the connector member **22** where the indentation defined by the rib **34** permits a small amount of material to collect behind the connector member **22** as flash **50**. It has been found that by providing a slight amount of flash **50** behind the inner end of the connector member **22**, a seal is thus defined at the inner end of the connector member **22** preventing entry of electrolytic fluid at the interface of the members

22 and 26, thus preventing localized corrosion at the area of joinder of the connector and the tubular intermediate member. This seal is particularly enhanced by the taper of the pipe threads 20 of connector 22 which taper causes the threads to be squeezed radially inwardly into flash 50.

In the embodiment of FIG. 3 a transverse opening 30 is defined in the tubular intermediate member 26 for the purpose of permitting entry of water from the hot water tank into the passageway 52 (defined within connector member 22 and the tubular intermediate member 26) and thereafter to a suitable discharge pipeline. As shown in FIG. 2, transverse opening 30 extends completely through the tubular intermediate member 26 and sleeve 28. Depending upon the volume of discharge required, one or several transverse openings 30 may be defined in the tubular intermediate member 26 and sleeve 28. At the same time that the covering 48 is cast in place, a core is inserted in the transverse opening 30 in order to permit a small amount of plastic material to flow about the wall defining the opening 30 thus providing overlapping insulation 54 to cover the metallic walls defining the transverse opening 30. Thus the tubular intermediate member is rendered completely impervious to electrolytic action. To complete insulation of the interior of the tubular intermediate member 26 a casting 56 of plastic material is made which comes into contact with both sleeve 38 and sleeve 28. Casting 56 completely covers core wire 44 and the spot welded connection of the core wire and the annular rib 46. aCsting 56 and sleeve 27 thus cooperate to define an impervious interior passageway within the tubular intermediate member 26 and the connector member 22 providing for the flow of fluid from the water tank.

Several significant features of the embodiment of the anode fitting as shown in FIG. 3 should be emphasized at this time. Contrary to the teaching of most of the prior art, the electrode 36 is not connected directly to the connector member 22. Rather, a tubular intermediate member 26 is disposed between the connector member 22 and the electrode 36. In the embodiment of FIG. 3, the tubular intermediate member 26 serves two important functions:

(1) The tubular intermediate member 26 physically separates and insulates the external surface of the electrode 36 from the external surface of the connector member 22. This separation is enhanced by an impervious covering 48 rendering the external surface of the tubular intermediate member 26 impervious to electrolytic action. Other elements of the fitting are similarly rendered impervious to electrolytic action. The electrical connection between the electrode 36 and the connector member 22 is accomplished entirely out of contact with the electrolytic solution of the water tank. The core wire 44 and the spot weld connection at annular rib 46 are completely sealed within casting 56. The joining of the connector member 22 and the tubular intermediate member 26 at annular rib 32 is well above the liquid level of the water within the water heater. The entire connector member 22 is, in fact, disposed substantially above the liquid level of the water in the water heater. Furthermore, flash 50 serves to seal the interface of the members 22 and 26. The internal passageway 52 is rendered impervious to electrolytic action through the cooperation of the sleeve 28 and the casting 56.

(2) The tubular intermediate member 26 serves as a convenient conduit for the flow of fluid from the water heater in the event that it is desired to utilize the anode fitting of this invention in combination with either an outlet for a water heater or a relief valve or for both functions.

It should be emphasized that whereas the embodiment of FIG. 3 is directed to a combination anode fitting and water outlet that this invention in its broadest form is directed to an anode fitting wherein a tubular intermediate member is utilized to substantially separate the electrode from the water heater connector member, the external surface of the tubular intermediate member including an impervious covering to thus prevent the intermediate member from being acted upon by electrolytic fluids. While it is considered convenient to utilize the tubular intermediate member as a fluid passageway as is shown in FIG. 3, this invention should not be considered limited to a fluid passageway in combination with an anode fitting.

The choice of material of the various elements comprising the anode fitting of this invention may vary depending upon particular requirements. Since water heaters, water tanks and pipelines are usually constructed of ferrous metal, the electrode material may be selected from a group including but not limited to more active electrochemical metals such as magnesium, aluminum, and zinc. Similarly, core wire 44, if present, may be manufactured of several metals with steel being preferred. The tubular intermediate member 26 of the preferred embodiment is fabricated from steel although other metals may be used. Similarly, the connector member 22 may be fabricated from one of several metals with steel being preferred. The particular choice of material in each case will depend upon many factors including the characteristic of the metal to be protected. Since water tanks and water heaters are generally fabricated from steel sheet, it is preferred that the connector member 22, tubular intermediate member 26 and core wire 44 be similarly fabricated from steel. The sleeve 28, sleeve 38, covering 48 and casting 56 may be fabricated from any suitable impervious material such as polypropylene. In the preferred embodiment polypropylene compound No. 6652 of Hercules, Incorporated is used. This compound tends to shrink inwardly when applied as an external covering to thus enhance sealing of the metal surfaces against electrolytic fluids. Other materials such as epoxy resins, Bakelite, or formaldehyde compounds may be used.

MODIFICATIONS AND EXTENSIONS OF THE INVENTION

Several modifications and extensions of the invention will now be described with reference to FIGS. 4, 5, 6, 7 and 8. Where possible similar reference characters will be used as have previously been used in connection with the embodiment of FIGS. 1, 2 and 3.

In FIG. 4, there is shown an alternate embodiment of the anode fitting of this invention wherein the electrode 36 is secured within the tubular intermediate member 26 in direct electrical contact therewith. The sleeve 38 of FIG. 3 has been eliminated in the embodiment of FIG. 4 and the annular rib 40 is rolled into direct engagement with the external surface of the electrode 36 to firmly lock these members together in physical and electrical contact. The embodiment of FIG. 4 should be considered a logical extension of this invention where it is desired to utilize an electrode without a core wire. In the embodiment of FIG. 4 the casting 56 completely covers the upper end of the electrode 36 including the top wall and the side wall above the area of contact of the tubular intermediate member 26 and the electrode. Similarly, the impervious covering 48 extends around the bottommost portion of the tubular intermediate member 26 and a small portion thereof will extend between the tubular intermediate member and the electrode filling the annular space immediately below the area of contact of the annular rib 40 and the electrode. While the electrode-tubular intermediate member connection of FIGS. 3 and 4 may appear to be similar, it should be emphasized that in FIG. 3 the annular rib 40 does not contact the external surface of the electrode 36 whereas in FIG. 4 a direct electrical contact of the annular rib is made with the external surface of the electrode. The particular choice as to the mode of connection of the electrode and the tubular intermediate member will depend upon many factors including the selection of an electrode with or

without a core wire. The core wire **44** of FIG. 3 has the advantage of providing structural support for the electrode as advanced corrosion of the electrode takes place.

Other structures for connecting the electrode to the tubular intermediate member well known to those skilled in the art should equally be considered within the scope of this invention. For instance, the electrode could be screw threadedly received within the tubular intermediate member or locked in place as by use of a bayonet joint. Various fastening elements such as rivets might be considered desirable for securing the electrode within the tubular intermediate member.

In FIG. 8 a modification of FIG. 4 is shown wherein screw threads **65** have been provided on the external surface of electrode **36** in order to provide further holding strength for the electrode while encased in the nonmetallic impervious casting **56** and covering **48**. In addition, one or more transverse openings **67** may be provided in the electrode such that casting **56** may flow into the electrode to firmly encase the electrode. Within the scope of this invention should be considered other structures well known to those skilled in the art to enhance the holding strength of the electrode in the tubular intermediate member.

Whatever the mode of connection of the electrode and the tubular intermediate member it is considered desirable to extend the impervious covering **48** around the bottommost portion of the tubular intermediate member into contact with the electrode in order to preclude the entry of electrolyte into the joint area.

The versatility of the anode fitting of this invention will now be described with reference to FIGS. 5, 6 and 7. By way of background it should be pointed out that a water heater manufacturer will usually provide three (3) tapped openings in the top wall of the water heater. One of the openings will provide for the cold water inlet through a dip tube, another opening will provide for a hot water outlet and a third opening has been customarily used for an anode fitting. With the advent of revised safety codes, most water heaters sold commercially must also include a temperature and pressure relief valve. It is not uncommon in prior art water heater designs to thus provide a fourth opening in the top wall of the water heater to receive a temperature and pressure relief valve. The anode fitting of this invention makes it possible to eliminate one or more fittings from the top wall of the water heater and thus eliminate one or more openings in the top wall. The elimination of fittings serves to reduce the areas of greatest corrosion in the tank since many fittings are fabricated of dissimilar metals which increase corrosion.

The anode fitting as shown in FIG. 3 combines the electrode with a hot water outlet. Thus by connecting a hot water discharge line to the connector member **22** at the external threads **24** it is possible to completely eliminate the necessity for a separate anode fitting and a hot water outlet.

In the embodiment of FIG. 6, a pressure and temperature relief valve **58** has been combined with the anode fitting as by disposing the end **60** of the valve **58** into sleeve **59**. Sleeve **59** is, in turn, secured to connector member **22**. An overflow line **61** is provided at valve **58**. In the embodiment of FIG. 6, the transverse opening **30** and passageway **52** function to place the sensing elements of the relief valve **58** in communication with the water within the tank to thus provide relief in the event of overheating of the tank. In the embodiment as shown in FIG. 6, it is contemplated that a separate cold water inlet and hot water outlet will be provided in the water heater.

Depending upon plumbing code requirements, it may be possible to combine the electrode, hot water outlet, and temperature and pressure relief valve in a single anode fitting. Such a combination is shown in FIG. 7 wherein the temperature and pressure relief valve **58** is shown interconnected into the hot water discharge line **62** by means of a tee fitting **63**. Specific code requirements, however, may require a minimum distance between the sensing elements of the temperature and pressure relief valve and the water level of the tank or may even require that the sensing elements be located in the water itself. Thus, the sensing elements of the valve **58** of the embodiment of FIG. 7 may be lowered into proximity with the water level of the tank through tee **63** and the connector member **22**.

As a practical matter some water heaters may be sold without the various accessories in the top wall thereof such as relief valves, nipples, etc. It is virtually impossible to manufacture a water heater to be sold nationally that will meet all of the various local codes. For this reason, it may be desirable to manufacture and sell the anode fitting of this invention with a cover member. One form of the cover member is shown in the embodiment of FIG. 5. Cap **64** is screw threadedly received over the threads **24** of the connector member **22**. In the event that the plumber installing the water heater desires to use the anode fitting of this invention as an anode, the assembly of FIG. 5 including the cap **64** is simply screw threadedly advanced into the water heater. In the event that it may be desirable to combine the hot water outlet with the electrode, the cap **64** of FIG. 5 may be removed and the plumber may then connect a suitable hot water discharge line to the connector member **22**. A temperature and pressure relief valve may be inserted in the hot water discharge line as is shown in FIG. 7. In the event that the plumber simply desires to combine the electrode with a temperature and pressure relief valve, said valve may be secured directly to the connector member **22** in a manner as shown in FIG. 6. The relief valve is another form of the cover member for the connector member **22**.

SUMMARY OF THE INVENTION

The anode fitting of this invention has been provided to overcome many of the problems presented by prior art anode fittings. The structure of the anode fitting of this invention provides for complete isolation of the electrode material from the connector member supporting the electrode in the water heater. With the exception of an electrical contact between the members, the electrode is otherwise insulated from the connector member in the preferred configuration. Thus, localized interaction between the electrode and the connector member characteristic of prior art anode fittings has been eliminated. Through the medium of a tubular intermediate member the external surface of which is rendered impervious to electrolytic fluid, the electrode itself is the only element of the fitting substantially emersed in electrolytic fluid. The connection between the electrode and the tubular intermediate member is itself completely encased with an impervious coating to prevent localized interaction and corrosion of the tubular intermediate member at this joint. The impervious covering about the external surface of the tubular intermediate member extends to the inner end of the connector member. Provision is made to allow a small amount of insulating material in the form of flash to be deposited between the connector member and the tubular intermediate member to thus preclude the entry of electrolytic fluid into the interface of the members. Local interaction and corrosion of the connector member and the tubular intermediate member is thus prevented. When normally positioned in a water heater, the connector member will be positioned above the water level of the tank. However, it is to be understood that vapors may come into contact with the inner end of the connector member. However, since the connector member itself is directly connected to the top wall of the water heater it is probable that the connector member will be at the same electrode potential as the top wall of the water heater. Thus, it is probable that

Cathodic protection will be afforded the inner end of the connector member in a manner similar to that achieved at the internal wall surface of the water heater.

An impervious waterway is defined within the anode fitting and extends from a transverse opening in the tubular intermediate member and into the connector member. The walls defining this waterway are completely lined with an impervious plastic material to thus protect the tubular intermediate member and the connector member from the corrosive effect of electrolytic fluid. The impervious waterway may or may not be used at the option of the purchaser of the water heater. The waterway may serve as either a hot water outlet for the water heater or may provide communication from the interior of the water heater to the sensitive elements of a temperature and pressure relief valve positioned on the anode fitting. In the event that the impervious waterway is not desired, a cap member may be simply disposed about the anode fitting and the fitting may otherwise be used as an electrode.

For ease of description, the principle of the invention have been set forth in connection with a preferred embodiment and several modifications thereof. It is not my intention that the illustrated embodiments nor the terminology employed in describing them be limiting inasmuch as variations may be made without departing from the spirit of the invention. Rather I desire to be restricted only by the scope of the appended claims.

The invention claimed is:

1. An anode fitting for a water heater or the like comprising:

a connector member adapted to be secured to a wall of such water heater in electrical contact therewith and having means at its outer end for the attachment of a water line;

a first fluid passageway in said connector member;

an intermediate member secured to said connector member in electrical contact therewith;

a second fluid passageway in said intermediate member in communication with said first fluid passageway;

an electrode secured to said intermediate member in electrical contact therewith;

a third fluid passageway providing communication from the exterior surface of said intermediate member to said second fluid passageway;

lining means in said first, second and third passageways rendering said passageway impervious to fluid;

covering means on the exterior surface of said intermediate member rendering said intermediate member impervious to fluid.

2. The invention of claim **1** in which said connector member is further defined as an externally threaded hollow nipple the inner end of which is adapted to be operatively secured to the wall of such water heater in communication with an opening in such wall.

3. The invention of claim **2** in which said first fluid passageway is defined by the interior wall of said connector member and said lining means therein is defined by a plastic sleeve.

4. The invention of claim **2** in which said intermediate member is a tubular member coaxially disposed with respect to said connector member.

5. The invention of claim **4** in which said intermediate member and said connector member are telescoped and secured together in electrical contact by means of an inwardly extending annular rib of said connector member contacting said intermediate member.

6. The invention of claim **1** in which said intermediate member is further defined as a tubular member and said electrode is further defined by an elongated cylindrical member telescoped into said intermediate member and secured in electrical contact therewith by means of an annular rib projecting from said tubular intermediate member and contacting said electrode.

7. The invention of claim **1** in which said intermediate member is further defined as a tubular member and said electrode is further defined as an elongated cylindrical member telescoped into said intermediate member and secured to said intermediate member by means of an annular rib projecting from said tubular intermediate member;

insulating means disposed between said electrode and said rib of said intermediate member to prevent electrical contact therebetween;

a core wire extending from said electrode and secured to an inner wall of said intermediate member in electrical contact therewith.

8. The invention of claim **1** in which an inwardly extending annular rib is provided in said intermediate member adjacent the inner end of said connector member and said covering means fills the indentation in the external surface of said intermediate member defined by said inwardly extending annular rib and extends between said connector member and said intermediate member a slight distance in the form of flash to prevent leakage and corrosion at the joint area between the two members.

9. An anode fitting for protecting a metallic surface such as is found in a water heater or the like from corrosion induced by a liquid, said fitting comprising;

a connector member adapted to be secured to such metallic surface in electrical contact therewith;

means to isolate said connector member from direct contact with such liquid;

said connector member being defined by a hollow nipple having an inner end adapted to be operatively secured to such metallic surface and in communication with an opening in such metallic surface and an outer end having a cover member thereon;

a coaxial tubular intermediate member defined by a hollow sleeve having one end disposed within said connector member with the other end extending from said connector member, said tubular intermediate member secured to said connector member in electrical contact therewith;

a coaxial electrode comprised of a metal that is higher in the electrochemical series than the metal defining such metallic surface, said electrode having one end disposed within said tubular intermediate member and axially spaced from the inner end of said connector member;

means to secure said electrode to said tubular intermediate member in electrical contact therewith;

impervious covering means on the portion of the external surface of said tubular intermediate member that is not disposed within said connector member;

impervious seal means at the area of joinder of said electrode and said tubular intermediate member preventing entry of such liquid into the interior of said tubular intermediate member;

whereby said tubular intermediate member is impervious to such liquid and functions to axially separate said electrode which is immersed in such liquid from said connector member which is isolated from such liquid.

10. The invention of claim **9** in which said cover member is in the form of a relief valve secured to said connector member at said outer end so as to be in communication with such metallic surface by means of a passage defined by the internal wall of said connector member and the internal wall of said tubular intermediate member.

11. The invention of claim **10** in which said relief valve is further defined as a pressure and temperature sensitive relief valve.

12. The invention of claim **9** in which said electrode is defined by an elongated cylindrical member with said tubular intermediate member being secured to said electrode by means of a rib of said tubular intermediate member in contact with said electrode.

13. The invention of claim 9 in which said electrode is defined by an elongated cylindrical member with said tubular intermediate member being operatively secured to said electrode by means of a rib of said tubular intermediate member;

insulating means disposed between said electrode and said rib of said tubular intermediate member;

a core wire extending from said electrode and secured to said tubular intermediate member in electrical contact therewith.

14. The invention of claim 13 in which an internal projection is defined in said inner wall of said tubular intermediate member and said core wire is fused to said internal projection.

References Cited

UNITED STATES PATENTS

2,486,936	11/1949	Fergus	204—197
2,710,833	6/1955	Craver	204—197
2,329,961	9/1943	Walker	204—196
2,568,594	9/1951	Robinson	204—197
2,652,358	9/1953	McFerran	204—197
2,808,373	10/1957	Andrus	204—197

TA HSUNG TUNG, Primary Examiner

U.S. Cl. X.R.

174—75; 204—286, 297