Oct. 25, 1955 M. F. DUERKOB 2,721,917

ELECTRIC LAMP INTENSITY CONTROL

Filed June 5, 1953

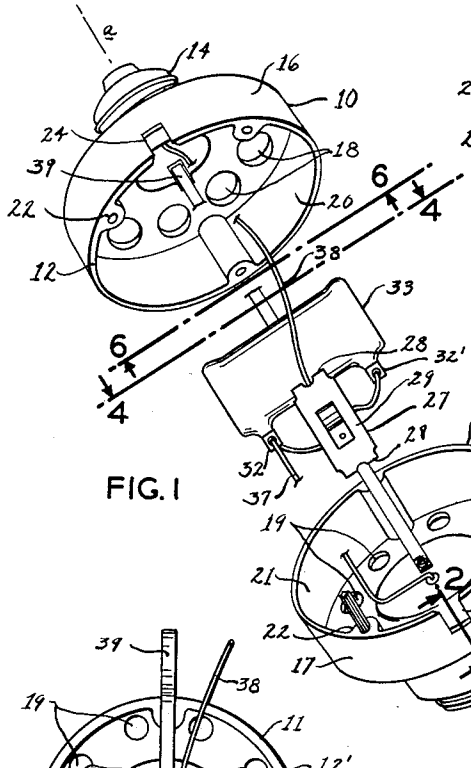

FIG. 1

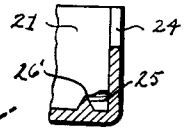

FIG. 2

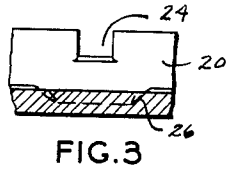

FIG. 3

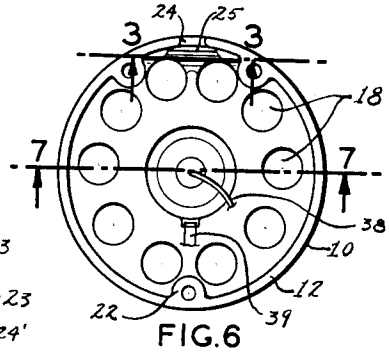

FIG. 6

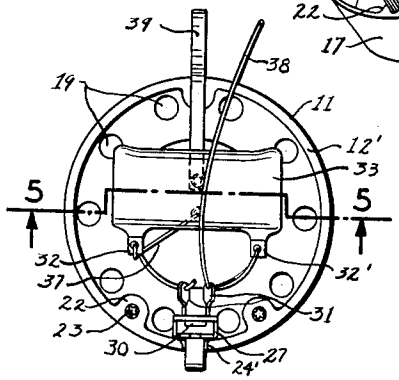

FIG. 4

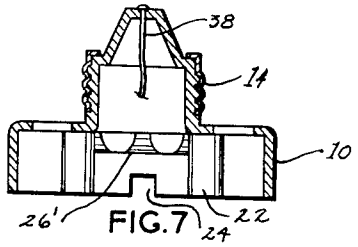

FIG. 7

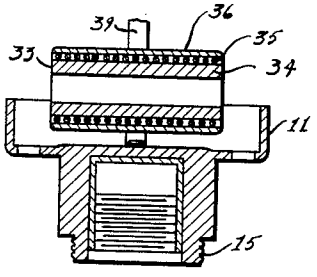

FIG. 5

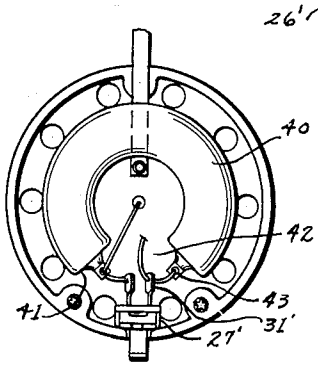

FIG. 8

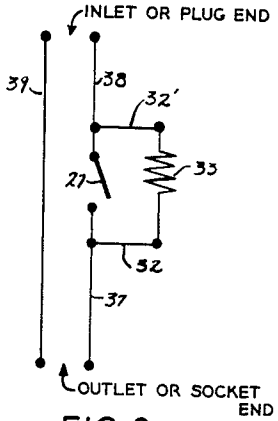

FIG. 9

INVENTOR
MANFRED F. DUERKOB
BY Jerome A. Gross
ATTORNEY

United States Patent Office 2,721,917
Patented Oct. 25, 1955

2,721,917

ELECTRIC LAMP INTENSITY CONTROL

Manfred F. Duerkob, St. Louis, Mo.

Application June 5, 1953, Serial No. 359,803
15 Claims. (Cl. 201—49)

This invention relates to electric lamp intensity controls, and particularly to controls intended for the reduction of intensity of electric lamps of a standard wattage in event of air raids.

It has been found that even during night air raids, it is not necessary to extinguish all illumination. However, in order to insure the reduction of illumination to the extent necessary to avoid detection by raiding aircraft, no variation is permissible. Hence, reduction to a standard pre-determined intensity should take place in a single controlled step, and not by the use of variable dimmers.

The variable dimmers used heretofore have proved deficient in resistance and heat-dissipation characteristics to dissipate the heat developed in reducing the intensity of a 60-watt electric lamp to the necessarily low light output required for military and civil defense uses during such air raids. Also, no control heretofore devised has had sufficient shock resistance to withstand impacts encountered in handling during military operations. The delivery to defense zones by parachuted containers, dropping to concrete floors, and other rough handling which may be encountered in such use, require a ruggedness inconsistent with the utilization of efficient, relatively fragile types of resistors which from the electrical standpoint are best suited for the purpose.

The principal purpose of the present invention is to provide a simple, rugged, single-step intensity control for electric lamps adapted to reduce the light intensity of a standard bulb of 60-watts, for example, to the low intensity permissible for use during night raids by hostile aircraft. Supplementary objectives to this purpose are: to utilize in such a rugged intensity control a relatively fragile type of resistor, such as the vitreous enamel coated type; to provide semi-resilient wire leads to such resistor to serve as a shock-resistant mounting for it; to provide a high impact-resistant ventilated shell housing for the resistor and switch; to incorporate in the shell housing simple means for retaining the switch; and to connect the switch with semi-resilient leads so as to lessen the manipulative effort required for assembling the elements and permit the switch to align itself correctly in position in the mating edges of the shell housing; and to utilize the housing ventilation and the heat-dissipation characteristics of the lead wires to cool the switch.

In the accompanying drawings (one page):

Figure 1 is an exploded perspective view of an intensity control embodying the present invention.

Figure 2 is an enlarged fragmentary section taken along line 2—2 of Figure 1.

Figure 3 is a similarly enlarged fragmentary section taken along line 3—3 of Figure 6.

Figure 4 is a plan view as seen from a plane indicated by line 4—4 in Figure 1.

Figure 5 is a vertical section taken along line 5—5 of Figure 4.

Figure 6 is a bottom plan view taken along the plane indicated by line 6—6 of Figure 1.

Figure 7 is a vertical section taken along line 7—7 of Figure 6.

Figure 8 is a view corresponding to Figure 4 showing an alternate embodiment of the present invention.

Figure 9 is an electrical diagram of the embodiment shown in Figure 1.

Referring to Figure 1, the embodiment of the present invention there shown utilizes an upper cup-like housing shell **10** and a lower cup-like housing shell **11** having mating edges **12**, **12'** adapted to be presented against each other on assembly to form a chamber **13**. The housing shells **10** and **11** are circular in cross-section and have a common axis of assembly designated *a—a*. The upper housing shell **10** bears a conventional electrical inlet or plug **14**, centered on the axis of assembly *a—a*; and the lower housing shell **11** bears a conventional electrical outlet or socket **15**, similarly centered. The diameter of the housing shells **10**, **11** is substantially greater than the diameter of either the plug **14** or the socket **15**, the housing shells **10** and **11** being flared annularly outward beyond the plug **14** and socket **15** to form substantially flat upper and lower housing walls **16** and **17**. These are penetrated by annularly arranged ventilating apertures numbered **18** in the upper housing shell **10** and **19** in the lower housing shell **11**. Such ventilating apertures **18**, **19** are preferably located in angular registration with each other so as to permit the free movement of circulating air through the chamber enclosed by the housing shells **10** and **11**.

From the substantially flat upper housing wall **16** and lower housing wall **17** extend the cylindrical side walls **20** and **21**, respectively, whose mating edges **12**, **12'** have heretofore been referred to. Molded on the inner surfaces of the side walls **20**, **21** are a plurality of assembly pin sockets **22**, aligned parallel to the assembly axis designated *a—a*, those in the upper side wall **20** being in radial and angular registration with the corresponding assembly pin sockets **22** of the lower side wall **21**. Assembly is by use of conventional assembly pins **23**, driven into the pin sockets **22** of one of the housing shells (here the lower shell **11**) before assembly, onto which the other shell is driven on assembly.

The housing shell side walls **20**, **21** contain switch lever notches **24**, **24'** molded into the mating edges **12**, **12'** and aligned on assembly so as to be in registration with each other. Inwardly adjacent the switch lever notches **24**, **24'**, switch-engaging recesses **25** are molded into the housing shells **10** and **11** substantially at the intersections of their side walls **20**, **21** and flat walls **16**, **17**. The switch engaging recesses **25** have tapered ends **26**, as shown in Figure 3, adapted to center the switch **27** (hereinafter described) upon the axial assembly of the housing shells **10**, **11**; and have tapered back flanges **26'**, as shown in Figure 2, adapted to press such switch outward and closely adjacent the inner side of the side walls **20**, **21**. Both the tapered back flanges **26'** and the tapered ends **26** of the switch engaging recesses **25** taper outward toward the center of the chamber **13**.

Adapted to be held within the said recesses **25** on assembly, are the upper and lower blade ends **28** of the channel-like frame **29** of a simple electrical switch **27**. It may be noted in Figure 4 that the channel flanges of the switch **27** are immediately adjacent two of the ventilating apertures **19**. The switch **27** is provided with a small air passage **30** which aids in cooling, by permitting flow of cooling air not only alongside the switch frame **29** but actually through the switch **27**.

Extending inward from the switch **27** are switch termi-

nals 31 to which are soldered resistor-supporting conductors 32, 32', leading to an electrical resistor 33. Such a resistor must necessarily have a high capacity, sufficient to reduce the intensity of a 60-watt lamp to that small level of illumination which may be acceptable to military authorities so that the illumination therefrom is not visible to flying aircraft. For such purposes the electrical resistor 33 employed in the embodiments shown comprises a steatite tube 34 as shown in Figure 5, bearing a wound wire resistance 35, coated externally with a vitreous enamel coating 36.

The resistor 33, so constructed, is fragile and frangible. Since one of the requirements of a militarily acceptable intensity control is impact resistance, the present invention utilizes a highly impact-resistant melamine molded plastic to form the housing shells 10 and 11. This leaves one of the principal problems met by the present invention, i, e., securing the frangible resistor 33 against the transmission of mechanical shock and impact from the housing 13.

The conductors 32, 32', have been referred to heretofore as resilient (or semi-resilient) and resistor-supporting; and these qualities preferably apply also to the conductor 37, which connects one terminal of the resistor 33 directly to the electrical outlet 15, and also describe the conductor 38 which connects the switch 27 to the electrical inlet 14. An acceptable degree of resiliency to qualify as resilient or semi-resilient, for purpose of this invention, is defined as follows: the said conductors 32, 32', 37 and 38 may yield and take a permanent "set" under the manual forces applied in assembling the intensity control. They shall nevertheless have sufficient strength and rigidity to support the mass of the resistor 33 substantially cantilevered, as shown in Figures 1 and 4, under the acceleration of impact loads, within the elastic bending range. Thus, impact loads are reacted by elastic bending of the conductors 32, 32', 37 and 38. The range of movement of the resistor 33 upon such bending of the conductors 32, 32', 37 and 38 must be so limited that no physical contact will occur between the frangible resistor 33 and the housing 13. Consideration should be given not only to the mechanical properties of the wire utilized, but also to the bending moments to be encountered in each instance and the lengths of wire over which these moments are reacted.

A soft conductor strap 39 connects directly the second terminal of the electrical inlet 14 with the second terminal of the electrical outlet 15. The diagram shown in Figure 9 illustrates the simple hook-up employed.

An alternate embodiment is shown in Figure 8, utilizing a tubular resistor 40 in the shape of a sector of an annulus. The principal advantage of this modified embodiment is to permit a greater flow of cooling air past the wall of the resistor 40. The included angle *b* of the annular sector being greater than 180°, the ends 41 of the resistor 40 will be presented somewhat towards each other, as shown in Figure 8, the space between them being referred to as the resistor annulus gap 42 into which protrude the resistor terminals 43 and the switch terminals 41' of the switch 27'. Inasmuch as the switch 27' is connected in parallel with the resistor 40, this arrangement makes for compactness and use of short conductors whose elastic properties may be readily calculated or determined by experimentation. It is obvious that in order to secure the best shock-mounting characteristics for the frangible resistor 40, not only is the relative rigidity of the several conductors important, but also their lengths; likewise, the mass of the resistor and the arm to its center of gravity. The alternate arrangement shown in Figure 8 makes possible the ready calculation of such factors.

However, the embodiment shown in Figures 1, 4 and 5 has been adequate in all of its tests; the necessary lengths and wire gauges for the conductors 32, 32', 37, 38 to assure proper cushioning and housing clearance of the resistor 33 may be readily determined by simple trial and error.

One of the principal advantages of the present invention lies in the manner of assembly. A sub-assembly is first made up of the resistor 33, the switch 27 and the conductors 32, 32', 37 and 38. This sub-assembly is then secured within the housing shells 10 and 11 merely by soldering the terminal ends of the conductors 37 and 38. The conductor strap 39 is then connected, the assembly pins 23 forced into their pin sockets 22 in one of the housing shells 10, 11, and the housing shells 10, 11 then pressed axially together. As these approach each other, the switch engaging recesses 25 grasp the blade ends 28 of the switch 27 and center the switch. The upper conductor 38 and lower conductor 37 yield simultaneously, so that, the resistor 33 is positioned, cushioned spacedly within the housing shells 10, 11, substantially automatically. Thus the intensity control is well adapted to low cost production.

In operation, the switch 27 is either in circuit-making position, in which the electric bulb will burn at substantially full intensity, or in circuit-breaking position, in which the bulb burns at the predetermined low rate of illumination. The great heat which results from passage of the electrical current through the resistor 33 when the switch 27 is in circuit-breaking position, is dissipated into the cooling air passing directly over the resistor 33 and also into the air passing over and cooling the conductors 32, 32', 37 and 38 and the switch 27. There is no physical contact between the resistor 33 and the housing shells 10, 11 save through these conductors. The housing shells 10, 11 are not heated sufficiently to make them dangerous to touch.

No intensity controls heretofore developed have the capacity of the present control, nor its heat-dissipation characteristics, nor its impact resistance. It has not heretofore been thought possible to use a frangible resistor in an intensity control which must be capable of withstanding a drop from a parachuted container, and the rough handling which may be encountered under emergency conditions such as prevail in areas subject to air raids. The principal features of the present invention, particularly the use of the conductors to mount a resistor cushioned against physical impacts, and to dissipate part of its heat into the air, are thought to be entirely novel.

Other advantages of the present construction will be obvious; and likewise other embodiments of the inventive principles herein disclosed will be apparent to those skilled in the art. Accordingly, the scope of the present invention is not to be deemed limited by the specific features herein illustrated.

What I claim is:

1. An intensity control for electric lamps, comprising a housing incorporating an electrical inlet and an electrical outlet, each having two terminals, a conductor connecting one terminal of the inlet with one terminal of the outlet, a switch, an electrical resistor, and conductors supporting the resistor resiliently within the housing and connecting the resistor and switch in parallel between the second terminal of the inlet and the second terminal of the outlet.

2. An intensity control for electric lamps as provided in claim 1, the resiliency of support of the resistor being provided by elastic bending of the said supporting conductors.

3. An intensity control as described in claim 1, the conductors to the switch supporting it yieldably pending assembly of the housing.

4. An intensity control as described in claim 1, the housing comprising two cup-like shells, one of said shells bearing the electrical inlet and the other bearing the electrical outlet, the shells having mating edges and adapted to be assembled together axially, the shells further having opposed switch-engaging recesses in registration with each other and so spaced apart when the shells are in assembled relationship as to cooperate to hold the switch in fixed position.

5. An intensity control as described in claim 4, the

switch-engaging recess in each shell being tapered so as to center the switch within them upon the axial assembly of the said shells.

6. An intensity control as described in claim 4, the housing having ventilating apertures adjacent the switch-engaging recesses substantially above and below the switch whereby to provide air movement past the switch and the dissipation of heat therefrom into the air.

7. A controller for regulating the current through a lamp, comprising a housing of molded material, openings in walls of said housing for passage of cooling currents of air therethrough, a pair of input terminals mounted in said housing adapted to be electrically connected to a supply line, a pair of output terminals mounted in said housing adapted to hold a lamp in current-receiving relation with said supply line, a conductor making direct electrical connection between one of said input terminals and one of said output terminals, a resistance element in series electrical connection with the other of said input terminals, a switch electrically connected in parallel with said resistance element, said resistance element being substantially free from current flow therethrough when said switch is in closed position, and semi-resilient conductors forming the said series connection and the said parallel connection, said conductors further forming a spring-like mounting for the resistance element within the housing, whereby to guard it against injury from sudden physical shock, said conductors being presented exposed within the housing for ready dissipation of heat from the resistance to such cooling currents of air.

8. An intensity control for electric lamps, comprising a housing incorporating an electrical inlet and an electrical outlet, each having two terminals, a conductor connecting one terminal of the inlet with one terminal of the outlet, a switch, an electrical resistor, and conductors connecting the resistor and switch in parallel between the second terminal of the inlet and the second terminal of the outlet, the said conductors supporting the resistor resiliently within the housing by elastic bending of said conductors, there being no physical contact between the resistor and the housing except the resilient support of said conductors.

9. An intensity control as described in claim 8, the housing being molded of impact-resistant plastic material and the resistor being of frangible construction.

10. An intensity control as described in claim 8, the resistor being coated with vitreous enamel.

11. An intensity control as described in claim 8, the housing having ventilating apertures above and below the resistor and its supporting conductors whereby to provide air movement past the resistor and supporting conductors and the dissipation of heat therefrom into the air.

12. An intensity control for electric lamps, comprising an electrical inlet, an electrical outlet, an electrical resistor, a switch, conductors connecting the resistor and switch in a parallel circuit between the inlet and outlet, and a housing of circular plan section incorporating the inlet and outlet concentrically at its top and bottom, respectively, the housing being of greater radius than the inlet and outlet, together with ventilating apertures in said housing arranged annularly and located outward from the center a greater radial distance than the outer margins of said inlet and outlet, the resistor being supported within said ventilating housing solely by the conductors.

13. An intensity control as described in claim 12, the resistor being tubular and in the shape of a sector of an annulus having its center substantially concentric with the housing.

14. An intensity control as described in claim 13, the annulus sector including an angle greater than 180° and less than 360°.

15. An intensity control as described in claim 14, the ends of the resistor being spaced from each other and forming an annulus gap, and connectors to the switch positioned in said annulus gap.

References Cited in the file of this patent

UNITED STATES PATENTS

749,705 Schofield ---------- Jan. 12, 1904