United States Patent [19]

Wu

[11] **Patent Number: Des. 291,439**

[45] **Date of Patent: ** Aug. 18, 1987**

[54] **TELEPHONE SET**

[76] Inventor: **Richard Wu,** 12/F., No.126, Nan-Kin E. Rd., Sec.4, Taipei, Taiwan

[**] Term: **14 Years**

[21] Appl. No.: **758,995**

[22] Filed: **Jul. 25, 1985**

[52] **U.S. Cl.** **D14/53;** D14/62; D14/57; D14/58

[58] **Field of Search** ..... D14/53, 58, 57, 63; 179/100 R, 179, 100 D, 100 L, 100 C, 101, 103

[56] **References Cited**

U.S. PATENT DOCUMENTS

D. 279,895	7/1985	Menei	D14/53
D. 280,217	8/1985	Tomozawa et al.	D18/7 X
D. 283,711	5/1986	Deura et al.	D18/7 X
D. 286,284	10/1986	Sasaki et al.	D14/53
D. 286,875	11/1986	Cameron	D14/57 X
D. 287,363	12/1986	Klaiber et al.	D14/57 X
D. 287,491	12/1986	Brown et al.	D14/53

OTHER PUBLICATIONS

Barphone S. A. 2 page brochure, Touchtone Model C753-63442.

B. A. Pargh Co. Inc., Cat. ©1983; at p. 32: Panasonic Model KX52010.

B. A. Pargh Co. Inc., Cat. ©1985; Uniden Models at p. 256: EX1050 and TMSIA.

Primary Examiner—Wallace R. Burke
Assistant Examiner—Horace B. Fay
Attorney, Agent, or Firm—Armstrong, Nikaido, Marmelstein & Kubovcik

[57] **CLAIM**

The ornamental design for a telephone set, as shown and described.

DESCRIPTION

FIG. **1** is a front, top and right side perspective view of a telephone set in assembled position showing my new design;

FIGS. **2** and **3** are respectively top and bottom plan views thereof;

FIGS. **4** and **5** are respectively left and right side elevational views thereof;

FIGS. **6** and **7** are respectively front and rear elevational views thereof; and

FIG. **8** is a front, top and right side perspective view of the stand, and a front, top and partial view of the handset placed alongside the stand.

The cord is shown in abbreviated form in FIGS. **2, 4, 5, 6** and **7** for facility of illustration.

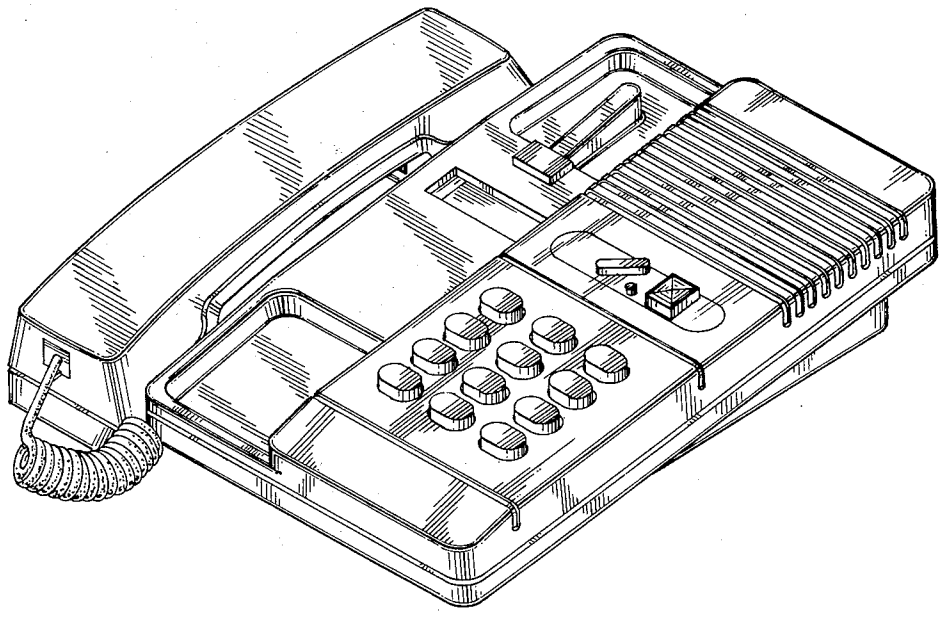

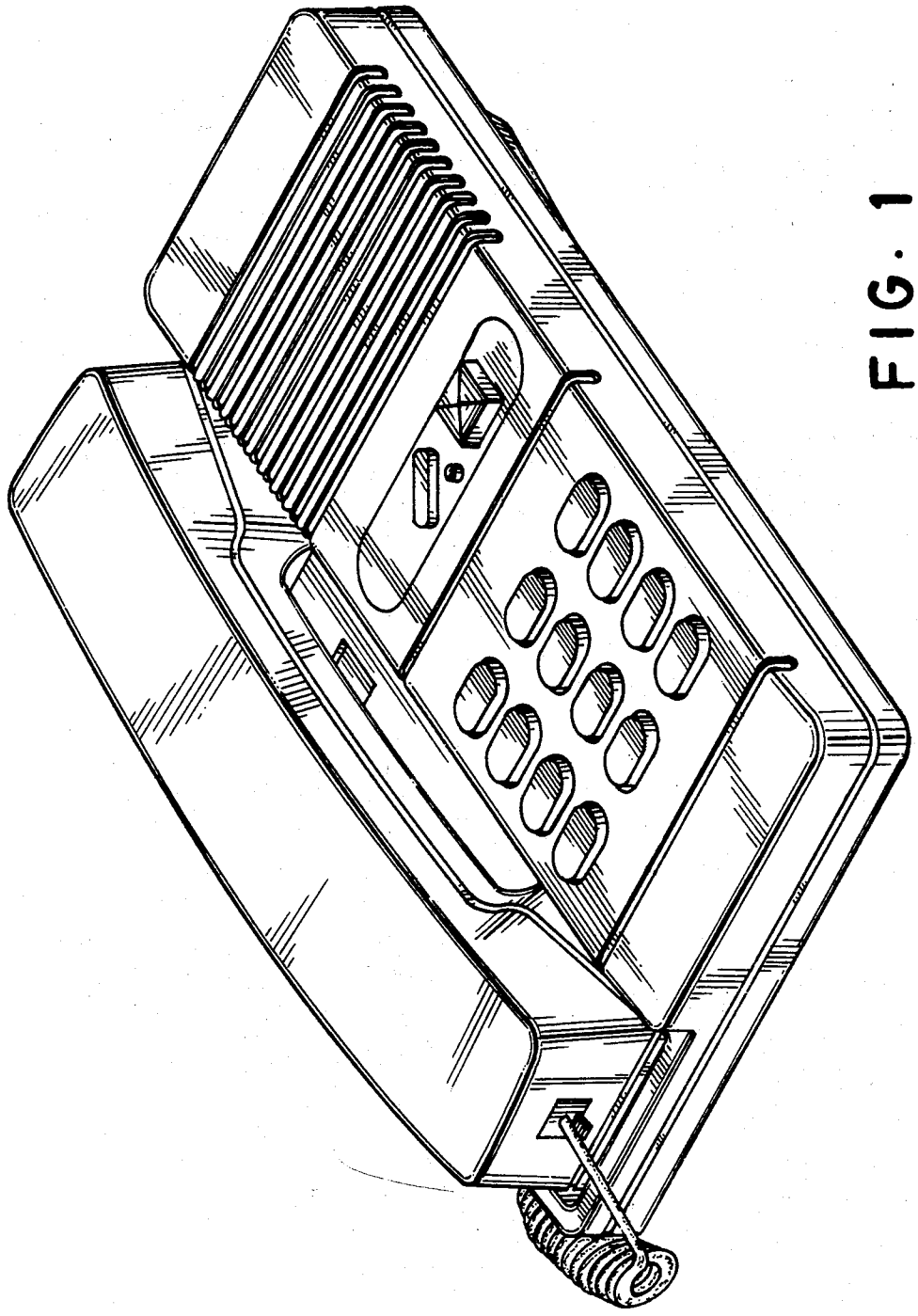

FIG. 1

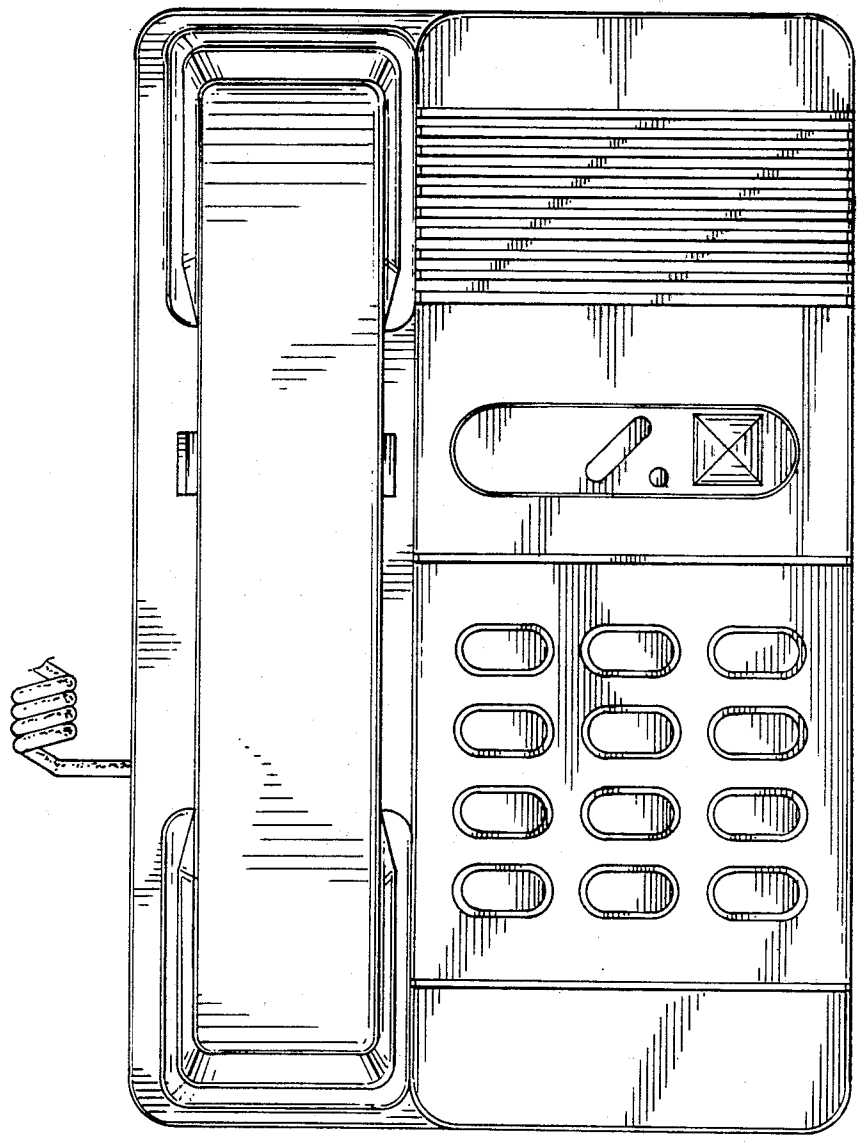

FIG. 2

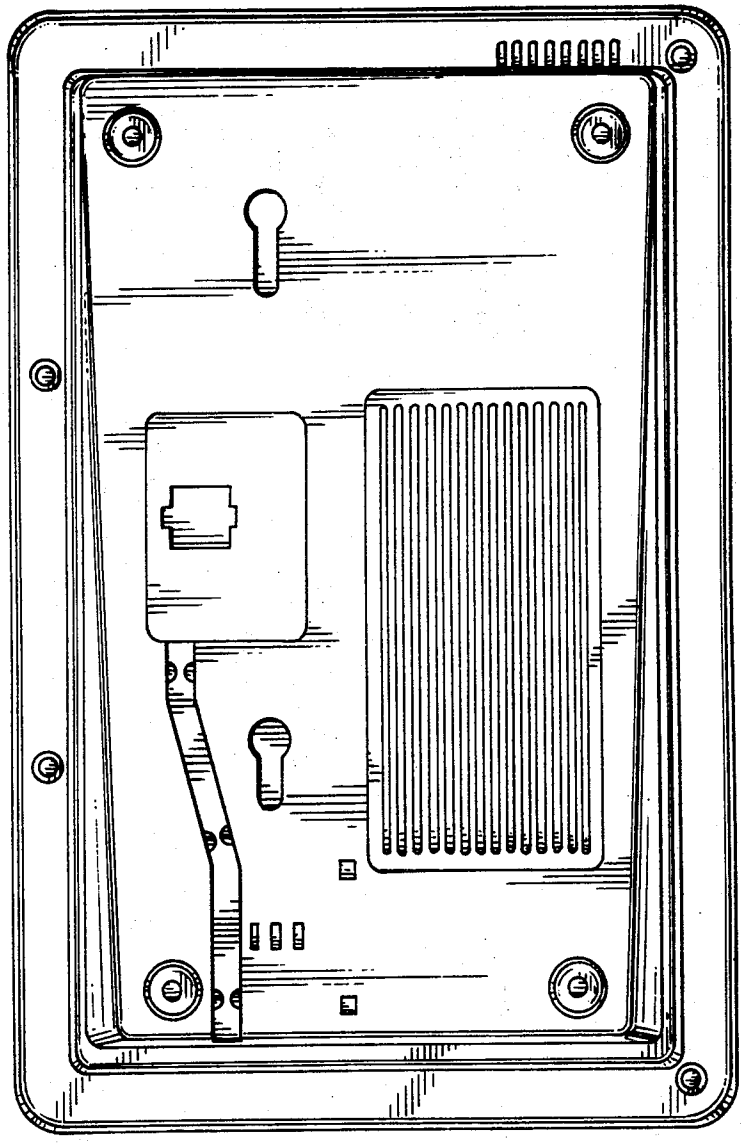

FIG. 3

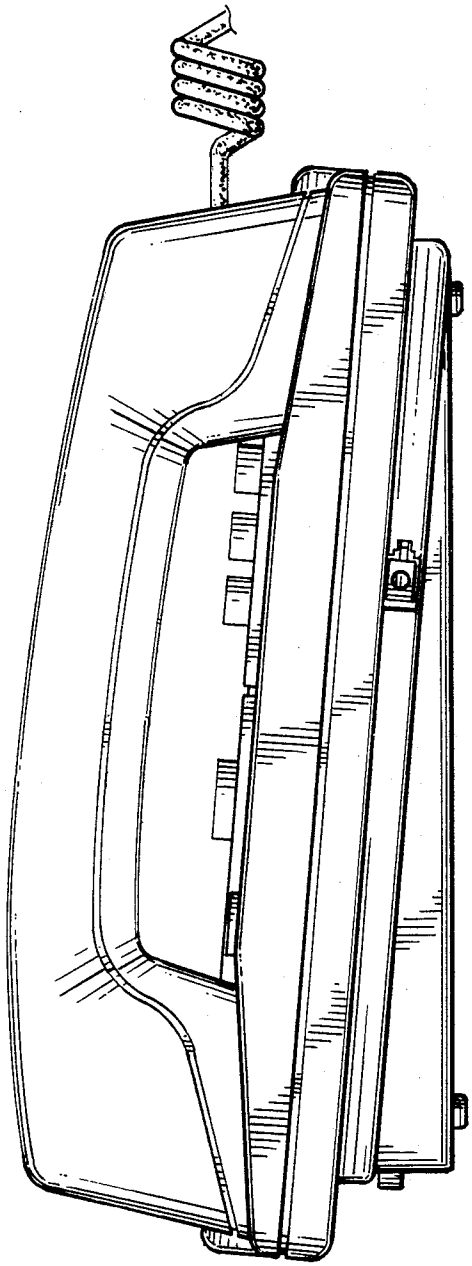

FIG. 4

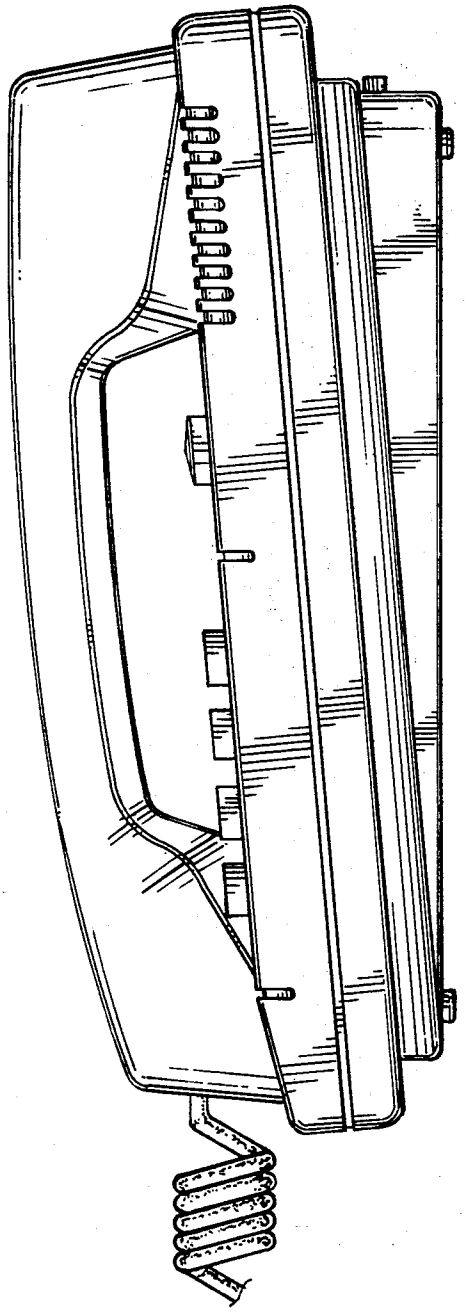

FIG. 5

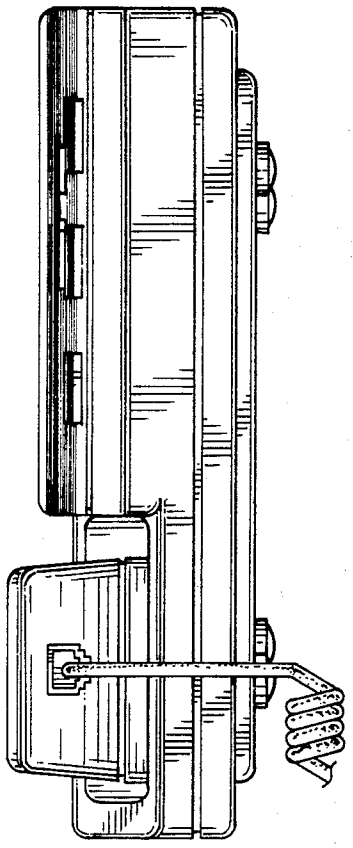

FIG. 6

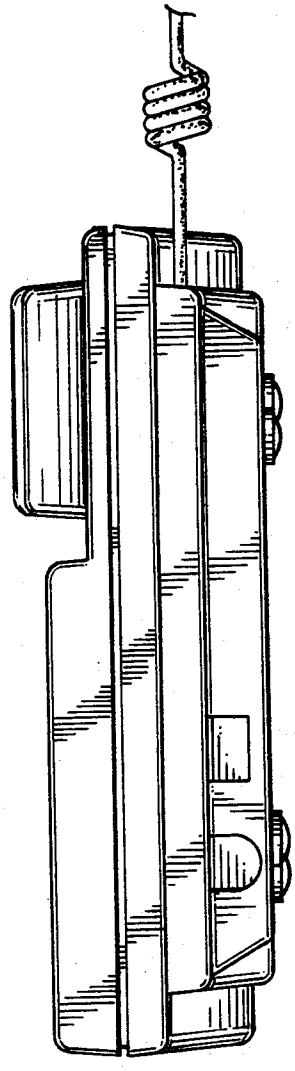

FIG. 7

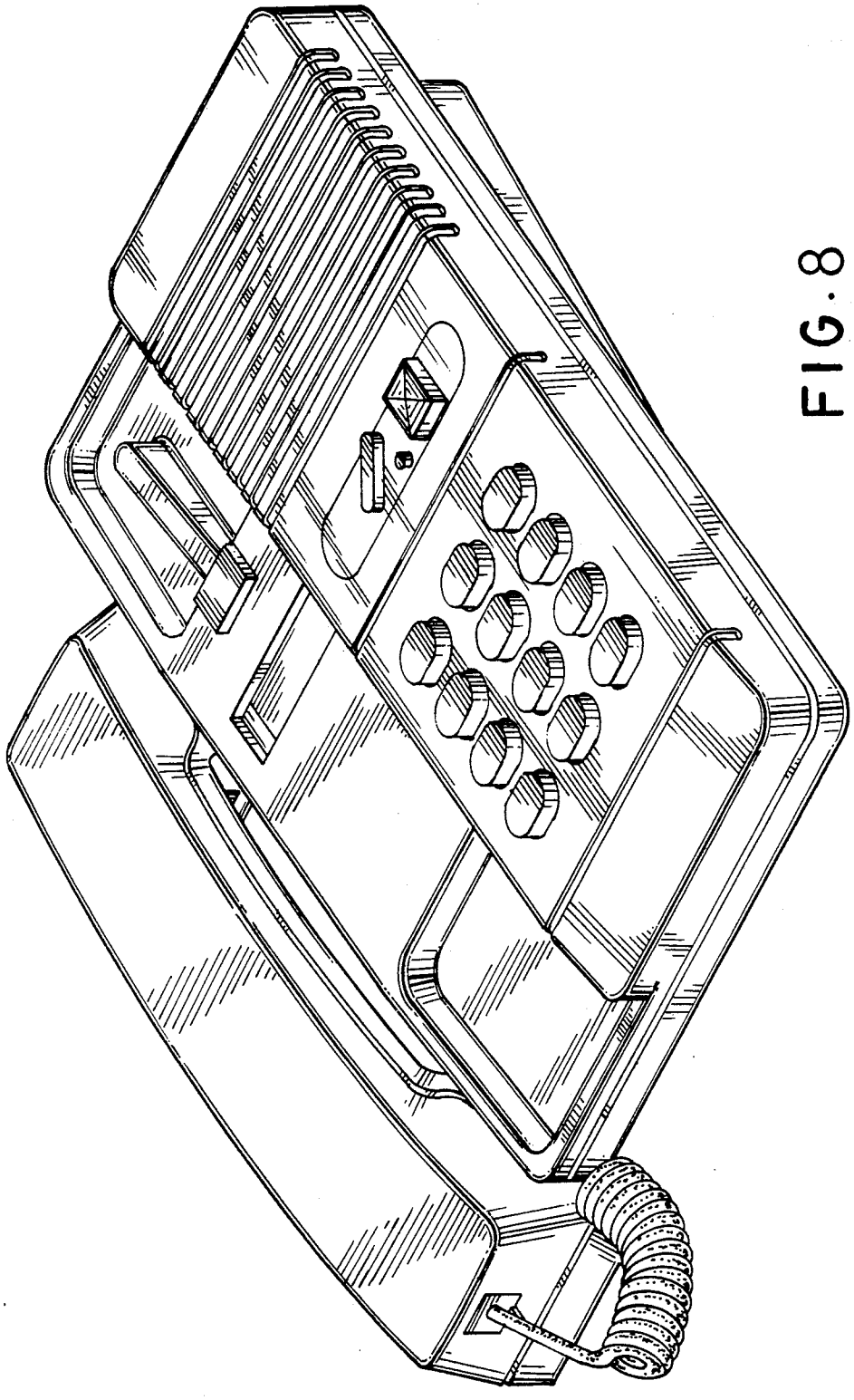

FIG. 8