United States Patent

[11] 3,631,537

[72] Inventors **Richard E. Zibolski**
Milwaukee;
Ronald W. Morters, Wauwatosa, both of Wis.

[21] Appl. No. **5,679**
[22] Filed **Jan. 26, 1970**
[45] Patented **Dec. 28, 1971**
[73] Assignee **Harnischfeger Corporation**
West Milwaukee, Wis.

[54] **CALIBRATION CIRCUIT FOR BOOM CRANE LOAD SAFETY DEVICE**
13 Claims, 4 Drawing Figs.

[52] U.S. Cl. ..... **340/267 C,** 212/40, 340/177 CA
[51] Int. Cl. **B66c 23/90,** G08b 21/00
[50] Field of Search ..... 340/267 C, 282; 212/39, 40

[56] **References Cited**
UNITED STATES PATENTS

2,858,070	10/1958	Scharft	340/267 C
3,079,080	2/1963	Mason	340/267 C
3,489,294	1/1970	Greb et al.	340/267 C
3,505,514	4/1970	Fathauer	340/267 C
3,534,355	10/1970	Fathauer	340/267 C
3,362,022	1/1968	Mork et al.	340/267 C
3,549,876	12/1970	Hamilton	340/267 C

Primary Examiner—Thomas B. Habecker
Assistant Examiner—Glen R. Swann, III
Attorney—James E. Nilles

ABSTRACT: A calibration circuit for determining that a load safety device for a boom crane is operative and properly calibrated. The circuit includes a means for altering the operation of the load safety device so that the weight of the boom itself may be used as a calibrating load.

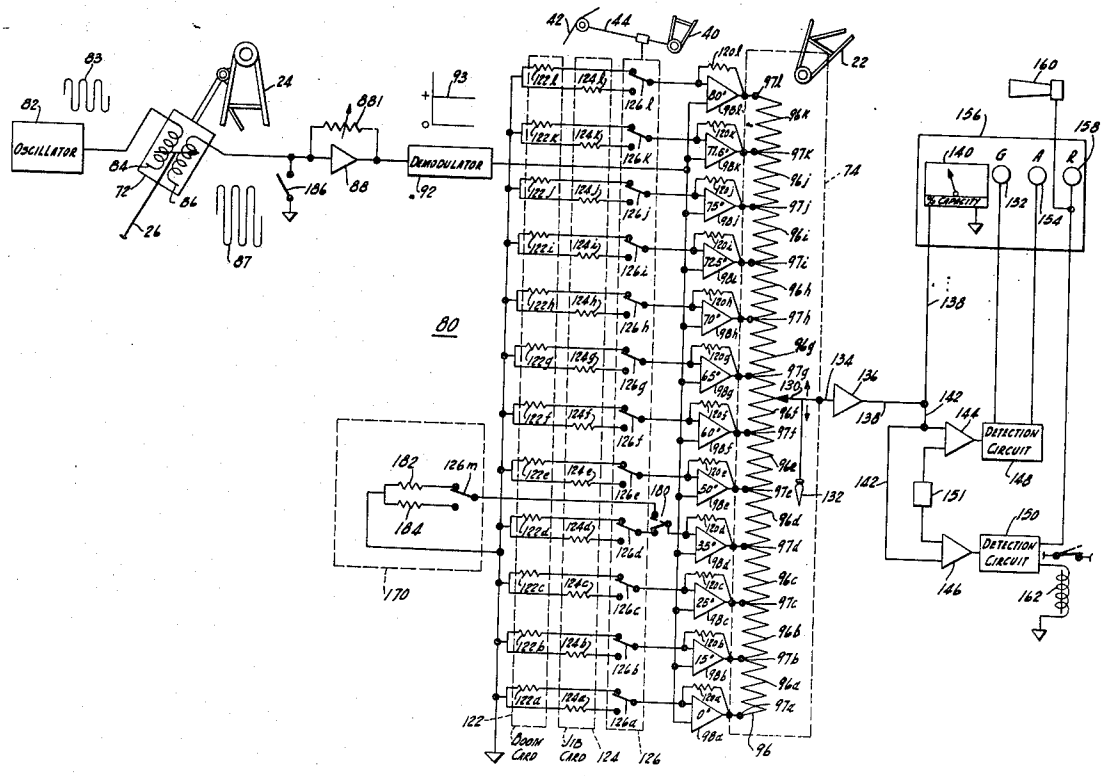

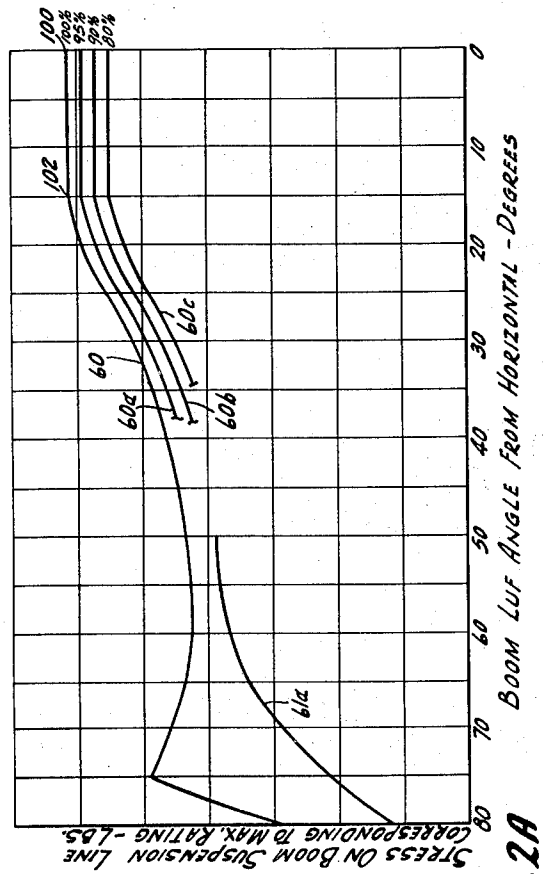

Fig. 2A

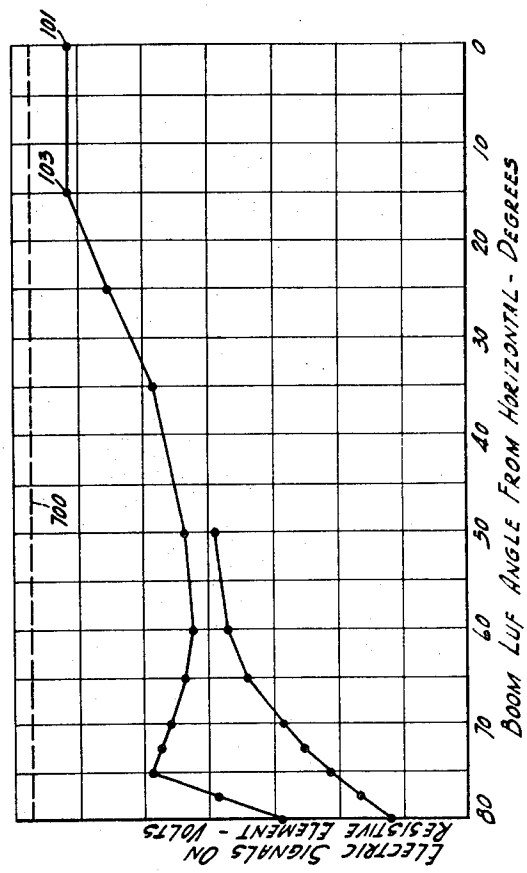

Fig. 2B

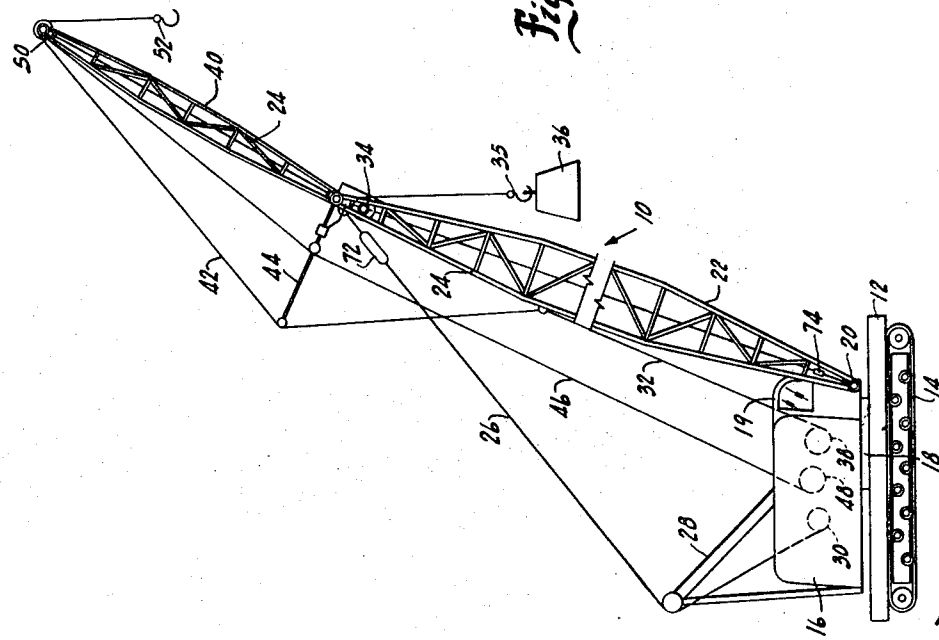

Fig. 1

INVENTORS:
RICHARD E. ZIBOLSKI
RONALD W. MORTERS

BY: James E. Nilles
ATTORNEY

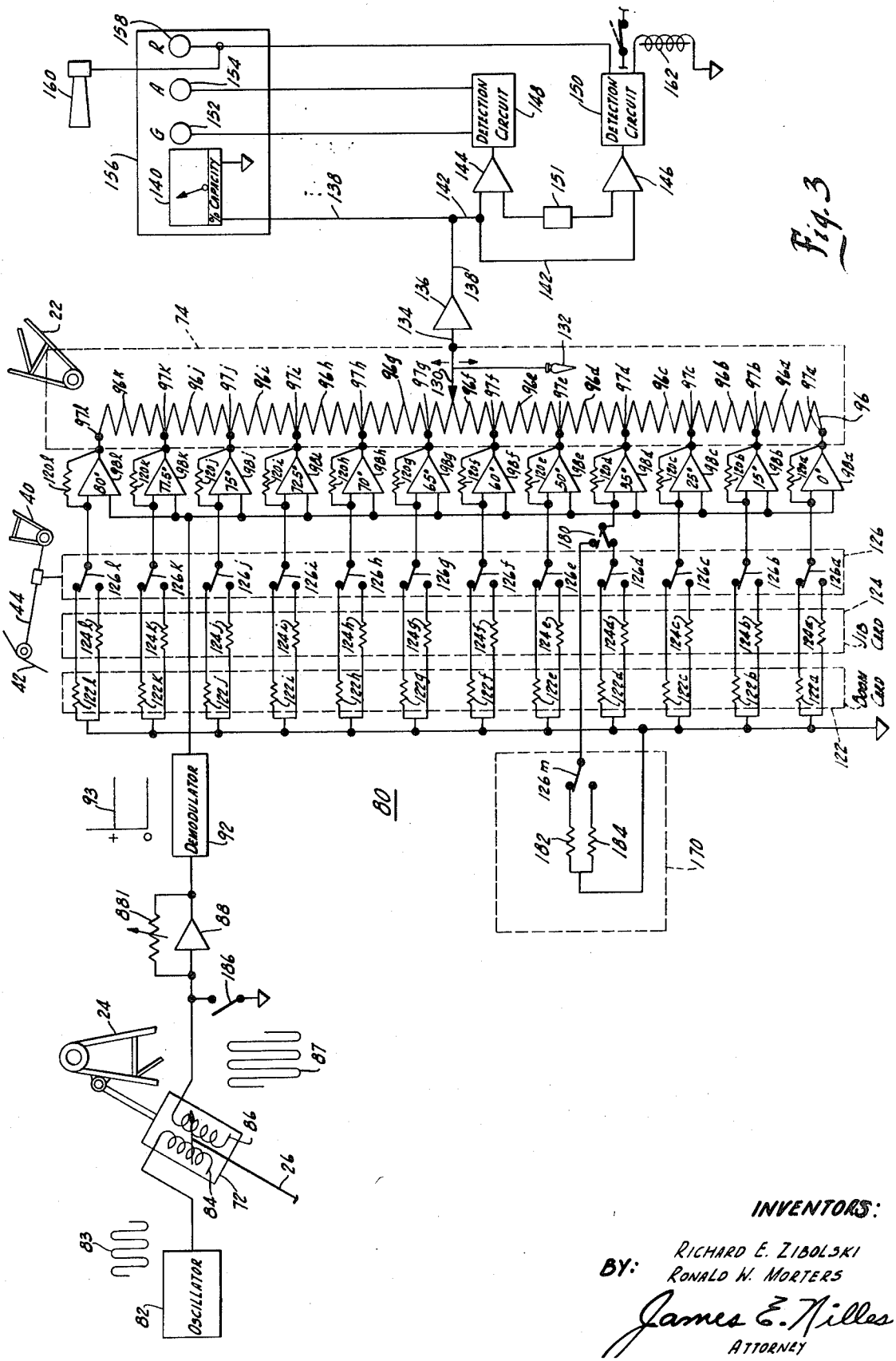
DETECTION CIRCUIT
DETECTION CIRCUIT
% OPACITY
DEMODULATOR
OSCILLATOR
80
INVENTORS:
RICHARD E. ZIBOLSKI
RONALD W. MORTERS
BY:
James E. Nilles
ATTORNEY

Fig. 3

CALIBRATION CIRCUIT FOR BOOM CRANE LOAD SAFETY DEVICE

BACKGROUND OF THE INVENTION

1. Field of the Invention

The present invention relates to a calibration circuit for a load safety device utilizable on a boom crane.

2. Description of the Prior Art

The present invention relates to calibration circuitry which may be incorporated in a device for ascertaining when the load on a boom crane attains the limits of safe operation. The calibration circuitry provides an indication that the load safety device is operative and correctly adjusted for proper operation.

Boom cranes find common usage in erection and other construction work. Typically, the crane is mounted on a tracked or wheeled base to facilitate movement to and from the job site. A crane body including the operator's cab and a power source, such as a diesel engine, for the crane is mounted on the base for rotary movement in a horizontal plane. The boom, generally of skeletal or frame construction, is pivotally mounted at its lower end on the crane body for movement in a vertical plane. Such vertical movement is termed "luffing."

The position of the boom in the vertical plane of movement is controlled by a boom suspension line which runs from the back of the crane body, over a suspension line strut, to the upper end of the boom. By paying out or taking up on the boom suspension line, the position of the boom is adjusted to the desired luff angle. The tackle for raising and lowering the crane load is also attached to the upper end of the boom.

A crane is designed for operation below specified maximum load conditions, termed the rating or capacity of the crane. The rating of a given crane is determined by two factors; the structural strength of the members, such as the boom, and the stability of the crane. When the boom is at angles near vertical, i.e. high luff angles, the rating of the crane is limited by the ability of the boom to resist the compressive forces exerted thereon by the weight of the load. When the boom is at lower luff angles, the limiting factor is the ability of the base of the crane to resist the tipping movement applied to the base by the weight of the crane load acting through a moment arm comprised of the horizontal distance vector of the boom length. The result of the foregoing is a maximum load to which the crane may be subjected for each luff angle.

It is naturally desirable to provide a means of warning the crane operator when he is exceeding the capacity or rating of the crane so as to avoid accidental damage to the crane and injury to the operator or other workmen. For this purpose, load safety devices have been incorporated in cranes to provide such a warning by automatically taking into account the boom luff angle and the load on the boom. When the sum of these two factors reaches the rating of the crane, the device sounds an alarm, shuts down the crane, or takes other corrective action.

The load on the boom may be measured by means of a load cell interposed in the boom suspension line for providing an electric signal corresponding to the tensile forces generated in the cable by the load on the boom. The angle of the boom may be measured by a rheostat mounted on the boom having a wiper affixed to a plumb bob. The load cell and rheostat are connected to electric circuitry which ascertains, by use of the electric signals, when the combination of the boom luff angle and the load exceeds the rating of the crane and initiates the corrective action.

However, like all safety devices, it is imperative to ascertain at all times that such a crane load safety device is operational and that it is operating properly. For this purpose, it is necessary to both insure that the sensory elements and the electric circuitry are operational and that the operation of the device is within the allowance limits of accuracy, i.e. properly calibrated.

It has been necessary in the past to use a load of known magnitude to check the operation of the safety device. However, such check weights generally range from 20,000 to 40,000 lbs. and are awkward and difficult to utilize as well as often being unavailable.

SUMMARY OF THE INVENTION

It is, therefore, the object of the present invention to provide a calibration means for determining whether a crane load rating safety device is functioning properly.

The calibration means is self-contained in the safety device and does not require extra equipment, such as test loads of known weight.

The calibration device is inexpensive in construction and installation, and simple in operation.

The calibration circuit of the present invention utilizes the weight of the unloaded crane boom as a test weight in calibrating the operation of the load safety device. It includes a means for altering the operation of the load safety device so that when the unloaded boom is luffed to a predetermined luff angle, the tension in the boom suspension line is such as to cause the load safety device to indicate 100 percent of crane capacity if the device is functioning correctly and is properly calibrated. The alteration in the operation of the load safety device is obtained by altering the gain of an amplifier incorporated therein.

BRIEF DESCRIPTION OF THE DRAWING

FIG. 1 is a simplified perspective view of a boom crane with which the calibration circuitry of the present invention may be used.

FIG. 2*a* is a graph showing the stress on the boom suspension line under maximum safe load conditions as related to boom luff angle.

FIG. 2*b* is a graph showing the generation of an electrical function in the load safety device corresponding to the graph shown in FIG. 2*a*.

FIG. 3 is a schematic diagram of a crane load safety device showing the calibration circuitry of the present invention. The figure also shows portions of the boom crane containing or mounting electromechanical elements incorporated in the load safety device.

DESCRIPTION OF THE PRESENT INVENTION

Turning now to FIG. 1, there is shown therein a boom crane **10** with which the calibration circuitry of the present invention may be used. Crane **10** includes a base **12** typically shown in FIG. 1 as having tracks **14**. Crane body **16** is mounted on post **18** for rotation in a horizontal plane. One end of body **16** comprises a housing for a power source (not shown) such as a diesel motor for rotating body **16** and for powering the other motions of crane **10**. The other end of body **16** contains the operator's cab **19** and pivot **20** for crane boom **22**. The boom is comprised of a plurality of skeletal members **24**.

Boom **22** is moved about pivot **20** in a vertical plane by one or more boom suspension lines **26**. One end of boom suspension line **26** is connected to the top of boom **22**. The line is threaded over boom suspension line strut **28** and reeved around drum **30**. Drum **30** is connected to the diesel motor for taking up and paying out line **26** to move boom **22** to the desired luff angle.

Main hoist line **32** is passed through tackle **34** at the upper end of boom **22**. One end of the line contains hook **35** for attachment to the crane load **36**. The other end of the line is reeved around drum **38**, driven by the diesel motor, for raising and lowering load **36**.

In many cases, boom **32** is provided with an extension, termed a "jib" for increasing the heights at which the crane may work. Jib **40** may be mounted on the upper end of boom **22** and is held in the desired position by jib guy line **42** strung over jib strut **44**. Jib **40** may also be constructed of skeletal members **24**. A jib hoist line **46** extends from drum **48** powered by the diesel motor through tackle **50** at the upper end of jib **40** and contains a hook **52** at the running end thereof.

When load 36 is placed on hook 35 or 52, a tensile force is generated in boom suspension line 26. The amount of this tensile force depends on both the size of the load and the luff angle of boom 22. As the tension in boom suspension line 26 reflects both the factors utilized in determining the rating or capacity of the crane, it has been found desirable, for reasons of simplicity, to establish, in graphic or tabular form, the tension in boom suspension line 26 which corresponds to the maximum rating of the crane. Such a graph 60 is shown in FIG. 2*a*, in which the ordinate represents the tensile force in the boom suspension line corresponding to the maximum rating of crane 10 at each of the boom luff angles shown along the abscissa. It will be appreciated that a family of curves 60*a*, 60*b*, 60*c*, etc. are generated corresponding to boom suspension line tensile force appearing when the crane is loaded to 95 percent, 90 percent, 85 percent, etc. of rated load. An additional graph 61*a* is also shown in FIG. 2*a* which provides the same information when the load is applied to hook 52 of jib 40. In a typical boom crane, the tipping moment applied to the base of the crane determines the rating of the crane at luff angles of up to around 60°. At luff angles of greater than about 60° the rating of the crane is determined mainly by the compressive strength of the boom and jib.

In order to incorporate the tension of boom suspension line 26, as shown by graph 60, into a safety device which can sense when the maximum rated load is being applied to crane 10, it is necessary to provide means or sensing the tension in the boom suspension line as well as the luff angle of boom 22. The tension in boom suspension line 26 is measured by load cell 72 which is interposed in the line, adjacent the upper end of boom 22. Load cell 72 provides an electric signal proportional to the tension in boom suspension line 26, and for this purpose may comprise a strain gauge, or preferably, a variable differential transformer. The luff angle of boom 22 may be measured by a potentiometer 74, the resistive element of which is fixed to the boom and the wiper is attached to a plumb bob so that as the boom is pivoted about pivot 20, the wiper is moved along the resistive element.

Turning now to FIG. 3, the circuitry of a boom crane load safety device 80 is shown therein. The device includes oscillator 82 for energizing variable differential transformer load cell 72. Specifically, oscillator 82 provides an alternating current signal 83 to primary winding 84 of load cell 72. The coupling between primary winding 84 and secondary winding 86 is a function of the tension in boom suspension line 26 so that the magnitude of the output signal 87 is likewise a function of the tension in boom suspension line 26.

The output signal of load cell 72 is amplified by amplifier 88 and is provided to the demodulator 92 which provides a DC output signal 93 proportional in magnitude to the tension in boom suspension line 26. Demodulator 92 may include an appropriate filter for removing electrical noise and other spurious phenomena from the input signal.

Output signal 93 is used to energize the resistive element 96 of potentiometer 74, in a manner hereinafter described. Resistive element 96 may be fixedly mounted on boom 22. Wiper 130 of potentiometer is pivotally mounted on boom 22. A plumb-bob 132, diagrammatically shown in FIG. 3, keeps the position of wiper 130 constant with respect to a vertical reference plane as boom 22 is luffed, thereby causing the wiper to traverse resistive element 96 as boom 22 is moved. The signal picked off resistive element 96 by wiper 130 is provided in conductor 134 as the output signal of potentiometer 74.

The output signal in conductor 134 is provided to buffer amplifier 136. The output signal of amplifier 136 is supplied by conductor 138 to meter 140. Meter 140 is operable by the magnitude of the output signal of potentiometer 74 to provide a continuous indication of the percentage of the rated capacity of crane 10 at which the crane is actually operating.

The output signal in conductor 138 is also connected by conductor 142 and amplifiers 144 and 146 to a pair of voltage level detection circuits 148 and 150. Detection circuit 148 is connected to a green light 152 and an amber light 154 in panel 156 containing meter 140, for turning off the green light and turning on the amber light when the voltage level of the signal in conductor 138 indicates 90 percent of the rated load has been applied to crane 10. Detection circuit 150 is connected to red light 158 and horn 160 for turning on the red light and sounding the horn when the magnitude of the signal in conductor 138 indicates 100 percent of rated load has been reached. Detection circuit 150 may also be connected to solenoid or relay 162 which interrupts the operation of crane 10 or prevents additional luffing of boom 22 under maximum capacity conditions. The voltage level at which detection circuits 148 and 150 become operative may be adjusted by trigger adjust circuit 151 which provides an adjustable voltage to amplifiers 144 and 146 in opposition to the signal in conductor 142.

Meter 140 and detection circuit 150 are selected so that their operating characteristics permit a voltage signal of a preselected magnitude, for example, 5 volts, to drive the meter to 100 percent of capacity condition and operate detection circuit 150. The resistive element 96 of potentiometer 74 is therefore energized by the use of output signal 93 of demodulator 92 so that when the maximum rated load is applied to crane 10 at any given boom luff angle, a signal of 5 volts is applied to wiper 130 and to meter 140 and detection circuit 150. This is accomplished through the use of a plurality of operational amplifiers energized by output signal 93 and having differing gain or amplification factors. The operational amplifiers are connected to a plurality of taps or intermediate terminals on resistive element 96. Twelve such taps, 97*a* through 97L, are typically shown in FIG. 3. The taps are connected to 12 operational amplifiers 98*a* through 98L. Operational amplifiers 98 and resistive element 96 serve as a function generator to provide the desired 5 volt signal to wiper 130 when the maximum rating is applied to crane 10.

To generate the desired function, boom suspension line stress graph 60 is broken down into a series of linear segments extending between preselected points on the graph, as seen from FIG. 2*b*. The points correspond in number to the number of taps 97 on resistive element 96 and are selected so that the linear segments resemble, as closely as possible, the curvature of graph 60. It will be appreciated that where the slope of graph 60 is changing rapidly, the segments are shorter and the points closer together. FIG. 2*b* also shows voltage level 700 which drives meter 140 and detection circuit 150 to the 100 percent of rated capacity condition.

The operational amplifiers 98 provide voltage 700 to taps 97 when an input signal 93 corresponding to the maximum rating of crane 10 is applied to the input of the operational amplifiers. For example, input signal 93 may provide a voltage signal 101 to the input of operational amplifier 98*a* under maximum rated load conditions. This voltage corresponds to the ordinate of point 100 of graph 60 located above 0° on the abscissa of FIGS. 2*a* and 2*b*. The gain of operational amplifier 98*a* is then adjusted so that input signal 101 is amplified to voltage level 700 at the output of operational amplifier 98*a* and at tap 97*a* of resistive element 96. For this purpose, the gain of amplifier 98*a* must be slightly greater than one. In a similar manner, an input voltage 103 corresponding to the ordinate of point 102 on graph 60 above 15° on the abscissa provides output voltage 700 from operational amplifier 98*b* to tap 97*b* when increased by the gain of operational amplifier 98*b*.

The output signal applied to resistive element 96 by each of the remaining operational amplifiers is such as to generate voltage 700 across the resistive element 96 when an input signal 93 corresponding to the maximum rated load is applied to the input of the operational amplifiers. Each of the operational amplifiers is identified in FIG. 3 by an angle designation indicating the abscissa position along graph 60 and FIG. 2 of the ordinate voltage supplied by the operational amplifier. From FIG. 3, it will be appreciated that the gain of amplifiers such as 98*e* and 98*f* must be greater than the gain of amplifiers 98*a* and 98*b*, discussed above.

The gain of operational amplifiers **98** is determined by the ratio of the operational amplifier feedback resistor to the operational amplifier input resistor in accordance with the well-known operation of such amplifiers. Each of the operational amplifiers **98***a* through **98**L is thus provided with a feedback resistor **120***a* through **120**L, respectively, having a preselected resistance. The feedback resistors are connected between the input and the output of each of the operational amplifiers. An input resistor, **122***a* through **122**L, is also provided for each of the operational amplifiers, **98***a* through **98**L, respectively. These resistors have preselected resistances which form the desired ratio with feedback resistors **120***a* through **120**L. To lend flexibility to the operation of load safety device **80**, resistors **122***a* through **122**L may be mounted on a card termed a "boom card" which is inserted or plugged into device **80** to connect the resistors to the operational amplifiers. Thus, if the length or type of boom **22** utilized on crane **10** is altered, input resistors **122** may likewise be altered by the insertion of a different "boom card" in device **80**.

A second set of resistors **124***a* through **124**L are also provided in load safety device **80**. These resistors establish voltage **700** in resistive element **96** from operational amplifiers **98** responsive to input signals **93** generated when load **36** is suspended from jib **40**, rather than from boom **22**. As will be appreciated, a different rating factor is applied to crane **10** when jib **40** is in use than when boom **22** is used so that the gain of operational amplifiers **98** must be altered. As jib **40** may not be luffed to angles less than 50° without exceeding the load rating of the crane, resistors **124***a* through **124***d* connected to operational amplifiers **98***a* through **98***d* adjust the gain of these operational amplifiers so as to provide voltage **700** at all boom luff angles of less than 50°, regardless of the magnitude of input signal **93**. Resistors **124***a* through **124**L may also be mounted on a removable card for connection to operational amplifiers **98***a* through **98**L. The ends of resistors **122** and **124** not connected to the operational amplifiers are connected to circuit common.

The desired set of resistors **122** or **124** is connected to operational amplifiers **98** through switch **126** having switch leaves **126***a* through **126**L. Switch **126** may be mounted on the jib strut **44** so as to automatically switch from resistors **122** to resistors **124** responsive to the compressive stress applied to jib strut **44** when a load is placed on hook **52**.

In operation, a load **36** is affixed to one of hooks **35** or **52**. This load generates a tension in boom suspension line **26** and causes load cell **72** to generate a corresponding DC input signal **93** to operational amplifiers **98**. Assuming load **36** is applied to hook **35** on boom **22**, rather than hook **52** on jib **40**, switch **126** is operated so as to connect resistors **122** to operational amplifiers **98** so that the operation amplifiers function with the appropriate gain factors. Input signal **93** causes operational amplifiers **98** to energize resistive elements **96** of potentiometer **74** in accordance with the magnitude of the input signal and the gain of the amplifiers.

Wiper **130** is positioned along resistive element **96** at a point dependent on the luff angle of boom **22** and supplies an output signal in conductor **134** corresponding to the energization of resistive element **96** at that location.

Assuming that the combination of load **36** and the luff angle of boom **22** stresses crane **10** to less than the capacity of the crane, the signal in conductor **134** drives meter **140** to a level which indicates the percentage which the tension sensed in boom suspension line **26** by load cell **72** represents of the tension corresponding to the capacity of crane **10** at the luff angle of boom **22**, as sensed by the position of wiper **130** of potentiometer **74** on resistive element **96**. Detection circuit **148** lights green light **152** indicating safe operation of crane **10**. Detection circuit **150** is quiescent.

Assuming a constant luff angle of boom **22**, as the load on hook **34** increases, the signal **93** applied to operational amplifiers increases and since the position of wiper **130** is also constant, the signal in conductor **134** increases a like amount.

When a load is applied to hook **35** which places stresses on crane **10** corresponding to 90 percent of rated capacity, the signal level of the output signal on conductor **134** is such as to operate detection circuit **148** to turn off green light **152** and turn on amber light **154**. When the load on the crane reaches 100 percent of capacity, voltage level **700** is reached and detection circuit **150** is operated to turn on red light **158** and sound horn **160**. Detection circuit **150** may operate relay **162** to stop further operation of the crane if desired.

Under conditions in which boom **22** is being moved to various luffing angles, both the energization of resistive element **96** by operational amplifiers **98** and the position of wiper **130** will vary as the luff angle of the boom varies. When the combination of the tension in boom suspension line **26** and the corresponding energization of resistive element **96** and the boom luff angle as sensed by the position of wiper **130** on the resistive element is such as to subject the crane to 100 percent of rated capacity, the magnitude of the signal in conductor **134** will rise to the level of voltage **700** and will operate detection circuit **150** to turn on red light **158** and sound horn **160**.

As indicated in the introductory portions hereof, it is necessary from time to time to check the operation of load safety device **80** under known conditions to insure that the various electromechanical and electronic elements in the device are operating properly.

For example, boom suspension line **26** or load cell **72** may become damaged during the operation of crane **10**. It may also be necessary to recalibrate load safety device **80** for drift due to aging or other factors. The calibration circuitry of the present invention is designed to provide such checking and calibration without the necessity of resorting to test loads of known weight.

To do this, the calibration circuit **170** of the present invention utilizes the weight of boom **22** in its unloaded condition as a test weight. The weight of boom **22** is known, either through weighing the assembly prior to installation on crane body **16** or by calculating the weight based on the structural configuration of the boom.

The calibration circuit **170** includes means for altering the gain of one of the operational amplifiers such that the energization supplied by the operational amplifier to resistive element **96** when the boom is at a predetermined luff angle is sufficient to provide an output from load safety device **80** corresponding to 100 percent of capacity. This signal drives meter **140** to the 100 percent of capacity position and actuates red light **158** and horn **160**.

To provide such operation, a luff angle is selected at which calibration of load safety device **80** may be obtained. For example, it has been found highly satisfactory to utilize a boom luff angle of 35° for calibrating purposes since a relatively large tensile force is generated in boom suspension lines **26**, calibration can be obtained in instances in which vertical clearance is not available, and the boom is not subjected to excessive wind loading. However, a luff angle generally corresponding to any one of taps **97** on resistive element **96** may be utilized.

Calibration switch **180** is interposed in the input of operational amplifier **98***d* connected to tap **97***d* . Wiper **130** will be located at tap **97***d* when the crane is at a boom luff angle of 35°. Specifically, calibration switch **180** is interposed in the input of operational amplifier **98***d* between the operational amplifier and switch **126**. In its normal position, switch **180** connects switch leaf **126***d* to the input of operational amplifier **98***d* so that the operation of load safety device **80** is not altered.

In its operative state, calibration switch **180** connects an alternative pair of resistors to the input of operational amplifier **98***d*. These resistors are used for calibration purposes. Resistor **182** is utilized when boom **22** is not fitted with a jib while resistor **184** is utilized when boom **22** is fitted with a jib. A switch leaf **126***m* may be utilized for automatically switching between the resistors, responsive to the insertion of the jib card in the load safety device. The ends of resistors **182** and

184 not connected to switch leaf 126*m* are connected to circuit common. Resistors 182 and 184 may be mounted on the boom card and jib card, respectively, so that the magnitudes of the resistors are automatically altered as the cards are changed responsive to changes in the configuration of the boom and jib.

The sizes or values of resistors 182 and 184 are selected, with respect to the size of feedback resistor 120*d*, so as to provide a gain to operational amplifier 98*d* sufficient to generate a signal at tap 97*d* from DC input signal 93 equal to the DC input signal corresponding to that occurring when crane 10 is operated at capacity under normal operating conditions of load safety device 80.

To commence the calibration operation, the crane operator moves calibration switch 180 into the operative condition, disconnecting resistor 122*d* or 124*d* from the input of operational amplifier 98*d* and connecting one of resistors 182 or 184 to the input of the operational amplifier. The crane operator then moves boom 22 to the predetermined luff angle of 35°. This moves wiper 130 along resistive element 86 to tap 97*d*. Load cell 72 generates a DC signal 93 proportional to the tension in boom suspension line 26. The gain of operational amplifier 98*d* provided by the ratio of input and feedback resistors is such as to generate a signal at tap 97*d* from DC signal 93 equal in magnitude to voltage 700 signal generated when crane 10 is operated at 100 percent capacity under normal operating conditions of load safety device 80. The signal applied to wiper 130 is supplied to meter 140. Meter 140 is driven to a 100 percent of capacity condition to provide the operator with a visual indication that load safety device 80 is correctly calibrated. The signal at wiper 130 when applied to detection circuit 150 operates red light 158 and horn 160 to provide additional indications of the proper operation of load safety device 80.

In the event load safety device 80 is not properly calibrated for one reason or another, meter 140 will read more or less than 100 percent of capacity during the calibration test. In the event the reading on meter 140 obtained by the operation of calibration circuit 170 indicates that load safety device 80 is out of adjustment by an amount greater than approximately 5 percent of rated load, the operator will usually call for a recalibration of the device by more precise means such as the aforementioned test weights. Minor errors in calibration may be corrected by adjusting the gain of amplifier 88 by means of adjustable resistor 881 so that meter 140 reads 100 percent of rated capacity.

The operator may also check for improper functioning of load safety device 80 by closing switch 186 which removes signal 87 from amplifier 88 and the remaining portions of the device. If load safety device 80 is operating properly with no internal offsets or the like, meter 140 will read zero in the absence of an input signal.

Once the correct operation of load safety device 80 has been ascertained by calibration circuit 170, the crane operator switches calibration switch 180 to the normal state to restore the operation of load safety device to its load-sensing function. Thereafter load safety device 80 may be operated with the assurance that it is in a completely operative condition and is properly calibrated.

We claim:

1. In combination, a load safety device for a crane having a luffable boom for receiving the crane load, said load safety device having means including a function generator responsive to the boom luff angle and the crane load and providing an electric signal indicating when the capacity of the crane has been reached at each boom luff angle: and calibration means for determining that said load safety device is operative and calibrated and comprising, means connected to said function generator and selectively altering its operation at a predetermined boom luff angle for causing the weight of the unloaded crane boom to provide an electric signal corresponding to that indicating the capacity of the crane has been reached at said predetermined boom luff angle.

2. The combination of claim 1 wherein said function generator includes an amplifier for providing said electric signal and said calibration means includes means for altering the gain of said amplifier to selectively alter the operation of said function generator.

3. The combination of claim 2 wherein said function generator includes an operational amplifier for providing said electric signal and having input and feedback resistances and wherein said calibration means includes means for altering the ratio of the input and feedback resistances to alter the gain of said amplifier.

4. The combination of claim 2 wherein said calibration circuit is further defined as including means for altering the gain of said amplifier in accordance with variations in the physical characteristics of the crane boom.

5. The combination of claim 1 wherein said calibration means includes means for adjusting the signal produced by the weight of the unloaded crane boom at said predetermined boom luff angle to compensate for variations in the operation of said function generator.

6. In combination, a load safety device for a crane having a luffable boom for receiving the crane load, said crane having a boom suspension line for controlling the luff angle of the boom and subjected to a tensile force when said crane boom is loaded, said load safety device including a function generator having an electric function signal generating means energized by an electric signal proportional to the tension in said boom suspension line and a pick off means responsive to the boom luff angle providing an electric signal from said signal-generating means for indicating when the capacity of the crane has been reached at each boom luff angle: and calibration means determining that said load safety device is operative and calibrated and comprising; means connected to said function generator and selectively altering the operation of said function generating means for causing an electric signal proportional to the tension generated by the weight of the unloaded crane boom to energize said function generating means sufficient to provide, to said pick off means, a signal corresponding to that indicating the capacity of the crane has been reached when the boom is luffed to a predetermined angle.

7. The combination of claim 6 wherein said function generator includes a plurality of operational amplifiers for energizing said function generating means, said operational amplifiers having input and feedback resistances for determining the gain thereof and wherein said calibration means includes means for altering the gain of one of said amplifiers by altering the ratio of said input and feedback resistances for energizing said function generating means to provide the desired signal to said pick off means.

8. The combination of claim 7 wherein said calibration means includes means for adjusting the boom suspension line tension signal to compensate for variations in the operation of said function generating means.

9. The combination of claim 7 wherein said calibration means is further defined as including means for altering the ratio of the input and feedback resistances in accordance with variations in the physical characteristics of the crane boom.

10. A method of determining whether a load safety device for a crane is operative and calibrated, said crane having a luffable boom for receiving the crane load, said load safety device having a function generator responsive to the boom luff angle and the crane load and providing an electric signal for indicating when the capacity of the crane has been reached at each boom luff angle, said method comprising the steps of:

selectively altering the operation of said function generator at a predetermined boom luff angle for causing the weight of the unloaded crane boom to provide an electric signal corresponding to that indicating the capacity of the crane has been reached at said predetermined boom luff angle; and

luffing said boom to said predetermined boom luff angle; and

sensing the provision of said electric signal indicating that the capacity of the crane has been reached.

11. The method of claim 10 including the step of adjusting said signal indicating that the capacity of the crane has been reached.

12. The method of claim 10 including the step of selectively altering the operation of the function generator in accordance with variations in the physical characteristics of the crane boom.

13. The combination of claim 6 wherein said calibration means includes means for removing said boom suspension line signal from said electric function signal generating means for ascertaining improper operation of said load safety device.

* * * * *