July 1, 1924. 1,499,621

J. B. LADD

MECHANISM FOR DRAWING CAST PIPES FROM MOLDS

Filed June 12, 1923 3 Sheets-Sheet 1

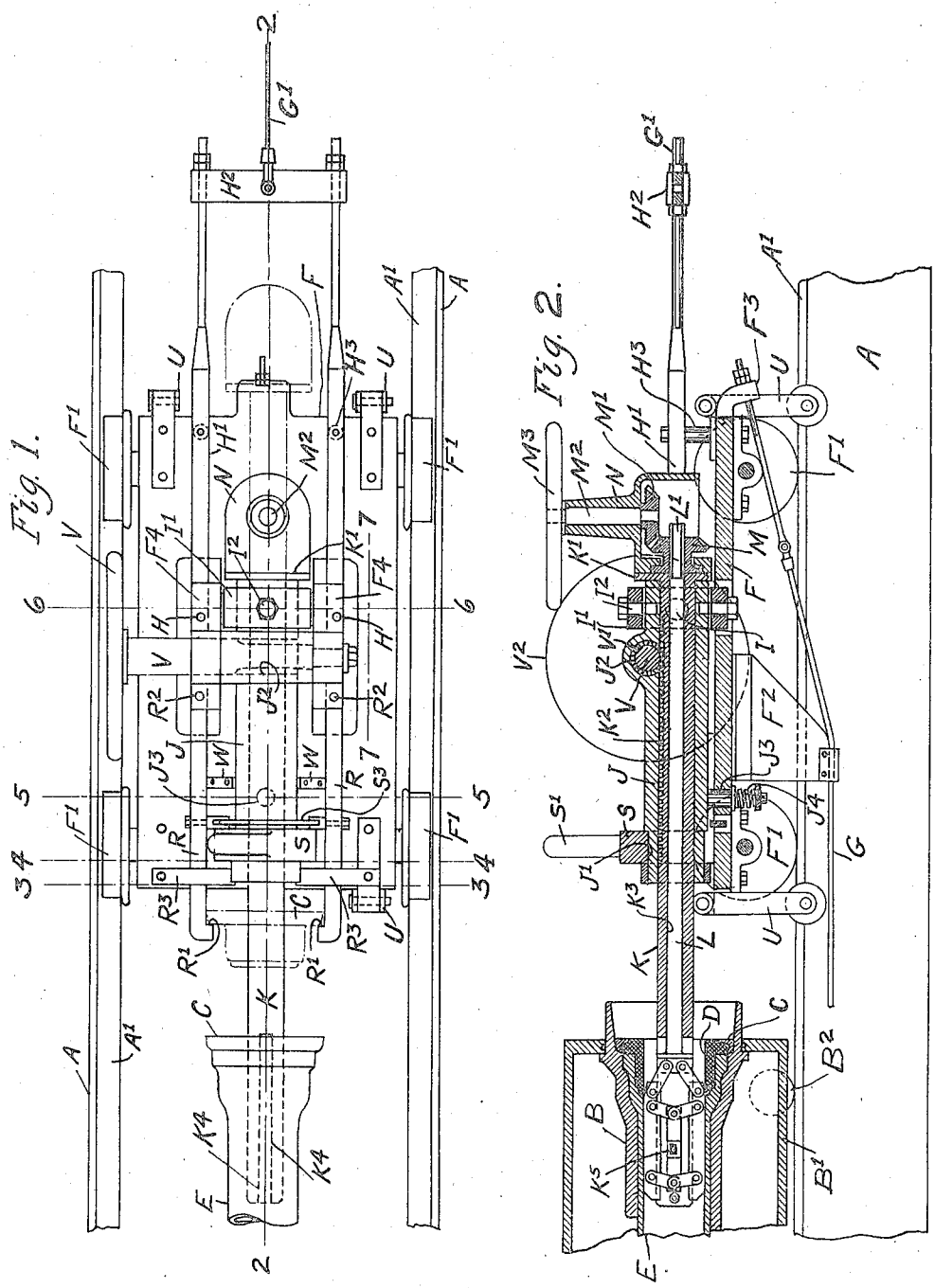

INVENTOR
James B. Ladd
BY
Francis T. Chambers
ATTORNEY

July 1, 1924. 1,499,621

J. B. LADD

MECHANISM FOR DRAWING CAST PIPES FROM MOLDS

Filed June 12, 1923 3 Sheets-Sheet 2

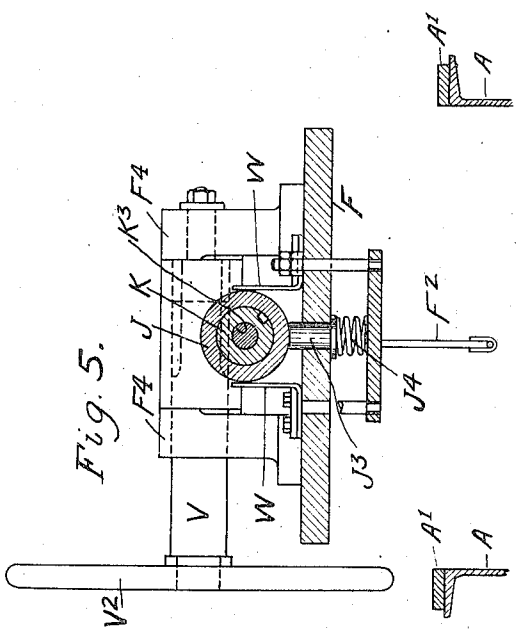

Fig. 5.

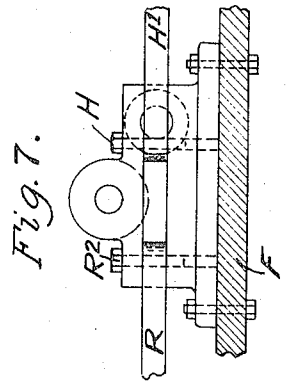

Fig. 7.

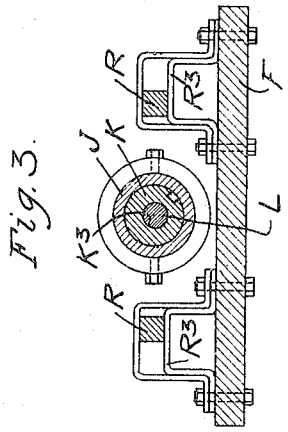

Fig. 3.

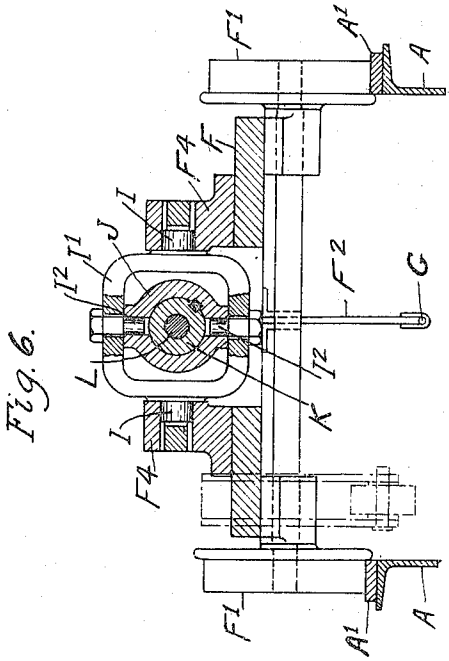

Fig. 6.

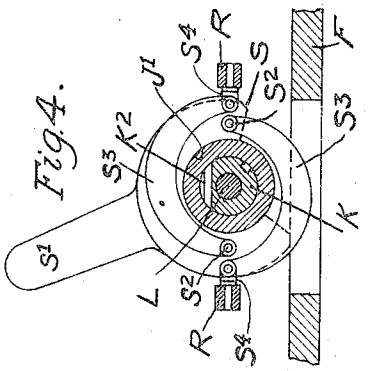

Fig. 4.

INVENTOR
James B. Ladd
BY
Francis V. Lawson
ATTORNEY

July 1, 1924. 1,499,621

J. B. LADD

MECHANISM FOR DRAWING CAST PIPES FROM MOLDS

Filed June 12, 1923 3 Sheets-Sheet 3

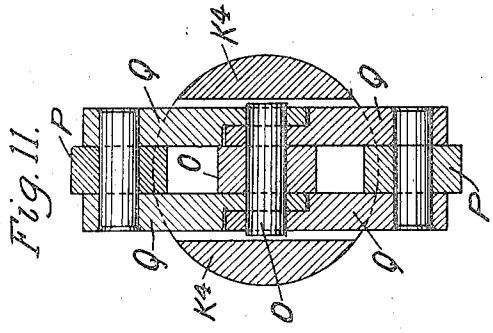

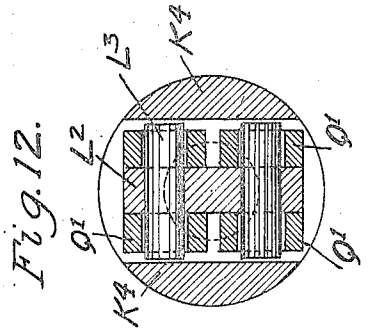

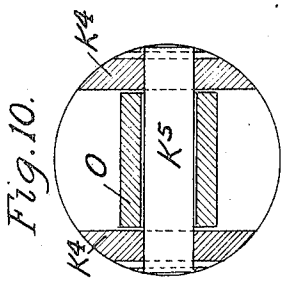

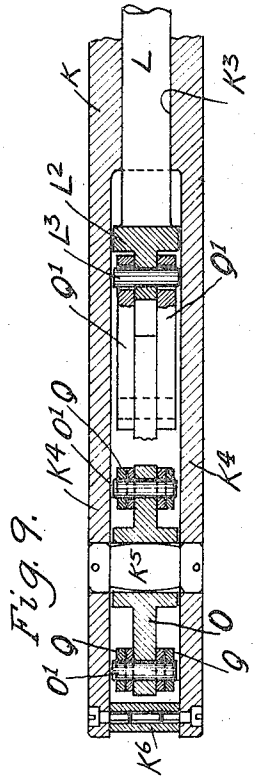

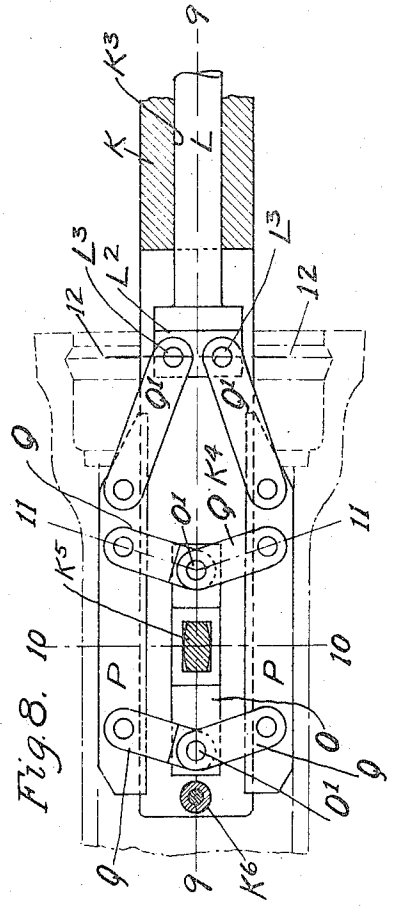

INVENTOR
James B. Ladd
BY
Francis P. Chandler
ATTORNEY

Patented July 1, 1924. 1,499,621

UNITED STATES PATENT OFFICE.

JAMES B. LADD, OF ARDMORE, PENNSYLVANIA, ASSIGNOR TO UNITED STATES CAST IRON PIPE & FOUNDRY COMPANY, OF BURLINGTON, NEW JERSEY, A CORPORATION OF NEW JERSEY.

MECHANISM FOR DRAWING CAST PIPES FROM MOLDS.

Application filed June 12, 1923. Serial No. 644,955.

To all whom it may concern:

Be it known that I, JAMES B. LADD, a citizen of the United States of America, and resident of Ardmore, county of Montgomery, State of Pennsylvania, have invented a certain new and useful Improvement in Mechanism for Drawing Cast Pipes from Molds, of which the following is a true and exact description, reference being had to the accompanying drawings, which form a part thereof.

My invention relates to mechanism especially designed and adapted to engage a cast pipe in the mold in which it is cast and draw it from the mold. My improved mechanism is especially designed for use in connection with metallic centrifugal molds and mold actuating mechanism of the De Lavaud type, although it is adapted as well for use with other types of molding apparatus.

The nature of my improvements will be best understood as described in connection with the drawings in which they are illustrated and in which

Figure 1 is a plan view of my apparatus with the cast pipe shown as withdrawn from the mold.

Figure 2 is an elevation on the line 2—2 of Fig. 1, showing also the mold and mold supporting carriage of the ordinary De Lavaud type and the cast pipe in the mold.

Figure 3 is a cross section on the line 3—3 of Fig. 1.

Figure 4, a cross section on the line 4—4 of Fig. 1.

Figure 5, a cross section on the line 5—5 of Fig. 1.

Figure 6, a cross section on the line 6—6 of Fig. 1.

Figure 7, a side elevation of a portion of the apparatus taken as on the line 7—7 of Fig. 1.

Figure 8 is an elevation on an enlarged scale of the pipe gripping mechanism shown in Fig. 2.

Figure 9 is a sectional view on the line 9—9 of Fig. 8.

Figure 10, a cross section on the line 10—10 of Fig. 8.

Figure 11, a cross section on the irregular line 11—11 of Fig. 8, and

Figure 12 is a cross section on the line 12—12 of Fig. 8.

A, A, indicate longitudinal members of the framing which support tracks indicated at A′, A′. B, Fig. 2, indicates the mold which is supported on the carriage B′ which is, in operation, supported on the tracks A′ by the wheels B^2. C indicates the core ring which is attached to the bell end of the mold B in the usual manner and is shown as supporting a core indicated at D. E indicates the pipe shown as in the position in the mold in which it is cast. F indicates the body or framing of a carriage which is supported on the tracks A′ by wheels F′ and is, of course, longitudinally movable. F^2 indicates a bracket extending down from the bottom of the framing F, and F^3 a bracket extending from the right hand end of the framing F, and to these brackets is connected the driving cable indicated at G. The other end of this cable, indicated at G′, is connected to the carriage through the pivot pins indicated at H, H. The bars H′ rest upon supporting pins H^3 and are secured to a cross bar H^2 to which in turn the cable end G′ is attached, as shown in Fig. 1. Extending upward from the framing F are the trunnion supports indicated at F^4, F^4. In these are supported the trunnion pins I, I, of a rectangular yoke indicated at I′, which is provided with inwardly extending trunnion pins I^2 through which it is connected to the guide J which is supported on the yoke I′ and which, by reason of the construction indicated, is capable of universal movement. This guide extends parallel to the length of the carriage and has its free end elastically supported on the pin J^3 of the spring indicated at J^4, while, at the same time, the free end of this guide is elastically aligned by means of the contacting springs indicated at W, W. Near the free end of the guide J, I form, as shown in the drawings, a cylindrical bearing indicated at J′ and at J^2 I form through the guide J a transverse passage in communication with its tubular interior for purposes which will be hereafter described. K is a tubular support for the gripping mechanism which is longitudinally movable in the tubular guideway formed in the guide J and is provided at its right hand end with a flange K′ and at its top with a rack, indicated at K^2. The left hand end of the support K is slotted so as to form

two parallel portions K^4, K^4, between which extend the pin indicated at K^5 and the spacing device indicated at K^6, best shown in Figs. 8 and 9. L is a rod extending through the hollow support K and having its right hand end threaded, as indicated at L'. The right hand end of the rod L is formed into a head, indicated at L^2, which supports pivot pins L^3, L^3. N is a housing secured to the flange K' of the support K and which supports the rotatable nut M which screws on the end L' of the rod L and is provided, as shown, with bevel teeth which engage the bevel wheel M' on the shaft M^2; M^3 being a hand wheel for rotating this shaft. O is a bar supported on the pin K^5 and supporting at its end the pivot pins indicated at O', O'. P, P, are gripping bars which are connected to the pivot pins O' by the links indicated at Q, Q, and Q', Q', are links connecting the pivot pins L^3 with the grippers P, as best shown in Fig. 8.

R, R, see Figs. 1 and 3, are bars having gripping jaws R', R', and pivotally attached to the carriage at R^2, R^2. The bars R are supported in horizontal guideways, as indicated at R^3, Fig. 3, and they are thrown in and out by the mechanism shown in Figs. 1, 2 and 4, consisting of a collar S fitting on the bearing J' of the guide J and having attached to it a lever arm S' by which it can be turned on the bearing. Attached to this collar S are pivot pins S^2, S^2, to which are connected curve links S^3, S^3, connected at S^4, S^4, with the bars R, R, as best shown in Fig. 4.

U, U, are pivot links secured to the ends of the core F for purposes which are not connected with the present invention. V is a shaft extending transversely through bearings in the brackets F^4 and through the opening J^2 in the guide-way J. On this shaft is formed or secured the gear wheel V' which engages the rack K^2 at the top of the support K and V^2 is a hand wheel for actuating the shaft V. W, W, best shown in Figs. 1 and 5, are upwardly extending springs contacting with the sides of the guide J and serving to align it.

In operation, the pipe having been cast in the mold B, the car F with the support K in extended position, as shown in Fig. 2, is moved forward into the mold with the grippers P, P, contracted so as not to contact with the pipe as they move into it. The next operation is effected by rotating the hand wheel M^3 and through the gear connections rotating the nut M on the threaded end L' of the rod L. This forces the rod L toward the left so that the pivot links Q' force the jaws P toward the left, which motion, through the link connections Q, Q, etc., effects an outward movement of the jaws P, so that they firmly engage the pipe, as shown in Fig. 2. The carriage is then moved toward the right on the tracks A' and the pipe is withdrawn from the mold, and, obviously, in addition to moving the carriage, the pipe can be shifted to a certain extent by a longitudinal movement of the support K.

The pipe after withdrawal from the mold still supports the core ring C and is supported on any convenient devices (none shown) and to remove the core ring the hand wheel V is rotated so that by the action of the gear wheel V' on the rack K^2 of support K the carriage is drawn towards the left over support K until the jaws R', R', of the bars R extend over the core ring C. The lever S' is then moved so that acting through the described mechanism the jaws R' are caused to grip the core ring after which by a reverse movement of the carriage over guide K the core ring is removed, as shown in dotted lines in Fig. 1.

Having now described my invention, what I claim as new and desire to secure by Letters Patent, is:

1. Mechanism for drawing cast pipe from molds comprising a longitudinally movable carriage, a longitudinally extending guide supported on the carriage, a tubular support for pipe gripping mechanism longitudinally movable in said guide, means for moving said tubular support in the guide, pipe gripping mechanism supported on the end of the tubular support, a rod for actuating the gripping mechanism movable in the tubular support and means for moving said rod to actuate the gripping mechanism.

2. Mechanism for drawing cast pipe from molds comprising a longitudinally movable carriage, a longitudinally extending guide, a universal joint whereby the guide is secured to the carriage, elastic supporting and aligning means for supporting the free end of the guide, a tubular support for pipe gripping mechanism, longitudinally movable in said guide, means for moving said tubular support in the guide, pipe gripping mechanism supported on the end of the tubular support, a rod for actuating the gripping mechanism movable in the tubular support and means for moving said rod to actaute the gripping mechanism.

3. Mechanism for drawing cast pipe from molds comprising a longitudinally movable carriage, a longitudinally extending guide supported on the carriage, a tubular support for pipe gripping mechanism longitudinally movable in said guide, means for moving said tubular support in the guide, pipe gripping mechanism supported on the end of the tubular support, a rod for actuating the gripping mechanism movable in the tubular support, means for moving said rod to actuate the gripping mechanism, gripping jaws for engaging the core ring of the mold secured to the carriage and means for actuating said jaws.

4. Mechanism for drawing cast pipe from molds comprising a longitudinally movable carriage, a longitudinally extending guide supported on the carriage, a tubular support for pipe gripping mechanism, longitudinally movable in said guide, means for moving said tubular support in the guide, pipe gripping mechanism supported on the end of the tubular support, consisting of gripping jaws and links connecting said jaws with the support, a rod for actuating the gripping mechanism movable in the tubular support, links connecting said rod with the jaws and means for moving said rod to actuate the gripping mechanism.

5. Mechanism for drawing cast pipe from molds comprising a longitudinally movable carriage, a longitudinally extending guide supported on the carriage, a tubular support for pipe gripping mechanism, longitudinally movable in said guide, a rack formed on said support, a shaft supported on the carriage having a gear wheel in engagement with the rack whereby the support is moved in the guideway, a hand wheel for actuating said shaft and gear, pipe gripping mechanism supported on the tubular support, a rod for actuating the gripping mechanism movable in the tubular support and having a threaded end, a fixed nut rotatble on said threaded end, gears for actuating said nut and a hand wheel for actuating the gears.

JAMES B. LADD.