(No Model.) 2 Sheets—Sheet 1.

C. F. HINTZE.

BARB WIRE MACHINE.

No. 590,889. Patented Sept. 28, 1897.

Fig. I.

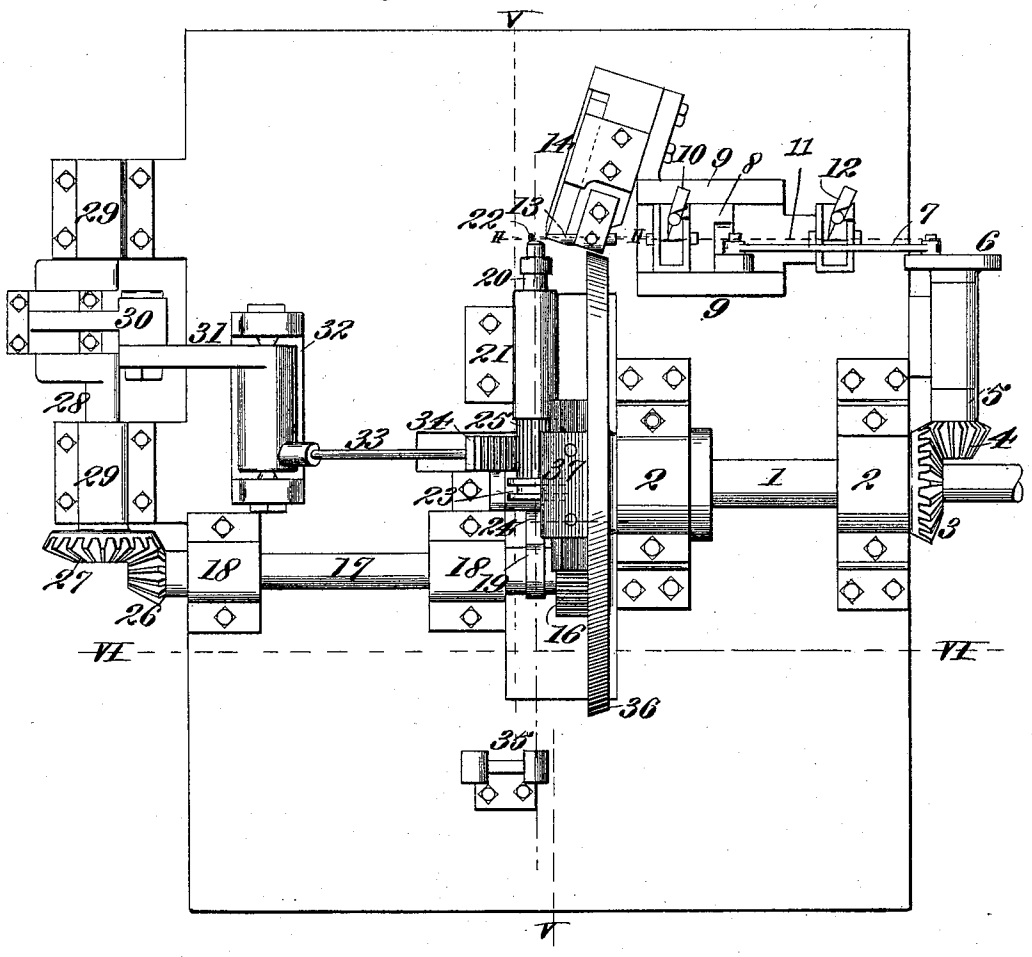

Fig. II.

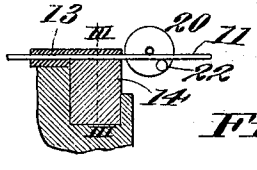

Fig. III.

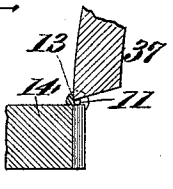

Fig. IV.

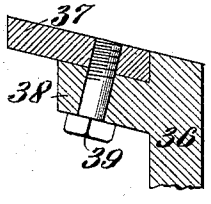

Attest:
E. C. Knight
Stanley Stowell

Inventor:
Charles F. Hintze.
By Wright Brothers
Atty's

THE HOARIS PETERS CO., PHOTO-LITHO., WASHINGTON, D. C.

(No Model.) 2 Sheets—Sheet 2.

C. F. HINTZE.

BARB WIRE MACHINE.

No. 590,889. Patented Sept. 28, 1897.

Fig. V.

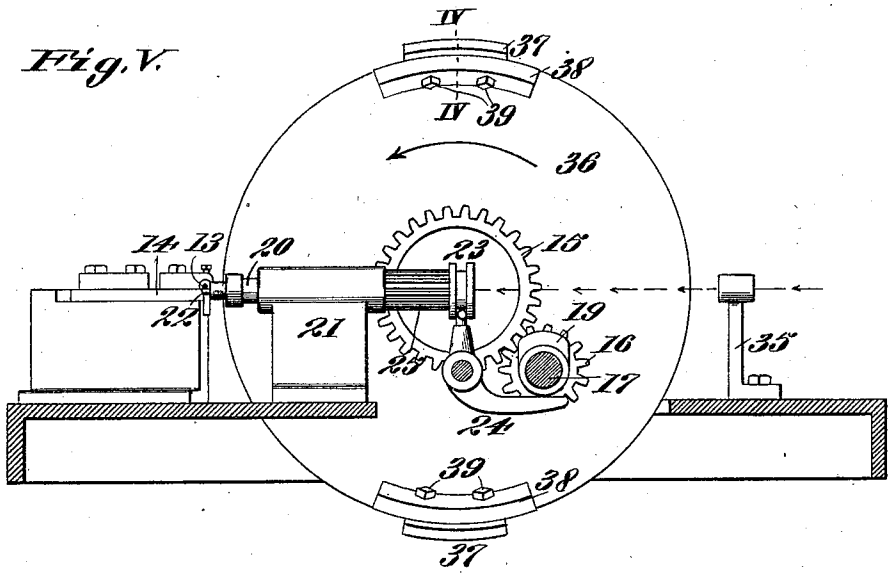

Fig. VI.

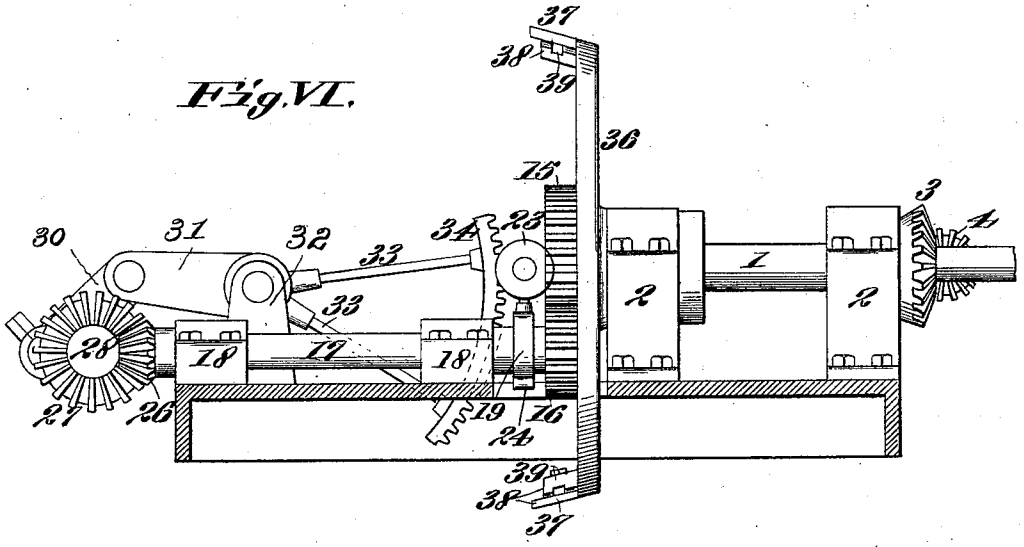

Attest;
E. S. Knight
Stanley Stoner.

Inventor;
Charles F. Hintze.
By Knight Bros
Atty's

THE NORRIS PETERS CO., PHOTO-LITHO., WASHINGTON, D. C.

UNITED STATES PATENT OFFICE.

CHARLES F. HINTZE, OF ST. LOUIS, MISSOURI.

BARB-WIRE MACHINE.

SPECIFICATION forming part of Letters Patent No. 590,889, dated September 28, 1897.

Application filed April 15, 1897. Serial No. 632,315. (No model.)

To all whom it may concern:

Be it known that I, CHARLES F. HINTZE, a citizen of the United States, residing at the city of St. Louis, in the State of Missouri, have invented a certain new and useful Improvement in Barb-Wire Machines, of which the following is a full, clear, and exact description, reference being had to the accompanying drawings, forming a part of this specification.

My invention relates to an attachment to barb-wire machines for severing barbs as they are formed upon the strand-wires; and it consists mainly in the employment of rotary cutters for this purpose.

My invention consists, further, in details of construction hereinafter fully described, and pointed out in the claim.

Referring to the drawings, Figure 1 is a plan or top view. Fig. 2 is a sectional view on the line II II, Fig. 1. Fig. 3 illustrates a section taken on the line III III, Fig. 2, and a section of a fragment of the rotary knife or cutter. Fig. 4 illustrates a section taken on the line IV IV, Fig. 5. Fig. 5 illustrates a section taken on the line V V, Fig. 1, showing portions of the machine in elevation. Fig. 6 illustrates a section taken on the line VI VI, Fig. 1, showing portions of the machine in elevation.

1 designates the driving-shaft, mounted in bearing-boxes 2 on the bed of the machine. Upon this shaft is a bevel-pinion 3, that meshes with and drives a bevel-pinion 4 upon a shaft 5, carrying at its opposite end a crank-disk 6, the pin of which receives a pitman 7. The pitman 7 connects with a slide 8, that operates in guides 9. On the slide 8 is a spring-actuated gripper-dog 10, that grips the wire 11, from which the barbs are formed, and draws the wire forward on each turn of the crank-disk 6.

12 is a spring-actuated gripper-dog mounted on the bed of the machine, through which the wire 11 is held on the backward stroke of the slide 8.

13 designates a tube that receives the wire 11 to present it to the barb-former.

14 is a stationary knife mounted upon the bed of the machine.

On the inner end of the shaft 1 is a cog-wheel 15. The teeth of this cog-wheel mesh with the teeth of a pinion 16 on a shaft 17, mounted in journal-boxes 18. On the shaft 17 is a cam 19.

20 designates the strand-wire-receiving spindle, journaled in a post 21 and provided with the barb-forming finger 22, located at its outer end. The spindle 20 is capable of reciprocation to free the finger 22 from engagement with the barb after formation and at its inner end is a grooved disk 23.

24 designates a pivotally-mounted rocking arm one end of which fits in the groove of the disk 23, while the other end projects laterally and is designed to be struck by the cam 19 on each rotation of the shaft 17, whereby the reciprocation of the spindle 20 is accomplished. The spindle 20, adjacent to the disk 23, is provided with longitudinally-arranged teeth 25.

26 designates a bevel-pinion on the outer end of the shaft 17. This pinion 26 meshes with a bevel-pinion 27 on a crank-shaft 28, mounted in boxes 29. On the crank-shaft is a pitman 30, that connects with a rocker-arm 31, pivoted in a bearing 32. The rocker-arm 31 carries arms 33, on the free end of which is a toothed segment 34, that meshes with the teeth 25 on the spindle 20. This mechanism provides for the rotation of the spindle to produce the barbs by means of the forming-finger 22.

35 designates a guide-post through which the strand-wires pass to the spindle 20.

No novelty *per se* is herein claimed in the parts thus far described, my invention relating to the features I will now proceed to set forth.

36 designates a disk rigidly mounted on the shaft 1. This disk carries knives or cutters, through means of which the barbs are severed from the wire 11 on their formation. The knives or cutters are designated by 37 and are secured to the disk by means of lugs 38, rigid upon the disk, through which lugs and knives screws 39 or other suitable fastenings are inserted. The lugs 38 are arranged at an angle to the face of the disk 36, and the knives 37, being secured to said lugs, are placed at an acute angle with relation to the face of the disk, an arrangement that is necessary in

order to so place the cutting edges of the knives that in their rotation they will strike the wire to be cut and sever it. The disk 36 traveling with the shaft 1 in its revolutions, the knives or cutters 37 are brought into proximity with the stationary knife 14, and the barbs as formed are severed from the wire 11, from which they are produced by the knives 37 shearing against the knife 14. I have shown two of the knives 37 on the disk 36, this being the number required according to the gearing of the machine, but such gearing may be altered at will, and in such case one or more than two knives or cutters 37 might be employed upon the disk 36.

By the employment of one driving-shaft for operating the barb-forming spindle, and the mechanism for imparting the rotary and longitudinal movement to said spindle, the disk, and its cutter a positive movement of all the parts is obtained and all of said parts must operate in unison with the driving-shaft.

I claim as my invention—

In a barb-wire machine, the combination of a driving-shaft, a barb-forming spindle, mechanism whereby both rotary and longitudinal movement is imparted to said spindle by said shaft, a fixed cutter, a disk secured to said shaft and revolved thereby as the shaft imparts to said spindle its respective movements, and a cutter secured to said disks for coöperating with said fixed cutter to sever the wire after the barb has been formed by said spindle, substantially as set forth.

CHARLES F. HINTZE.

In presence of—
E. S. KNIGHT,
STANLEY STONER.