Jan. 9, 1940. M. LANGE 2,186,533

CURTAIN SUPPORT

Filed Sept. 23, 1938 2 Sheets-Sheet 1

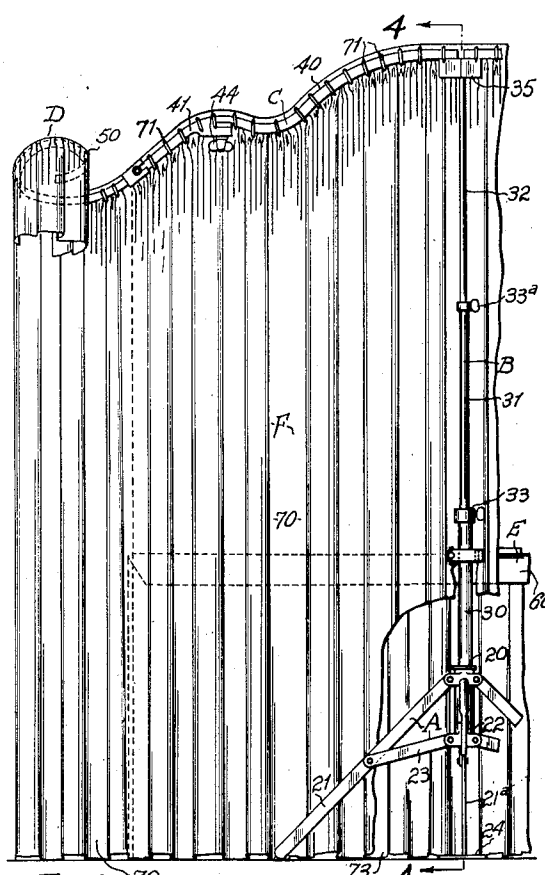

FIG. 1

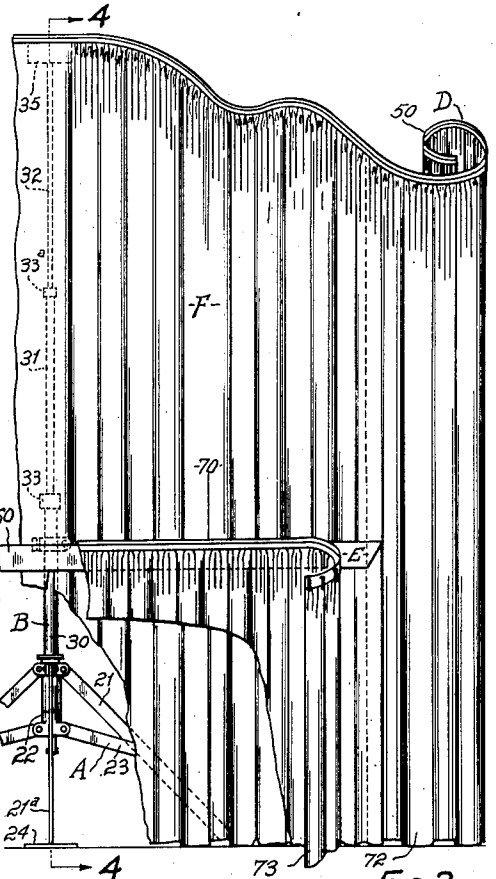

FIG. 2

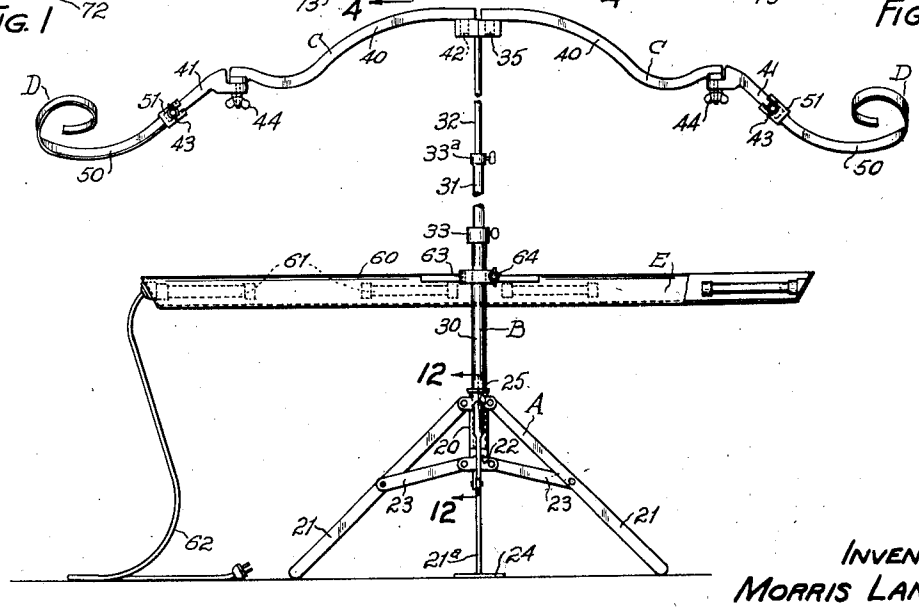

FIG. 3

INVENTOR.
MORRIS LANGE
BY Morton S. Brockenbrough
ATTORNEY.

Jan. 9, 1940. M. LANGE 2,186,533

CURTAIN SUPPORT

Filed Sept. 23, 1938 2 Sheets-Sheet 2

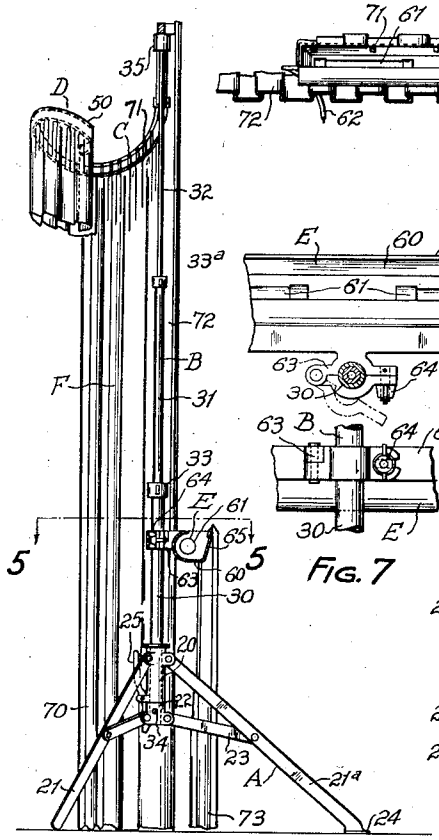

FIG. 4

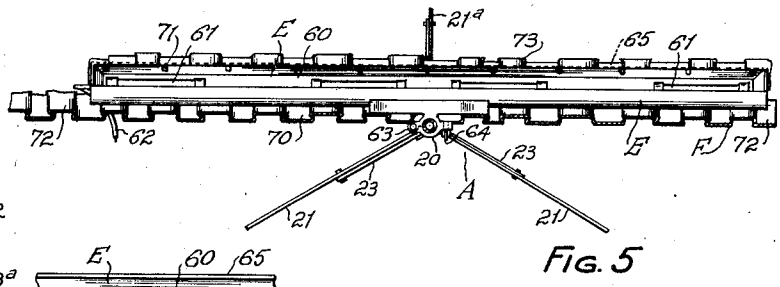

FIG. 5

FIG. 6

FIG. 7

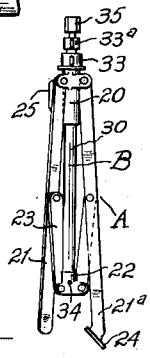

FIG. 11

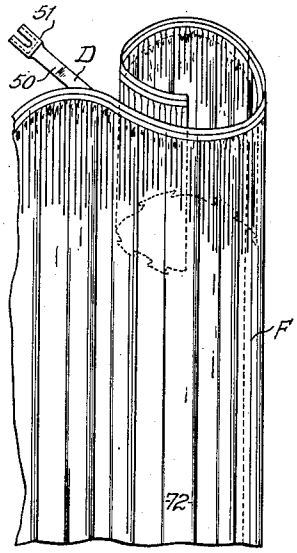

FIG. 8

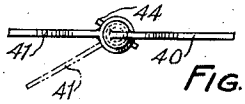

FIG. 13

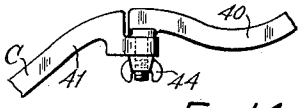

FIG. 14

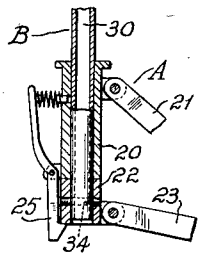

FIG. 12

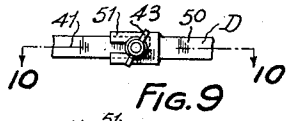

FIG. 9

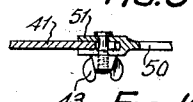

FIG. 10

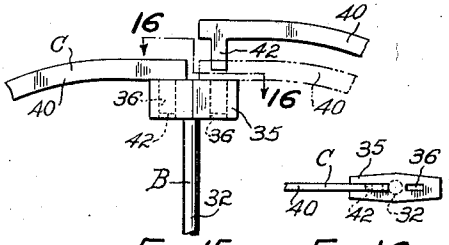

FIG. 15 FIG. 16

INVENTOR.
MORRIS LANGE
BY Morton L Brockman
ATTORNEY.

Patented Jan. 9, 1940

2,186,533

UNITED STATES PATENT OFFICE

2,186,533

CURTAIN SUPPORT

Morris Lange, Cleveland, Ohio, assignor to The Superior Funeral Supply Company, Cleveland, Ohio

Application September 23, 1938, Serial No. 231,384

4 Claims. (Cl. 45—106)

This invention relates to supports for curtains and particularly to the collapsible or folding type of framework suitable for hanging the draped backgrounds used in funeral parlors.

The principal object of the invention is to provide a simple, compact and light weight folding stand which may be readily adjusted as to height and width.

Another object is to provide a device of the type mentioned which may be readily set up or taken down by one person who need not be particularly skilled in the art, and without a loss of time or other inconvenience.

A further object is to provide such device with cross arms which are formed to receive a prefabricated drape.

Still another object is to provide a drapery support of the type mentioned with a lighting fixture suitable for illuminating the foreground.

These and other objects and features of the invention will become apparent from a reading of the following description and claims together with the accompanying drawings in which like parts are designated by like reference characters and wherein:

Figure 1 is a partial rear view of the support with curtains suspended therefrom;

Figure 2 is a front view of the Figure 1;

Figure 3 is a rear view of the assembled frame;

Figure 4 is a side view of the partially assembled frame;

Figure 5 is a horizontal sectional view of the frame taken along the lines 5—5 of the Figure 4;

Figure 6 is a view of a portion of Figure 5 showing a part of the lighting fixture and the clamp for attaching the same to the support;

Figure 7 is a rear elevation of the Figure 6;

Figure 8 is a front view of a removable scroll member to which is attached a side curtain panel;

Figure 9 is an enlarged elevation of part of a cross arm and part of a scroll member particularly showing the means of attaching them together;

Figure 10 is a sectional view taken along the lines 10—10 of the Figure 9;

Figure 11 is an elevation of the base member folded and the support member telescoped therein;

Figure 12 is an enlarged view of a part of the folding base member particularly showing spring clamp or snap hook for retaining same in an open position;

Figure 13 is a top view of a swivel joint on one of the folding cross arms;

Figure 14 is an elevation of the swivel joint shown in the Figure 13;

Figure 15 is an elevation of the top cross piece of the telescopic support showing two sockets and parts of the horizontal arm members engaged therein, and

Figure 16 is a top view of the cross piece referred to in the description of the Figure 15.

The present invention in general consists of the following parts; the folding base A, the telescopic support B, the folding horizontal arms C, the pre-formed removable scroll-like end members or hangers D attached to the arms, the lighting fixture E attached to the support, and the sections of textile curtain F suspended from the arms, the hangers and the fixtures. Each of the said parts will be hereinafter described in detail and in the order herein set forth.

The base A is a folding or collapsible tripod consisting of a tubular collar 20 to which are hinged the three legs 21. A smaller collar 22 is suspended below the collar 21 by the brace members 23 which are hinged to the collar 22 and to the legs 21 in a manner which spreads or spaces the legs 21 as the collar 22 is raised or lowered or drawn to or separated from the larger tubular collar 20. In order to prevent the base A from moving or tipping, one of the legs 21*a* has attached to it a small horizontal foot 24 upon which some heavy object may be placed. This is usually the bier on which the casket is displayed before the curtain F. Also, in order to prevent the base from collapsing unintentionally a snap clamp or hook 25 is hinged to the collar 20 with a spring 26 so arranged that when the collar 22 approximates the collar 20, the hook 25 automatically grasps and holds the two collars together until manually released or separated.

The support B is merely a series of tubes and a rod telescopically assembled. The large lower tube 30 fits into the collars 20 and 22 of the base A and receives the small upper tube 31. The rod 32 similarly fits and slides into the small tube 31. The tops of each of the tubes 30 and 31 are equipped with thumb screw fasteners 33 and 33*a* respectively, so the height or extension of the tubes 30 and 31 and the rod 32 may be adjusted or varied as needed. The lower tube 30 is fastened to the lower collar 22 with the pin 34, while the upper collar 20 is slideable up and down on it. This is clearly illustrated in the views of Figures 4, 11 and 12. The apex of the rod 32 is provided with a cross piece 35 which has two parallel rectangular vertical sockets 36, the open-

ings of which are at the top. The Figures 15 and 16 clearly illustrate this feature.

There are two folding horizontal arms C and each is similar in shape, size and construction. Each arm member consists of a long or inside member 40 and a short or outside member 41. The long inside arm 40 has a downwardly extending lug 42 which fits one of the sockets 36. The extreme outside end of the short member 41 is provided with a threaded bolt and a wing-nut 43 and the two arms 40 and 41 are swivelly connected by the threaded pin and wing-nut 44. The Figures 13 and 14 illustrate how the arms 40 and 41 are swivelly joined together.

The scrolls or hangers D are spirally curved metal strips 50, the outer ends of which are provided with simple slotted sockets 51 which engage the extreme ends of the short arms 41. The bolt and wing-nut 43 securely holds the arm 41 in the socket 51. The assembled arms 40 and 41 and the attached scroll 50 are all pre-shaped and pre-fabricated for the outline and design desired for the curtains to be hung thereon. This feature is clearly illustrated in the Figure 8.

The lighting fixture E is a long metal trough-like member 60 the inside of which is polished and the front side 65 of which is flat and slightly inclined to reflect the light upward. The inside of the trough 60 is provided with suitable electric light sockets or other means for retaining and contacting the long narrow type of electric light bulbs 61. To the sockets there is attached the conventional cord and plug 62 for connection to the current supply. The trough-like member 60 is closed at both ends, and mid-way between the ends there is attached a pinch-clamp 63. The pinch-clamp 63 is hinged and is equipped with a bolt and wing-nut 64 to hold it rigidly to the support B and is easily attached or detached. The pinch-clamp 63 is attached so that the opening of the trough-like member is horizontal, faces upward and is in the center of the frame. The height of the fixture E may be regulated by the positioning of the pinch-clamp 63. The Figures 6 and 7 clearly illustrate the design and construction of the pinch-clamp 63 and the Figures 4 and 5 show the manner of attaching the fixture E to the support B.

The curtain F consists of several sections or panels. The center section 70 is made in one piece and is shaped and shirred across the top to conform to the configuration of the two right and left arm members 40 and 41 and is also made to accommodate the extension therethrough of the pinch-clamp 63 of the light fixture E.

The two right and left side curtain panels 72 are suspended similarly from the scrolls D. However, it has been found in practice that considerable time and effort is saved by permanently attaching the curtain panels 72 to the pre-formed scroll-like end hangers D; and also considerable material is saved by having just a limited amount of the material hang from the rear of the scroll D, as that part of the panel is not ordinarily visible. The construction of the side curtain panels 72 is shown in the Figure 8.

The lower curtain front or middle drape 73 is similarly fringed and shirred across the top and is provided with hooks 71 so that it can be suspended from the side 65 of the trough member 60. When so suspended the lighting fixture E is entirely covered and concealed from view, the reflected light only being apparent when the assembled drapery support is viewed from the front. This feature is quite clearly illustrated in the Figures 1, 2, 4 and 5 of the drawings.

It should be noted that the herein described drapery support may also be used without the lighting fixture E and the middle drape 73 if desired. For that reason the center section 70 of the curtain is made the full length.

As conducive to a clearer understanding of this invention it may be well to point out that undertakers are frequently called upon to set up biers in private homes or halls and therefore a compact, light-weight collapsible device that has the appearance of a heavy permanent structure is often highly desirable. Also it is advantageous to have a frame that can be adjusted as to height and width to meet unusual conditions. The device herein described may be conveniently set up by one inexperienced person with little delay and also may be dismantled without loss of time.

It will now be clear that there is provided by this invention a curtain support which accomplished the objects of the invention. While the invention has been described in its preferred form and while certain general terms and specific language have been used, it is to be understood that the embodiment of the invention as described is illustrative only and is not to be considered in a limiting sense. It is to be further understood that there are other forms of the invention which will suggest themselves to persons making, using or selling similar devices and those modifications as well as the modifications of the illustrated form are all considered to be within the broad scope of the invention as no limitations upon it are intended other than those imposed thereon by the scope of the appended claims.

I claim:

1. A draped background for funeral biers, including a vertical support having curtain carrying means at its top, curtains connected to and suspended from said carrying means, a horizontal member formed to receive lights for disposition in front of the curtains, means carried by the member and extending through the curtains and rearwardly thereof to support the member, means to adjustably connect the member supporting means to the vertical support to enable the member to be disposed in varying vertical positions, front curtains having upper parts disposed adjacent the upper portion of the member, and means to connect the front curtains to the member, said means for connecting the member to the support, being detachable whereby to enable the background to be used with the member and its curtains removed.

2. A draped background for funeral biers, in accordance with claim 1, wherein the horizontal member consists of a trough and wherein the front curtain extends over the front of the trough to conceal the latter, and wherein there are hooks which engage over the top edge of the front of the trough for detachably connecting the front curtains to the trough.

3. A draped background for funeral biers consisting of a support, a curtain carrying means at the top of the support and connected to the latter, substantially spirally curved members at the ends of the curtain carrying means and connected thereto, curtains connected to the curtain carrying means and depending therefrom, curtains connected to the front and outer side portions of the curved members, and short curtains attached to the rear portions of the curved members whereby to impart a continuous curtained

effect when viewed from the front and top portions of the curved members.

4. A draped background for funeral biers, including a vertical support having a central top member, curtains connected to and suspended from said top member, side members foldably connected to the ends of the central member and having substantially spirally curved outer end portions, curtains connected to and depending from the front and outer side portions of the curved portions, short curtains connected to the rear portions of the curved portions and depending therefrom whereby to impart a continuous curtained effect when viewed from the front and top portions of the curved portions, a horizontal member formed to receive lights for disposition in front of the curtains of the central and side members, means carried by the horizontal member and extending rearwardly through the curtains to support the horizontal member, means to adjustably connect the supporting means to the vertical support to enable the horizontal member to be disposed in varying vertical positions, a front curtain having upper parts disposed adjacent the upper portion of the horizontal member, and means to connect the last named curtain to the horizontal member, said means for connecting the horizontal member to the support being detachable whereby to enable the background to be used with the horizontal member and its curtain removed.

MORRIS LANGE.