Nov. 12, 1968 H. PAPST 3,410,510

BOUNDARY LAYER CONTROL

Original Filed Dec. 23, 1963 4 Sheets-Sheet 1

Fig. 1

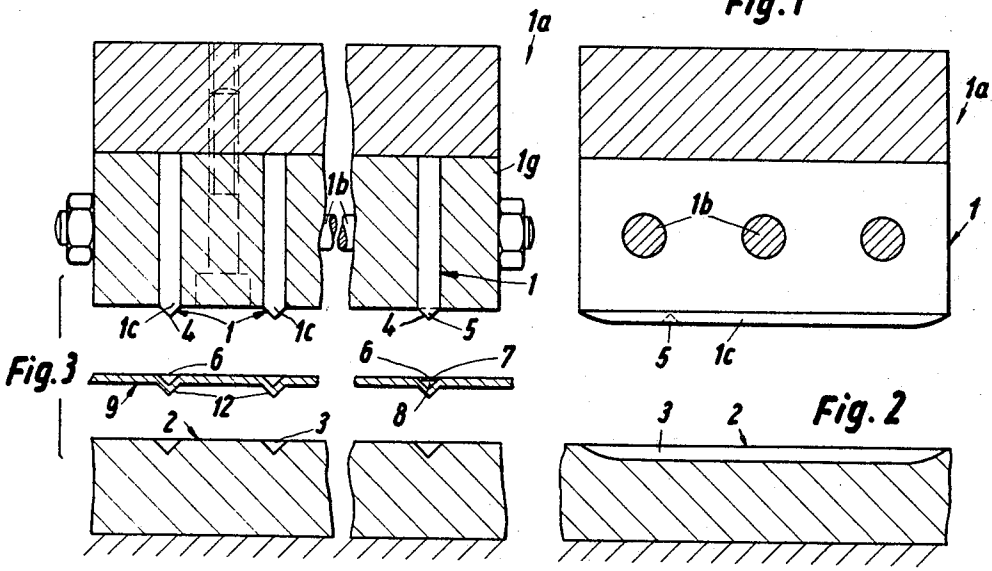

Fig. 3

Fig. 2

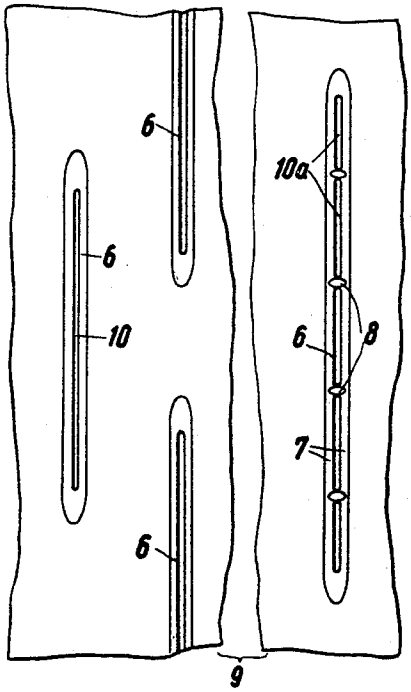

Fig. 4

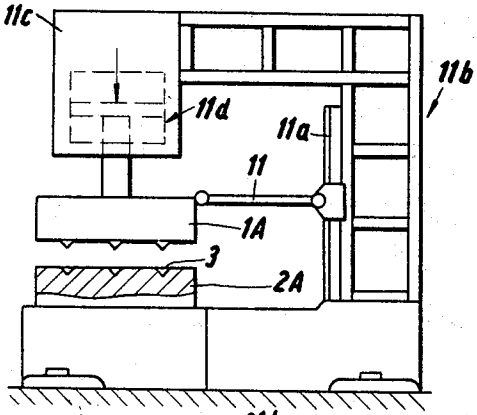

Fig. 5

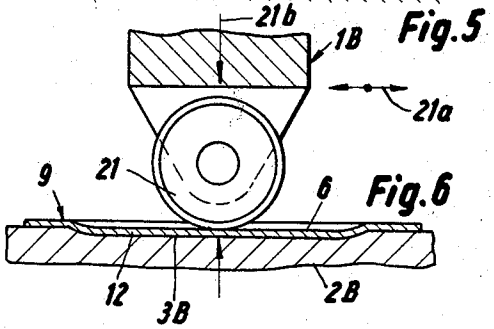

Fig. 6

Inventor:
HERMANN PAPST
BY Michael S. Striker
his ATTORNEY

Nov. 12, 1968 H. PAPST 3,410,510

BOUNDARY LAYER CONTROL

Original Filed Dec. 23, 1963 4 Sheets-Sheet 2

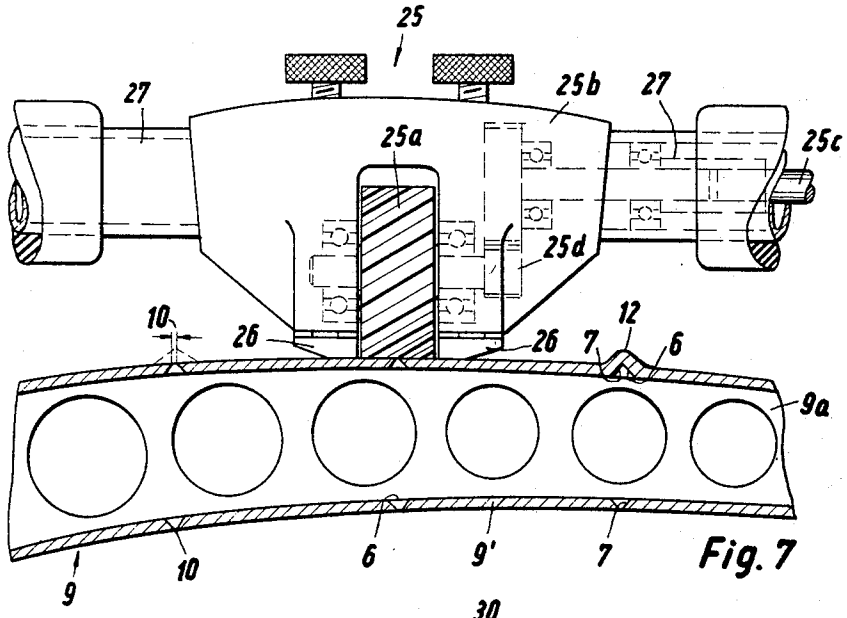

Fig. 7

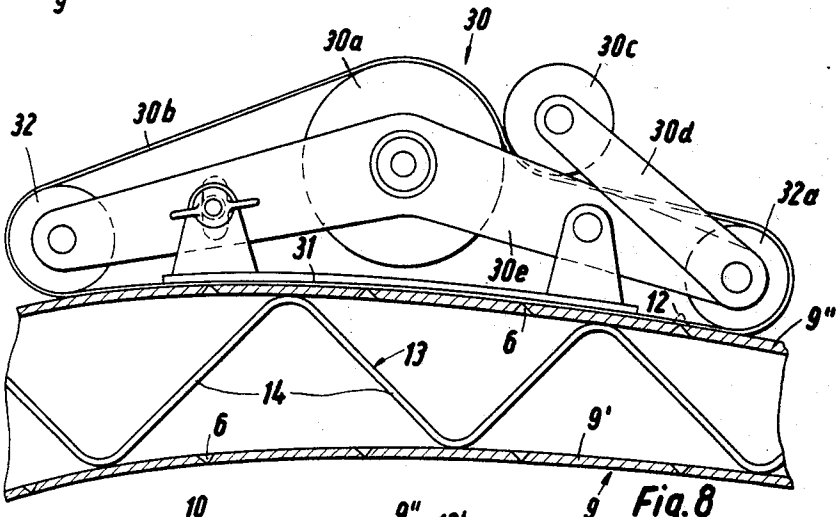

Fig. 8

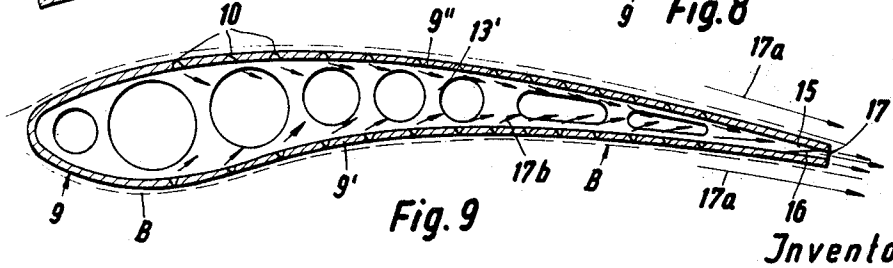

Fig. 9

Inventor:
HERMANN PAPST
BY Richard J. Striker
his ATTORNEY

Nov. 12, 1968 H. PAPST 3,410,510

BOUNDARY LAYER CONTROL

Original Filed Dec. 23, 1963 4 Sheets-Sheet 3

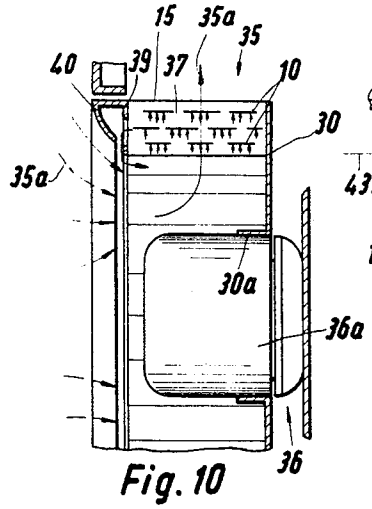

Fig. 10

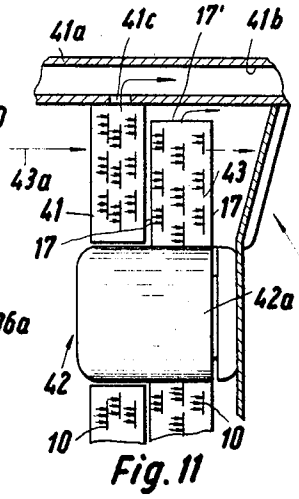

Fig. 11

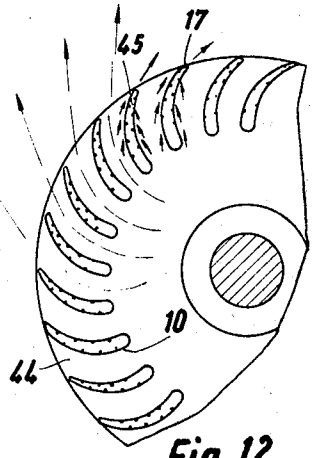

Fig. 12

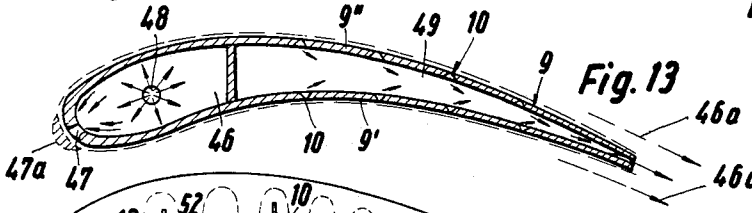

Fig. 13

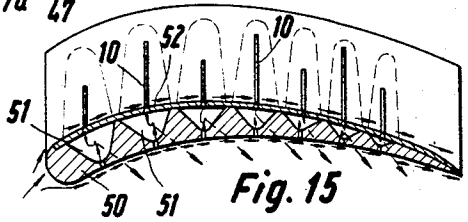

Fig. 15

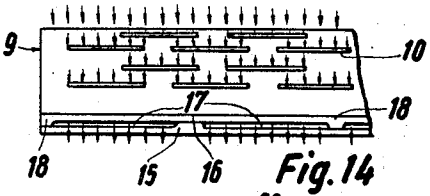

Fig. 14

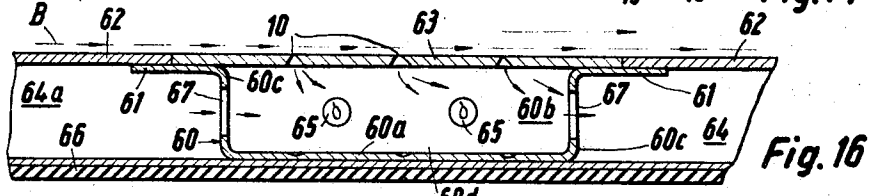

Fig. 16

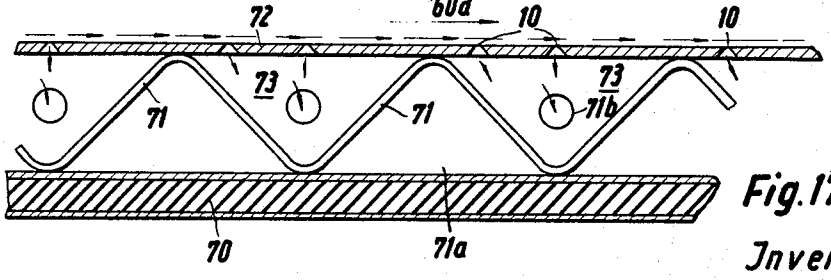

Fig. 17

Inventor:
HERMANN PAPST
BY Michael S. Striker
his ATTORNEY

Nov. 12, 1968 H. PAPST 3,410,510

BOUNDARY LAYER CONTROL

Original Filed Dec. 23, 1963 4 Sheets-Sheet 4

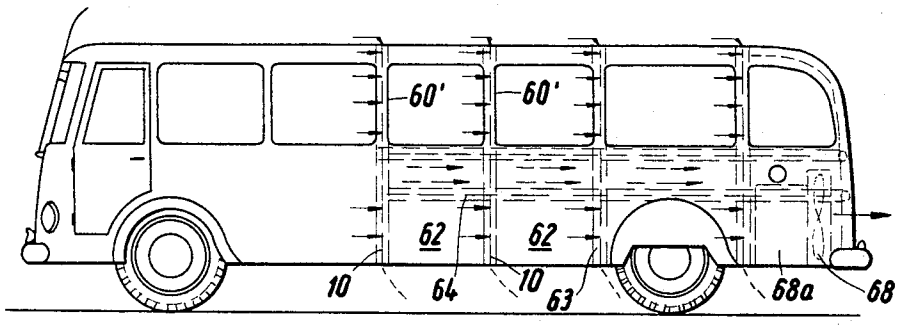

Fig. 18

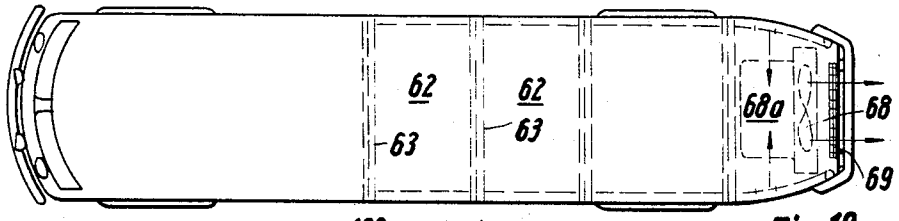

Fig. 19

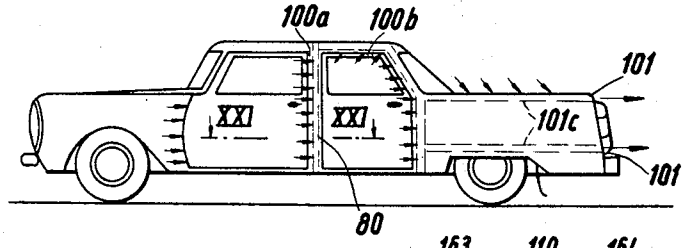

Fig. 20

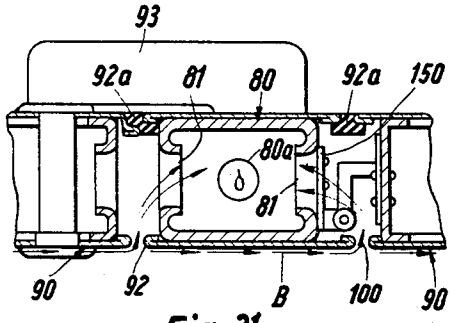

Fig. 21

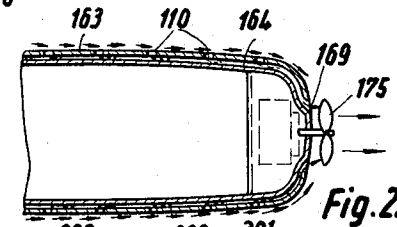

Fig. 22

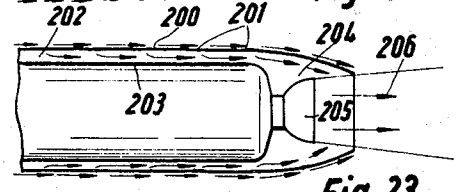

Fig. 23

Inventor:
HERMANN PAPST
BY Michael J. Striker
his ATTORNEY

United States Patent Office 3,410,510 Patented Nov. 12, 1968

3,410,510

BOUNDARY LAYER CONTROL

Hermann Papst, 7742 St. Georgen, Black Forest, Germany

Original application Dec. 23, 1963, Ser. No. 332,619. Divided and this application Mar. 16, 1966, Ser. No. 534,733
Claims priority, application Germany, Dec. 24, 1962, P 30,859
5 Claims. (Cl. 244—130)

The present application is a division of my copending application Ser. No. 332,619, filed Dec. 23, 1963, now abandoned and entitled, "Boundary Layer Control Means and Method of Producing the Same."

The present invention relates to profiled bodies which come in direct contact with fluid streams, and more particularly to improvements in means for controlling the boundary layer which develops along the outer surfaces of such profiled bodies. Specifically, the invention relates to boundary layer control means which is suitable for use in gliders, all kinds of automotive vehicles, blowers, turbines and many other types of machines wherein at least some component parts come in direct contact with fluid streams.

The problems which arise as a result of the fact that a thin layer of air or water will develop along the exposed surfaces of fuselages, wings, propeller blades, vanes and similar profiled bodies are well known to designers of vehicles, blowers and turbines. Attempts to utilize porous skins have met with little success because the pores will become clogged after comparatively short periods of exposure to a fluid stream and because such pores reduce the smoothness of the skin so that the fluid stream meets greater resistance even if the boundary layer is eliminated. Also, a porous skin is weaker than a non-permeable skin.

Accordingly, it is an important object of the present invention to provide a novel skin construction which is configurated in such a way that it eliminates at least some strata of the boundary layer which develops along the exposed surfaces of airfoils, fuselages, chassis, cowlings, shells and similar profiled bodies which come in direct contact with fluid streams.

A further object of the invention is to provide a profiled body whose skin is constructed and mounted in such a way that it prevents the loosening of boundary layers and that it may simultaneously perform at least one additional function, such as to cool the profiled body, to prevent entry of combustion products into the passenger compartment of a vehicle.

An additional object of my invention is to provide a profiled body which is provided with improved boundary layer control means of the above outlined characteristics and wherein the provision of such boundary layer control means adds little to the initial cost of the profiled body.

A concomitant object of the instant invention is to provide improved boundary layer control means which does not appreciably affect the strength of the profiled body, which may be manufactured and finished in conventional machines, and which may eliminate the boundary layer on all or on selected surface portions of a profiled body.

Still another object of the invention is to provide an improved outer covering or skin for airfoils, fuselages, chassis, cowlings, shells and similar profiled bodies, and to construct the covering in such a way that it permits entry of boundary layer into the interior of the profiled body but is not likely to be clogged by solid or liquid impurities which are contained in the fluid stream.

A further object of the invention is to provide an outer covering which need not consist of porous material and

which need not be slotted or apertured in order to eliminate at least some strata of the boundary layer from the chassis of an automotive vehicle or a similar conveyance.

Another object of the invention is to provide an airfoil, such as a wind, propeller blade or vane, which embodies the boundary layer control means of the present invention.

With the above objects in view, one feature of my invention resides in the provision of a profiled body which is arranged to be placed into a fluid stream so that a boundary layer develops during relative movement between said body and the fluid stream. Such body will define an internal space, such as may be the case in a blade, vane, wing, chassis, cowling, fuselage or similar body, and will comprise an outer covering such as a sheet of skin material, having an outer side along which the boundary layer develops and an inner side. This covering will further be provided with a plurality of elongated narrow slots whose width essentially increases in a direction from said outer side toward said inner side so that the boundary layer may enter the space through these slots caused by the essentially increasing of their width by deflection at an angle of substantially less than 90 degrees. When a body of the type in question is constructed by placing a sheet of such skin material around the skeleton frame of an airfoil in such a way that the narrower ends of the slots are located at the outer side of the thus obtained outer covering or skin, any foreign matter which will eventually penetrate into the slots cannot remain therein because the width of the slots essentially increases inwardly. Also, each slot is preferably bounded by inclined faces which diverge inwardly, i.e., in a direction from the exposed side toward the concealed side of the skin so that, and if the pressure in the interior of the airfoil is less than the pressure of the surrounding fluid, the boundary layer is actually sucked into the body and undergoes minimal deflection (substantially less than 90 degrees) while flowing through the slots. The slots are preferably but need not always be perpendicular to the direction of fluid flow, and they may be staggered with reference to each other so as to insure that the boundary layer may be removed from all sections of the outer surface.

The sharp edges of the skin at both sides of each slot will actually peel the boundary layer and will compel it to penetrate through the slots and into the interior of a profiled body in which the skin is used as an outer covering.

If the outer side of the skin is thereupon coated with one or more layers of lacquer, paint or the like, such materials cannot clog the slots because the width of the slots increases in a direction from the inner side to the outer side of the skin.

The novel features which are considered as characteristic of the invention are set forth in particular in the appended claims. The improved boundary layer control means itself, however, both as to its construction and the method of producing the same, together with additional features and advantages thereof, will be best understood from the following detailed description of certain specific embodiments with reference to the accompanying drawings, in which:

FIG. 1 is a vertical section through a ram constituting one shaping die of an embossing apparatus for the production of skins which embody the boundary layer control means of the present invention;

FIG. 2 is a section through a matrix which constitutes another shaping die of the embossing apparatus;

FIG. 3 is a vertical section through the embossing apparatus showing the ram in idle position and further

showing a portion of a skin which is deformed by the working ends of embossing tools on the ram;

FIG. 4 is a fragmentary side elevational view of a finished skin;

FIG. 5 illustrates a portion of a modified embossing apparatus with the matrix partly broken away;

FIG. 6 illustrates a third embossing apparatus wherein the ram carries a roller-shaped embossing tool;

FIG. 7 is a front elevational view of a milling machine which is utilized for removing ridges from a skin which forms the outer covering of an airfoil;

FIG. 8 is a side elevational view of a polishing machine which is used for precision finishing of the skin after the skin has been treated by the milling machine of FIG. 7;

FIG. 9 is a transverse section through a modified airfoil which comprises a skin of the type shown in FIG. 8;

FIG. 10 is a fragmentary axial section through a radial blower whose blades are provided with skins embodying my invention;

FIG. 11 is a fragmentary axial section through an axial blower whose blades and vanes are constructed in a manner as shown in FIG. 9;

FIG. 12 is a fragmentary front elevational view of an impeller whose blades resemble the airfoil of FIG. 9;

FIG. 13 is a section through a turbine blade which is provided with a skin of the type shown in FIG. 4;

FIG. 14 is a fragmentary front elevational view of a modified blade;

FIG. 15 is a section through a different turbine blade;

FIG. 16 is a fragmentary section through the fuselage or chassis of a conveyance which comprises an outer covering embodying the boundary layer control means of my invention;

FIG. 17 is a similar section through a modified fuselage or chassis;

FIG. 18 is a side elevational view of a bus whose chassis is constructed in accordance with my invention;

FIG. 19 is a top plan view of the bus;

FIG. 20 is a side elevational view of a passenger automobile whose chassis is constructed in accordance with my invention;

FIG. 21 is an enlarged horizontal section as seen in the direction of arrows from the line XXI—XXI of FIG. 20;

FIG. 22 is a section through the rear portion of a watercraft whose hull is constructed in accordance with my invention; and

FIG. 23 is a section through the tail end of a jet engine whose wall structure embodies my invention.

To facilitate understanding of the invention I have shown in FIGS. 1–3 and 5–8 various devices which may be used in making my boundary layer control means, whereas the remaining figures illustrate the outer covering or skin itself and various applications to which it may be put.

Referring to FIGS. 1 to 3, there is shown an embossing apparatus which comprises a set of shaping dies including a matrix **2** whose upper side is provided with elongated grooves **3**, and a ram **1***a* having a plurality of embossing tools **1** detachably secured thereto by a series of bolts **1***b* so that the precision-finished, smooth-surfaced, wedge-shaped elongated working ends **1***c* of the tools **1** register with the grooves **3**. The ram **1***a* is reciprocable toward and away from the matrix **2**, or vice versa, whereby the working ends **1***c* deform a skin **9** which is placed onto the upper side of the matrix so as to overlie the grooves **3**. This skin is a sheet of aluminum alloy and the working ends **1***c* impress in the upper side thereof a series of staggered but parallel depressions **6** of triangular cross section whereby the underside of the sheet is provided with complementary ridges **12**. The height of the working ends **1***c* exceeds slightly the thickness of the skin **9** so that the depth of each depression **6** also exceeds the thickness of the skin. The depressions **6** are bounded by

smooth inclined faces **7** which diverge in a direction from the underside toward the upper side of the skin **9**. Subsequently, the ridges **12** are removed by a suitable milling, polishing, grinding or planing machine (two embodiments of such machines will be described in connection with FIGS. 7 and 8) whereby the skin is formed with narrow slots **10**, see FIG. 4, whose width increases in a direction from the underside toward the upper side of the sheet material. The ridges **12** are removed in such a way that the underside of the skin **9** is smooth and that it merely shows the narrower ends of the slots **10**. The upper side of the skin is provided with the depressions **6** whose longitudinal ends are preferably rounded in a manner shown in FIG. 4, and such roundness is due to the configuration of grooves **3** in the upper side of the matrix **2**.

If the slots **10** are comparatively long, at least some of the working ends **1***c* may be provided with channels **5** extending transversely of the edges **4** so that the material of the skin **9** forms a series of webs **8**, shown in FIG. 4, which divide the respective slot into a series of aligned sections **10***a*. The webs **8** improve the resistance of the skin to bending or twisting stresses and such webs are of particular advantage when the slots are comparatively long, when the slots are closely adjacent to each other, and/or when the material of the skin **9** is readily deformable. The slots are staggered in such a way that they extend along the full length or width of the skin **9**, depending on the position of the skin on a profiled body which is placed into a fluid stream. For example, and if the skin of FIG. 4 forms the outer covering of an airplane wing, the wing moves in a direction from the left to the right, or vice versa, so that the slots **10**, **10***a* extend substantially transversely of the fluid stream and at least some strata of the boundary layer developing along that side of the skin which is exposed to the fluid stream will flow continuously and with minimal deflection first through the slots and thereupon along the other side of the skin. In actual use, the outer side of the skin is that side from which the inclined faces **7** diverge outwardly, i.e., in FIG. 3 the outer side is the underside of the skin **9**, and FIG. 4 shows the inner side of this skin. The inclined faces **7** direct the strata of the boundary layer during their flow through the slots **10**, **10***a* and insure that the boundary layer must be deflected through an angle of substantially less than 90 degrees. This reduces turbulence in the interior of the profiled body.

When the working ends **1***c* penetrate into the upper side of the skin **9**, and when the embossing apparatus is closed, the skin is held flat between the underside of the ram **1***a* and the upper side of the matrix **2** so that the surfaces of the skin remain smooth and that the working ends **1***c* merely shift certain layers of the material of the skin. The height and the inclination of surfaces on the working ends **1***c* will determine the width of the slots **10**, i.e., the same embossing apparatus may be used for forming different slots merely by exchanging the embossing tools. The lower part of the ram **1***a* carries a series of spacer elements **1***g* which enable the operator to change the distance between the embossing tools **1** so that the ram may be used with different matrices. All such features contribute to greater versatility of the embossing apparatus.

The working ends **1***c* will not sever or rip through the material of the skin but merely cause plastic deformation of its material. Since the faces of the working ends **1***c* are smooth, they cannot produce fissures or similar defects in the skin, especially since the upper side of the matrix is preferably finished with great precision. The slots **10**, **10***a* are not likely to become clogged by paint, lacquer, rain, dust, sleet or snow because they diverge inwardly so that any matter which has penetrated through the narrow outer ends of the slots is free to enter the interior of the profiled body which is surrounded by the skin. This is of particular importance in road vehicles and in watercraft wherein the outer covering is exposed

to dust, mud or water, and such configuration of the slots is of equal importance when the outer covering is coated with paint, lacquer or the like.

FIG. 5 illustrates a modified embossing apparatus which is especially suited for shaping of large skins such as may form part of the fuselage or wings in an airplane or the outer covering of another vehicle, e.g., an automobile, bus, truck, glider, boat or the like. The apparatus comprises one, two or more reciprocable rams **1***a* which are guided by one or more arms **11** and which cooperate with one or more fixed matrices **2***a*. The arms **11** are slidable along vertical ways **11***a* mounted on a frame **11***b*, and this frame comprises an overhanging head **11***c* which accommodates a hydraulic or pneumatic reciprocating mechanism **11***d* for the rams **1***a*. The matrices **2***a* and the rams **1***a* may be located in inclined planes, depending on the configuration and dimensions of the skins to be treated.

If desired, the fluid-operated reciprocating means **11***d* may be replaced by a simple lifting mechanism which serves to move the rams **1***a* away from the matrices **2***a* whereupon the rams are released to descend by gravity and to thereby deform a sheet which overlies the matrices. However, it is normally advisable to provide hydraulic or pneumatic reciprocating means which cause the rams to descend at high speed and to strike against a skin with a force sufficient to produce the ridges **12** in a single operation. It is also possible to deform the skin by pressure waves produced by impulse generators or explosions while the skin is immersed in a fluid medium.

FIG. 6 illustrates a third embossing apparatus wherein the matrix **2***b* cooperates with a ram **1***b* which carries one or more roller-shaped embossing tools **21**. The skin **9** is placed onto the upper side of the matrix **2***b* and the tool **21** is caused to move in the longitudinal direction of the groove **3***b* (see the double-headed arrow **21***a*) while the ram **1***b* exerts a pressure in a direction toward the matrix (arrow **21***b*). The tool **21** may be moved back and forth only once or more than once, depending on the thickness and rigidity of the skin **9**.

Referring to FIG. 7, there is shown a portable milling machine **25** having a rotary milling cutter **25***a* which serves to remove the ridges **12**. The cutter **25***a* travels between pairwise arranged guide rollers **26** and its housing **25***b* comprises two handles **27** which may be grasped by hand to move the milling machine in the longitudinal direction of the ridges **12**. One of the handles **27** accommodates or carries a motor (not shown) which drives a shaft **25***c* serving to rotate the cutter **25***a* through a gear train **25***d*. The skin **9** forms the outer covering of an airfoil and is applied to the skeleton frame **9***a* of the airfoil in such a way that the ridges **12** extend beyond the outer side thereof, i.e., beyond that side which is exposed to the fluid when the airfoil moves with respect to a fluid stream or vice versa. The edges of the milling cutter **25***a* remove all such material which extends beyond the outer side of the undeformed (non-embossed) portion of the skin **9** whereby the skin is provided with narrow slots **10** which are substantially parallel with the leading and trailing edges of the airfoil. Each slot **10** diverges in a direction from the outer side toward the inner side of the skin **9** and each such slot is bounded by two smooth inclined faces **7**. An important advantage of the just described mode of assembling and finishing the air foil of FIG. 7 is that removal of the ridges **12** takes place simultaneously with thorough and precise finishing of the exposed side of the skin **9**. Since such precision finishing is normally needed irrespective of the provision of boundary layer control means, removing the ridges **12** does not consume any additional time because it is incidental to precision-treatment of the skin. The rollers **26** prevent penetration of the cutter **25***a* into the non-deformed portions of the skin, and FIG. 7 shows that the lower panel **9′** of the skin **9** is already free of ridges **12** so that it merely exhibits a series of suitably distributed slots **10**.

If the skin must be finished with utmost precision, one can resort to a grinding or polishing machine **30**, for example of the type which is shown in FIG. 8. This machine may be used in addition to or as a substitute for the milling machine **25** and comprises an endless grinding or polishing belt **30***b* which is trained around rollers **30***a*, **32**, **32***a* to travel across the slots **10**. One of these rollers is driven in a manner not forming part of my invention, and the belt **30***b* is tensioned by a fourth roller **30***c* which is mounted on a spring-biased arm **30***d*. The frame **30***e* of the machine **30** carries an arcuate deflector **31** which is adjustable and which bears against the inner side of the belt **30***b*. The curvature of the deflector **31** corresponds to the curvature of an upper panel **9″** forming part of a skin **9** which surrounds the skeleton frame of the airfoil. When the machine **30** polishes the lower panel **9′** of the skin **9**, the operator replaces the deflector **31** by a differently configurated deflector. Alternatively, the deflector **31** may consist of elastically deformable material so that it follows the outline of the panel **9′** or **9″**.

The skeleton frame of the airfoil comprises a transversely extending corrugated frame member **13** whose sections **14** extend between the panels **9′**, **9″**. If the structure shown beneath the machine **30** forms part of a fuselage, the member **13** is a bulkhead and forms an annular stiffener whose inner and outer sides are respectively surrounded by tubular skins **9′**, **9″**.

Finishing of the airfoil of FIG. 7 or 8 may be carried out as follows: First, the embossed skin **9** is stretched onto and is connected with the skeleton frame **9***a* or **13** so that its ridges **12** extend outwardly. These ridges are then removed by the milling cutter **25***a* and, finally, the outer side of the skin is precision-finished by the belt **30***b*. If the material of the belt can remove the ridges **12** without previous milling, the machine **25** may be dispensed with.

It goes without saying that the ridges **12** may be removed by many other types of existing milling, grinding or planing machines, and that such ridges may be removed before the skin is mounted on a skeleton frame. For example, one may utilize automatic milling machines with copying means or a large skin may be treated simultaneously by two or more automatic, semiautomatic or portable machines.

The length of slots **10** should be selected in such a way that the edges bounding each slot remain parallel to each other even if the skin **9** is deformed, for example, at the time it is applied around the skeleton frame of an airfoil, chassis, cowling, fuselage or the like. As a rule, the width of the slots **10** need not substantially exceed one millimeter and may be a small fraction (one or more tenths) of a millimeter.

It is normally preferred to remove the ridges **12** subsequent to deformation of the skin **9**, especially if the skin consists of thin and readily deformable sheet material, because the likelihood that the slots **10** would be of unequal width is more pronounced if the slots are formed prior to deformation (shaping) of the skin. It is also conceivable to form the slots **10** by grinding or by erosion with spark discharge, but such methods are costlier than the embossing method.

FIG. 9 illustrates in section an airfoil, e.g., the wing of an aircraft or a blade in a turbine or blower whose outer covering consists of a skin **9** which is provided with boundary layer control means embodying my invention. The skin comprises a lower panel **9′** and an upper panel **9″** both surrounding an apertured skeleton frame **13′**. The panels are provided with elongated knife blade-like edge portions **15** which extend along the trailing edge of the airfoil and which are held apart by spacer elements **16** so that the edges **15** define between themselves a series of orifices **17**. Such orifices are of advantage irrespective of

the exact configuration of slots **10** in the panels **9'**, **9''** as long as the skin **9** allows at least some strata of the boundary layer B (shown in broken lines) to enter the interior of the airfoil. When the airfoil is caused to move with reference to the fluid stream or vice versa, there develops a low-pressure zone immediately downstream of the orifices **17** so that the orifices actually suck fluid from the interior of the airfoil to draw the boundary layer through the slots **10**. The flow of the fluid stream is indicated by arrows **17***a* and the flow of the boundary layer B through the slots **10** is indicated by arrows **17***b*. Thus, the provision of orifices **17** results in increased flow of the boundary layer into and through the slots **10** so that the edges **15** actually form a suction nozzle which draws the boundary layer into the airfoil and which thereupon injects the thus accumulated body of fluid into the low-pressure zone along the trailing edge of the airfoil. In other words, the nozzle will cause deflection of the boundary layer so that at least some strata of this layer will penetrate through the slots **10** which extend transversely of the fluid stream.

FIG. 10 illustrates a portion of a radial blower **35** which comprises a series of hollow radially arranged blades **37**. One axial end of each blade **37** is welded to a disk **30** whose flange **30***a* is secured to the rotor **36***a* of an electric motor **36**. The other axial end **39** of each blade **37** is soldered to a hollow annulus **40** which rotates with the rotor **36***a* whereby the channels between the blades **37** receive streams of fluid from the suction side of the blower and such streams flow in directions indicated by the arrows **35***a*. The blades **37** are constructed in a manner as illustrated in FIG. 9 so that the inner strata of the boundary layer may enter through the slots **10** and are expelled through orifices defined by the nozzles **15** at the outer ends of the blades. The pressure in the channels between the blades **37** exceeds the pressure in the interior of the blades so that the boundary layer is compelled to enter the blades whereby the streams of fluid meet less resistance in flowing toward the pressure side of the blower with resultant increase in the efficiency and operating range of the blower. The slots **10** are substantially parallel to the axis of the rotor **36***a*.

FIG. 11 shows a portion of a multistage axial blower whose motor **42** includes a rotor **42***a* supporting a ring of moving blades **43** each constructed in a manner as illustrated in FIG. 9, i.e., each blade defines at least one orifice **17** located at the pressure side of the ring. The blades **43** cooperate with a ring of stationary vanes **41** which are also constructed in a manner as described in connection with FIG. 9 and which are located at the suction side of the blower. The vanes **41** are carried by a tubular support **41***a* which defines a duct **41***b* and comprises ports **41***c* through which fluid entering the slots **10** of the vanes **41** may be led away. The main streams of fluid flow in directions indicated by arrows **43***a*. Such strata of the boundary layer which enter through the slots **10** of the blades **43** are evacuated through the orifices **17** and flow toward the pressure side of the blower. The blades **43** are further provided with orifices **17'** at the outer ends thereof so that at least some fluid of the boundary layer will escape by centrifugal force when the motor **42** is in operation. The support **41***a* carries additional rings of stationary vanes (not shown) which discharge fluid into the duct **41***b*.

FIG. 12 illustrates a portion of an impeller wheel **44** which is provided with arcuate blades **45**. These blades are constructed in a manner as illustrated in FIG. 9, and each thereof has at its outer end an orifice **17**. When the wheel **44** rotates, the fluid which enters through the slots **10** of the blades **45** is expelled through the orifices **17** to increase the efficiency of the apparatus in which the impeller wheel is in use.

Referring to FIG. 13, there is shown a portion of a blade which is installed in a gas turbine, especially in a gas turbine which is used in connection with exceptionally hot fluids. The front portion of the blade defines a compartment **46** for a suitable coolant which is discharged through one or more openings **47** provided in the leading edge of the blade. There is a deflector **47***a*, located in front of the openings **47**, to direct thin streams of coolant along the outer sides of the panels **9'**, **9''** so that such streams separate the hot fluid (arrows **46***a*) from the panels. For example, the coolant which enters the compartment **46** may be air, water vapor, nitrogen, carbon dioxide or another non-oxidizing gas. The compartment **46** receives coolant through one or more nozzles **48** which discharge the coolant at high pressure so that a layer of such coolant will be caused to flow from the openings **47** along the outer sides of the panels **9'**, **9''** without causing any turbulence. The pressure of coolant entering **48** must exceed the pressure of the fluid stream which opposes the outflow of coolant through the openings **47**. It will be noted that the front portion of the skin **9** which surrounds the compartment **46** is not slotted.

The deflector **47***a* shields the coolant issuing from the openings **47** so that such coolant cannot meet the fluid stream head on and is automatically deflected to flow along the outer sides of the panels **9'**, **9''**. It was found that such coolant will form a coat at least along the upper panel **9''** when the turbine is in actual use.

As the layers of coolant continue to flow along the outer sides of the panels **9'**, **9''**, they are sucked through the slots **10** and enter the rear compartment of the blade to be expelled through the orifices at the trailing end in the same way as described in connection with FIG. 9. Thus, the layers of coolant form a protective coat which prevents direct contact between the stream of hot fluid and the material of the skin **9**. The skin **9** of FIG. 13 preferably consists of a nickel or chrome alloy and is treated in a manner as described in connection with FIGS. 1 to 8.

FIG. 14 shows the outer end portion of a hollow turbine blade wherein the leading edge is parallel with the trailing edge. The blade comprises a skin **9** which is formed with staggered slots **10**, and the panels of this skin form at the trailing edge a series of suction orifices **17**. The edges **15**, **16** of these panels are provided with spacer elements in the form of lugs **18** which are formed by removing the material at the inner sides of such edges to that each orifice extends between a pair of adjacent lugs **18**. Each lug **18** of one panel is welded to the other panel, preferably by an impulse welding process and in such a way that all lugs are welded in a single operation. Such mode of welding insures that any melting of the skin is restricted to immediate vicinity of the lugs. The blade of FIG. 14 is equally useful in aircraft, e.g., it may form the wing of an airplane.

FIG. 15 illustrates a portion of an airfoil, such as a blade in a turbine, a radial blower or the like. This blade comprises a forged skeleton profile **50** one side of which is provided with cutouts or grooves **51** extending toward the root of the blade. The cross-sectional area of each cutout increases gradually in a direction toward the tip of the blade so tht the blade can withstand substantial centrifugal forces and considerable bending or twisting stresses. The cutouts **51** are covered by a skin **9** having slots **10** which communicate with the cutouts so that the boundary layer may penetrate into the cutouts when the blade of FIG. 15 rotates. If desired, the profile **50** may be provided with additional cutouts at the underside thereof and the skin **9** then surrounds both sides of the profile. The skin preferably consists of high-quality metallic material and is welded to the profile **50**. The outer end of each cutout **51** is open and communicates with the surrounding atmosphere so that the material of the boundary layer is free to escape when the blade rotates. It was found that the blade of FIG. 15 will not vibrate when it is used in a turbine or a similar fluid displacing machine.

FIGS. 16 to 23 illustrate additional structures in which the boundary layer control means of my invention may be put to use. FIG. 16 is a section through the framework

or chassis of a railroad vehicle or bus which comprises a skeleton frame including a series of U-shaped bulkheads **60** (only one shown) each having two outwardly extending flanges **61**. The flanges **61** are welded to sheet metal sections **62** and to a skin **63** which is disposed between the sections **62** and is spaced from the web **60***a* of the bulkhead **60**. The skin **63** is provided with slots **10** which enable at least some strata of the boundary layer B to enter the space **60***b* betwen the skin **63** and web **60***a*. The legs **60***c* of the bulkhead **60** are formed with openings **67** and the bottom wall **60***d* of the bulkhead is provided with apertures **65** through which condensate or rain may escape from the space **60***b*. A channel **64** communicates with a suction nozzle or with the intake of a suction generating device (not shown) to draw the boundary layer through the slots **10**, through the righthand opening **67** and through the channel **64**. Thus, the space **60***b* is maintained at a pressure which is less than the pressure prevailing at the outer side of the skin **63** whereby the boundary layer is compelled to flow through the slots **10** and is led away through the channel **64**.

The web **60***a* is secured to an insulating wall **66** which may comprise several layers and which surrounds the passenger compartment or compartments of the vehicle. A second channel **64***a* collects the fluid of a boundary layer which is withdrawn through the slots of a second skin **63**, not shown in FIG. 16.

FIG. 17 illustrates a portion of a fuselage in an airplane. The inner wall **70** is reinforced by undulated bulkheads **71** which stiffen the fuselage and which are surrounded by an outer covering or skin **72** having slots **10** which diverge in a direction toward the inner wall **70**. Longitudinal stiffening members **71***a* are provided with openings **71***b* to discharge rain or condensate. The members **71***a* may be omitted if the inner wall **70** is capable of taking up all stresses not taken up by the bulkheads **71**. The spaces **73** between the illustrated bulkhead **71** and the skin **72** will receive streams of boundary layer and convey such fluid to a compressor which may deliver it into the passenger compartment. If desired, the boundary layer entering the spaces **73** may be withdrawn by a suction generating device to be delivered into the combustion chamber of a jet engine.

The skin **72** may consist of several sections which are preferably welded to the bulkhead **71**.

FIGS. 18 and 19 show a bus whose outer covering comprises sections **62** and skins **63**, the latter provided with slots **10** to permit entry of boundary layer into channels **64** which lead to the suction side of a cooling fan **68**. This fan cools the engine **68***a* which is installed in the rear end of the hollow chassis and expels the fluid through one or more suction nozzles **69**. It is normally sufficient if the skins **63** cover the reinforcing frame members or posts **60'** between the windows of the bus, and such frame members may be configurated in a manner as shown at **60** in FIG. 15. The channels **64** extend between adjacent frame members **60'** and insure that fluid entering the slots **10** may be collected by the fan **68** to be thereupon expelled at the tail end of the chassis. Of course, at least some of the sections **62** may be formed with additional slots to remove the boundary layer from zones extending between the skins **63**.

The streams of air flowing through the channels **64** will cool the chassis and the power requirements of the fan **68** are more than compensated for by reduced resistance which the vehicle meets owing to elimination of the boundary layer.

FIG. 20 shows a passenger automobile whose outer covering comprises sections or skins defining slots **100***a* for entry of the boundary layer along the outer sides of the frame members or posts **80** adjacent to the doors of the vehicle. Additional slots **100***b* are defined by skins which surround the rear windows. Such slots **100***a*, **100***b* are formed during making of the chassis when the sections of the outer covering are secured to the inner frame.

FIG. 21 shows that the post **80** is hollow and is formed with openings **81** (corresponding to the openings shown in FIG. 15) to permit entry of fluid which is sucked through the slots **100***a*. The post **80** is located between two doors **90** so that the openings **81** are concealed when the doors are closed. The air which forms the boundary layer B is drawn through the slots **101***a* between the outer covering **92** of the post **80** and the outer coverings of the doors **90** to flow into one or more nozzles **101** provided at the tail end of the vehicle. Channels **101***c* connecting the openings **81** (and hence the slots **101***a*, **101***b*) with the nozzles **101** are shown in FIG. 20.

Sealing strips **92***a* prevent entry of air into the passenger compartment at the inner side of the post **80**. The reference numeral **93** indicates a lock which secures the front door **90** to the chassis.

A check valve including a flap **150** of elastic material is provided to prevent exhaust gases from flowing through channels **101***c* and into the interior of the post **80**.

It will be noted that the boundary layer control means of my invention need not always comprise slots which are machined in a sheet material, i.e., it is equally possible to assemble the outer covering of a profiled body or vehicle in such a way that the slots are formed between adjacent sections or skins of the covering.

Some of the slots **100***b* need not extend exactly at right angles to the direction of fluid flow, and FIG. 20 shows that certain slots **100***b* are actually parallel or nearly parallel with the direction of forward movement of the automobile. Any moisture which might penetrate into the interior of the post **80** or into the channels **101***c* will be evacuated through apertures **80***a* (FIG. 21) or through the nozzles **101**.

The nozzles **101** may be distributed at the tail end of the vehicle in such a way that each thereof may expel some of the air which enters through the slots **101***a*, **101***b*. The slots may be provided in all such zones of the outer covering where the boundary layer might affect the performance of the vehicle. The system of channels **101***c* which convey air to the nozzles **101** may include several independent channels or a network of interconnected channels which extend through and/or between the elements of the chassis. If desired, the channels may communicate with the intake of a suction generating device so that the boundary layer is drawn not only by the action of nozzles **101** but is additionally compelled to enter the channels owing to greater difference in pressures prevailing around the covering and in the channels.

The upper suction nozzle **101** of FIG. 20 may serve to evacuate spent air from the rear part of the passenger compartment.

FIG. 22 illustrates the rear portion of a hull in a small watercraft, e.g., a motorboat, whose outer covering comprises a skin **163** having staggered slots **110** and surround an inner wall **164** so that the boundary layer entering through the slots **110** may be evacuated through nozzles **169** located in the region of the propeller screw **175**. The bulkheads (not shown) between the outer covering **163** and inner wall **164** are provided with openings so that the outer covering and the inner wall from one or more channels through which the boundary layer may escape at the rear end of the watercraft.

The propeller screw **175** may be surrounded by a tubular mantle (not shown) which also surrounds the nozzles **169**. The construction of the hull may resemble the construction shown in FIG. 16 or 17. The nozzles **169** are disposed at the suction side of the screw **175** so that the latter actually sucks the boundary layer through the slots **110**. It was found that the watercraft of FIG. 22 will meet less resistance than a watercraft without slots **110** because the fluid stream follows more closely the outline of the hull and the resistance normally offered by the boundary layer is reduced to a minimum. The slots extend substantially transversely to the direction of movement of the watercraft.

FIG. 23 shows a portion of a jet engine wherein a tubular outer covering or skin **200** comprises circumferentially extending slots **201**. The channels **202** between the outer covering **200** and a tubular inner wall **203** convey the boundary layer into the space **204** located downstream of the exhaust nozzle **205**. The jet **206** of exhaust gases creates suction which is felt in the vicinity of the nozzle **25** and in the channels **202** to draw the boudary layer through the slots **201**. Such suction is sufficiently strong to remove the boundary layer with resultant increase in efficiency of the jet engine. The fact that the outer covering **200** surrounds and extends beyond the exhaust nozzle **205** contributes greatly to stronger suction in the channels **202**. The wall structure including the covering **200** and the inner wall **203** is reinforced by bulkheads and longitudinal members, not shown.

Without further analysis, the foregoing will so fully reveal the gist of the present invention that others can, by applying current knowledge, readily adapt it for various applications without omitting features that fairly constitute essential characteristics of the generic and specific aspects of this invention and, therefore, such adaptations should and are intended to be comprehended within the meaning and range of equivalence of the following claims.

What is claimed as new and desired to be secured by Letters Patent is:

1. A skin construction for profiled bodies which are placed into a fluid stream so that a boundary layer develops during relative movement between such bodies and the fluid, comprising a sheet having an outer side along which the boundary layer develops and an inner side, said sheet further having narrow elongated slots whose width diminishes in a direction from said inner side toward said outer side so at the latter said slots have a constant width not exceeding 1 mm., said slots extending substantially transversely of the direction of movement of the fluid stream and being bounded by mutually inclined smooth planar side walls having sharp edges at said outer side and forming with the general plane of the latter an angle of up to 90 degrees so that the boundary layer may enter said narrow slots by deflection at an angle of substantially less than 90 degrees.

2. A skin construction as set forth in claim **1**, wherein said sheet comprises webs extending across at least some of said narrow slots to divide the respective slots into a plurality of sections.

3. A structure as defined in claim **1**, wherein said sheet constitutes an outer covering of said profile body and comprises a trailing portion which defines with an adjacent part of the profiled body nozzle means in communicaiton with said internal space so as to aspirate the boundary-layer fluid through said slots as a result of negative pressure caused in said internal spaced by the suction effect of fluid flowing externally about said nozzle means, and to subsequently evacuate the fluid which enters through said narrow slots.

4. A structure as defined in claim **1**, wherein said profiled body is an airfoil and wherein said sheet is provided with a plurality of said slots and the latter are staggered longitudinally with reference to one another.

5. A structure as defined in claim **1**, wherein said profiled body is the fuselage of an aircraft; and further comprising a skeleton frame at least partly surrounded by said sheet and including a plurality of bulkheads.

References Cited

UNITED STATES PATENTS

2,406,920	9/1946	Stalker	244—103 X
2,721,715	10/1955	Hoadley	244—130
2,821,351	1/1958	Utgoff	244—42
3,055,614	9/1962	Thompson	244—42 X
3,090,584	5/1963	Kuchemann et al.	244—42 X

FOREIGN PATENTS

945,397	5/1949	France.

MILTON BUCHLER, *Primary Examiner.*

B. BELKIN, *Assistant Examiner.*