(19) DANMARK

(10) DK/EP 2539877 T3

(12) Oversættelse af europæisk patentskrift

Patent- og Varemærkestyrelsen

(51) Int.Cl.: *G 09 F 9/33 (2006.01)* *G 09 F 13/22 (2006.01)*

(45) Oversættelsen bekendtgjort den: **2017-10-09**

(80) Dato for Den Europæiske Patentmyndigheds bekendtgørelse om meddelelse af patentet: **2017-08-30**

(86) Europæisk ansøgning nr.: **11706506.0**

(86) Europæisk indleveringsdag: **2011-02-21**

(87) Den europæiske ansøgnings publiceringsdag: **2013-01-02**

(86) International ansøgning nr.: **EP2011052517**

(87) Internationalt publikationsnr.: **WO2011104205**

(30) Prioritet: **2010-02-24 DE 102010009429**

(84) Designerede stater: **AL AT BE BG CH CY CZ DE DK EE ES FI FR GB GR HR HU IE IS IT LI LT LU LV MC MK MT NL NO PL PT RO RS SE SI SK SM TR**

(73) Patenthaver: **Siemens Aktiengesellschaft, Werner-von-Siemens-Straße 1, 80333 München, Tyskland**

(72) Opfinder: **FROST, Uwe, Stellingdamm, 9B, 12555 Berlin, Tyskland**
KÖSTER, Kay, Karl-Marx-Strasse, 07, 15370 Fredersdorf, Tyskland
Rolf Eckl, Schottburger Straße, 03 12305 Berlin , , Tyskland
Jan Oertel, Bodelschwinghstraße, 23 12437 Berlin Treptow , , Tyskland

(74) Fuldmægtig i Danmark: **Zacco Denmark A/S, Arne Jacobsens Allé 15, 2300 København S, Danmark**

(54) Benævnelse: **Symbolviser**

(56) Fremdragne publikationer:
EP-A2- 1 091 167
EP-A2- 1 352 544
WO-A2-02/15281
WO-A2-02/071812
US-A1- 2003 025 450

Description

The invention relates to a symbol indicator, in particular for rail-bound traffic routes, with LED modules for the pixel-based visualisation of the symbol and optical elements assigned to the LED modules, which are arranged on a front plate, wherein the LED modules are arranged such that they are inclined at an angle to the front plate and the optical elements are embodied as collimator lenses.

The explanations below essentially relate to symbol indicators for rail-bound traffic routes, without the claimed subject matter being limited to this application.

Symbol indicators for railway signalling and safety systems consist of a multiplicity of light dots arranged in grids - pixels. The symbols to be represented, for example digits or letters, are formed from a suitable arrangement of defined individual pixels. An electrical driver board is usually used to activate the symbol. The emission behaviour of the symbol indicator, in particular the light distribution, axial luminous intensity, colour and phantom protection, is subject to the field-proven requirements of rail operation.

The pixels of the symbol indicator are illuminated by different optical methods. In incandescent lamp systems, the light of a central signal lamp is coupled into an optical fibre bundle, distributed via the fibres thereof and transported to the front lenses of the pixels. By contrast, in LED systems, predominantly a plurality of LED light sources are used per pixel, but at least one LED light source per pixel. LED modules of this kind and the associated lenses are usually arranged in a compact construction directly on the front plate of the symbol indicator.

In principle, symbol indicators serve for transmitting information to approaching rail vehicles. This often involves safety-related information which must not be optically falsified or overlaid with extraneous light. The unwanted illumination or falsification of a pixel by the ingress of ambient light, e.g. sunlight or headlamp light, is referred to as a phantom effect. By way of the phantom effect, in extreme cases, a false indication can occur due to an untimely illumination of at least one pixel or a colour shift. This effect is particularly disturbing when LED modules are used as the light source, since LEDs can be stimulated to luminesce by incident light and, in the case of LED light sources, rear reflectors are often used. Apart from the known phantom generators which are predictable with projection, e.g. a low sun for signals in an east-west orientation, sporadic and unforeseen sources for phantoms also arise, e.g. vehicle or building lights, reflection at surfaces, e.g. on glazed facades or snow coverings. Thus even a symbol indicator which is intended to be phantom-proof due to its location can be phantom-prone.

In general, the attempt is made to minimise the phantom effect through shades, shields, the avoidance of east-west orientation or by the repetition of critical symbol indicators.

The reflection protection against ambient light is primarily realised in symbol indicators by the lens body of the individual pixel having an elongated form, wherein an opaque sheathing is provided, which absorbs the penetrating radiation. By way of the geometric construction of the elongated lens body, it can be achieved that almost all ambient light beams penetrating from outside at an angle of at least 10° are guided to the light-absorbing underside of the

lens body.

Symbol indicators with collimator lenses and LED modules arranged obliquely thereto are known from WO02/071812 A2 and WO02/15281 A2. The collimator lenses cause the light beams, which are generated by the LED and fall in obliquely to the optical axis of the collimator lens according to the angle of inclination, for example 7°, of the LED module with respect to the collimator lens, to be directed in parallel. This means that undesirable phantom light can also penetrate the collimator lens largely unhindered at angles of ingress below 10° and can be absorbed by housing parts of the LED module.

In known symbol indicators, the front plate is provided with apertures, which correspond to the light-emitting surface of a pixel. Symbol-dependent front plates of this kind, however, do not offer an optimal phantom protection, since the symbol to be indicated is affected by the corresponding arrangement of the front lenses in the front plate, with the result that the phantom effect is symbol-dependent and an illuminated, i.e. activated, symbol can be fabricated by reflections despite the symbol indicator being deactivated.

The object underlying the invention is to disclose a symbol indicator of the generic type, in which an impairment of safety as a result of the phantom effect can be largely avoided, wherein the intention is simultaneously to simplify assembly.

The object is achieved according to the invention in that the LED modules are arranged such that they are inclined at an angle to the front plate and the optical elements are embodied as collimator lenses.

To this end, the LED modules are advantageously able to be plugged into the front plate by means of a snap connection, wherein the LED modules have opaquely encapsulated housings and pixels not required for specific symbols are covered by light-absorbing caps. The opaque housing of each LED module results in an optimal absorption of phantom light incident in a planar manner.

Advantageously, this means that one symbol indicator can be used to realise different symbols, wherein the pixels not required in each case can be covered by reconnecting the light-absorbing caps as required and LED modules without LEDs can be plugged in at these points.

The collimator lenses can also be plugged or pressed onto the other side of the front plate. In this way, a simple assembly of the individual pixels of the symbol indicator without tools is provided.

These is preferably provision according to claim 2 for the length of the collimator lens to be shorter than its diameter. This not elongated, in contrast with known symbol indicators, but rather flat construction of the front lens means that the phantom light is primarily absorbed by housing parts in the region of the rear of the lens, i.e. preferably by housing parts which belong to the LED module, and not by the lateral surface of the lens. This thus enables a complete encapsulation of each individual collimator lens to be dispensed with.

In addition or alternatively, there is provision according to claim 3 for the collimator lenses to be greyed. In this way, it is possible for vastly different requirements for the visualisation of the symbol and for the phantom light

reduction to be realised. The greying improves the combating of phantoms, in particular when there is a fear of ambient light reflections occurring due to the location despite the angle of inclination between the LED module and front plate. The relationship between combating phantoms and the luminous intensity of the pixel can be optimised in a simple manner by stipulating the degree of greying. Instead of, or in addition to a greyed collimator lens, a diffusion disc or a grey filter disc may also be used.

According to claim 4, the entire front plate is equipped with collimator lenses. The phantom light detection is improved by way of this measure, since phantom light reflected on the lens surface affects the entire surface of the symbol indicator equally and not only the symbol-specific pixels.

The invention is described below based on a representation in the figure.

The figure shows the essential components for a light dot or pixel of a symbol indicator according to the invention on the basis of a vertical sectional view. It can be seen that an LED module 1 with an individual LED 2 is arranged at an angle of inclination α, which amounts to approx. 10°, relative to a front plate 3. A plurality of collimator lenses 4 assigned to the LED module 1 are used in the front plate 3, which collimator lenses 4 align the LED light obliquely striking the collimator lens 4 in parallel in an essentially horizontal direction of propagation. Here, the light dots or pixels not required for the respective symbol, for example digit or letter, are covered by light-absorbing caps.

The LED modules 1 not required at these points are replaced by blind modules, i.e. by LED housings 5 without LEDs 2. The LED

modules 1 required for the symbol pixels are connected via connecting wires 6 to a driver board (not shown) for activating the symbol indicator. Each LED module 1 is equipped with the light-absorbing housing 5, which has apertures in the region of an LED lens 7. Furthermore, the LED module 1 is provided with a snap connection 8 for fastening to the front plate 3. This enables a simple assembly of the LED module 1 without tools. The collimator lens 4 can also be similarly fastened to the front plate 3 so that it can be exchanged.

This construction is characterised by very effective ambient light suppression. Even ambient light incident in a highly planar manner, e.g. when the sun is low, is absorbed at the LED housing 5. In addition to the inclination between LED module 1 and front plate 3 at the angle α, this is also contributed to by the flat construction of the collimator lens 4. Ambient light can predominantly penetrate the collimator lens 4, without reaching the very short lateral surface of the collimator lens 4, whereby a complete light-absorbing encapsulation of the collimator lens 4 is unnecessary. In addition, the ambient light intensity can be reduced even further by greying the lens material.

The claimed concept of pixel generation enables a highly extensive protection against the ingress of ambient light, what is known as the phantom effect, by the combination of the angled arrangement between LED module 1 and front plate 3, with the encapsulated LED housing 5, flat lens construction, greying of the lens material, full equipping of the front plate 3 and plugging of plastic caps onto the pixel points not involved with the symbol to be indicated.

Patentkrav

1. Symbolviser, især til skinnebundne trafikveje, med LED-moduler (1) til pixel-baseret visualisering af symbolet og optikelementer, der er tilknyttet LED-modulerne (1), hvilke er anbragt på en frontplade (3), hvor
LED-modulerne (1) er anbragt skråt i forhold til frontpladen (3) med en vinkel (α), og optikelementerne er udformet som kollimatorlinser (4),
kendetegnet ved, at LED-modulerne (1) har opakt kapslede huse (5) og ved hjælp af snapforbindelse (8) kan sættes fast på frontpladen (3), hvor pixels, som symbolspecifikt ikke behøves, kan dækkes med lysabsorberende kapper.

2. Symbolviser ifølge et af de foregående krav,
kendetegnet ved, at længden af kollimatorlinserne (4) er mindre end deres diameter.

3. Symbolviser ifølge et af de foregående krav,
kendetegnet ved, at kollimatorlinserne (4) er grå.

4. Symbolviser ifølge et af de foregående krav,
kendetegnet ved, at frontpladen (3) er forsynet med kollimatorlinser (4) over hele sin flade.

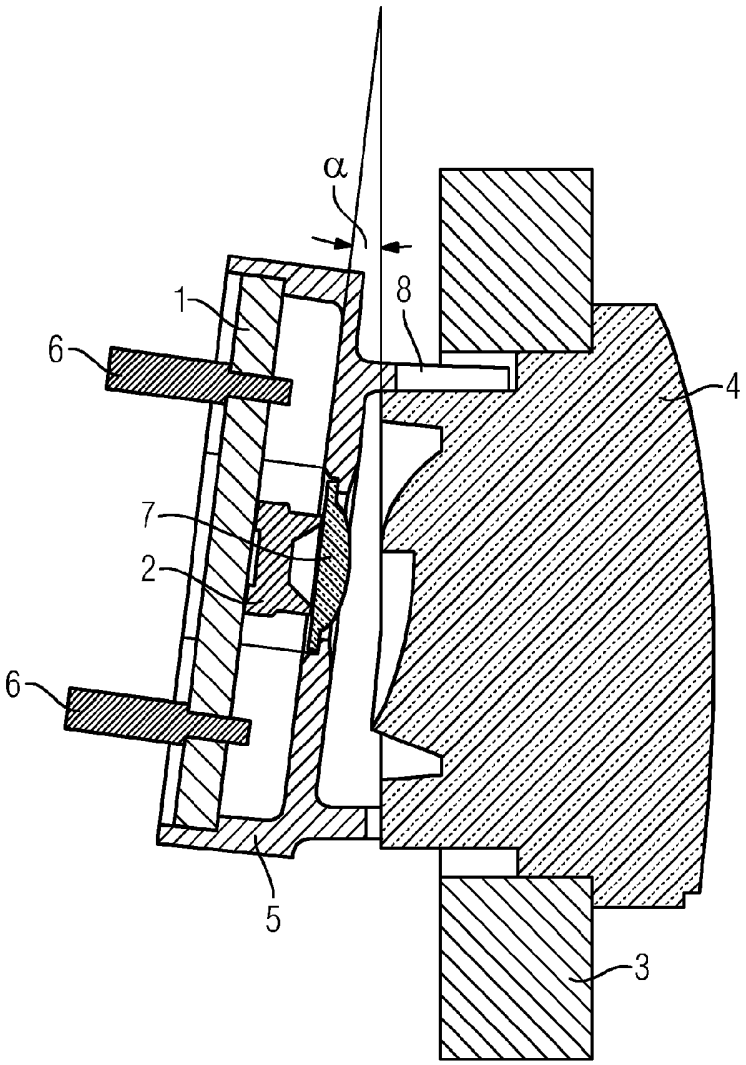

Fig. 1