Feb. 27, 1951 A. J. PARIS, JR 2,543,194

INTERNAL-COMBUSTION ENGINE AND METHOD OF OPERATING SAME

Filed Oct. 31, 1949 3 Sheets-Sheet 1

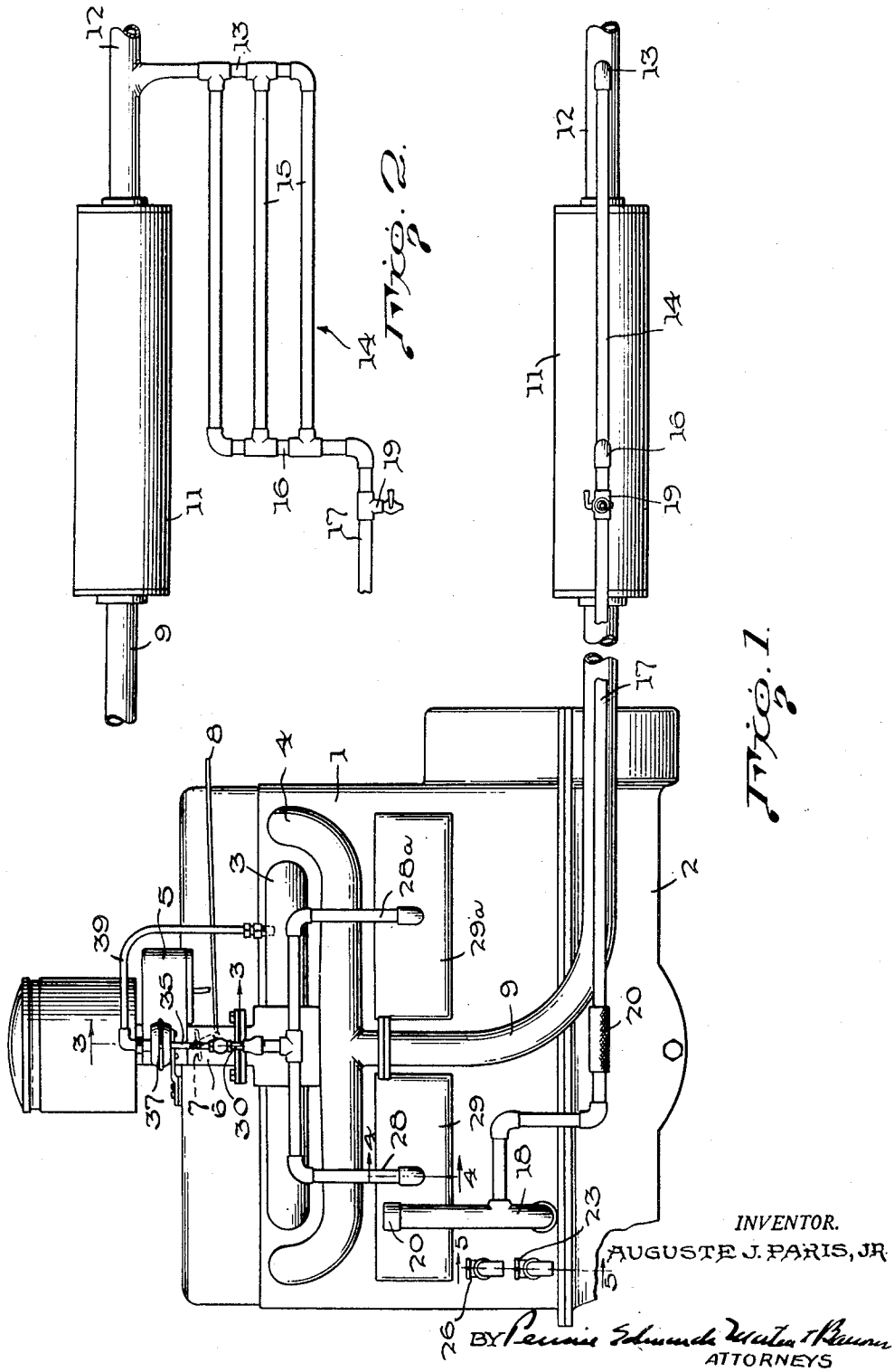

Fig. 2.

Fig. 1.

INVENTOR.
AUGUSTE J. PARIS, JR

BY Pennie Edmonds Morton Taylor & Barron
ATTORNEYS

Feb. 27, 1951 A. J. PARIS, JR 2,543,194

INTERNAL-COMBUSTION ENGINE AND METHOD OF OPERATING SAME

Filed Oct. 31, 1949 3 Sheets-Sheet 2

Fig. 3.

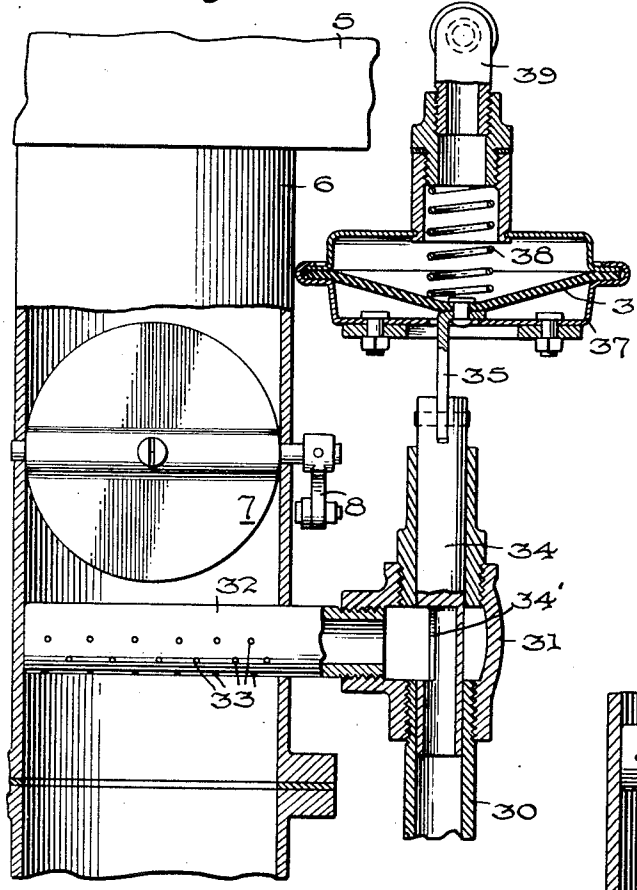

Fig. 4.

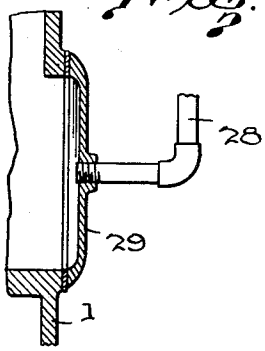

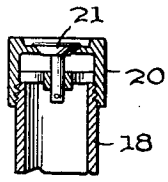

Fig. 6.

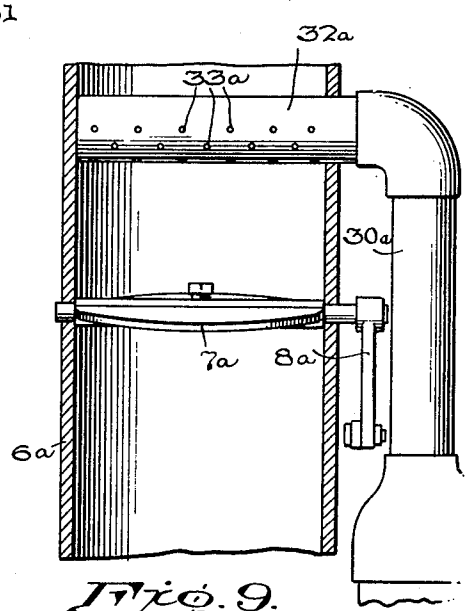

Fig. 9.

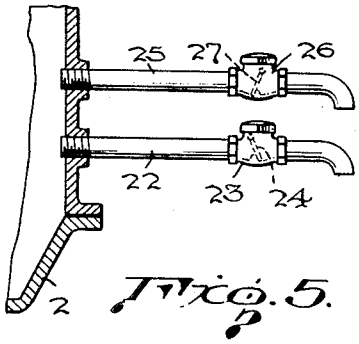

Fig. 5.

INVENTOR.

AUGUSTE J. PARIS, JR

BY

Pennie Edmonds Morton & Barrows

ATTORNEYS

Feb. 27, 1951 A. J. PARIS, JR 2,543,194

INTERNAL-COMBUSTION ENGINE AND METHOD OF OPERATING SAME

Filed Oct. 31, 1949 3 Sheets-Sheet 3

Fig. 7.

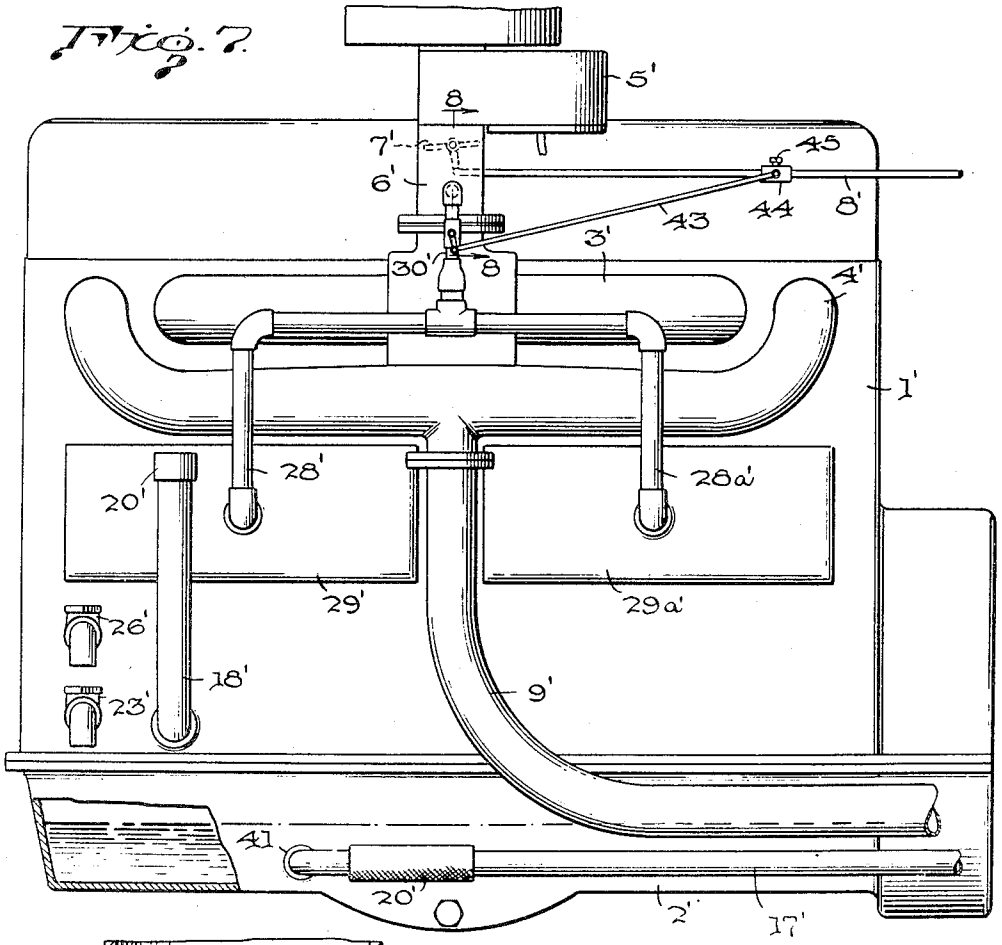

Fig. 8.

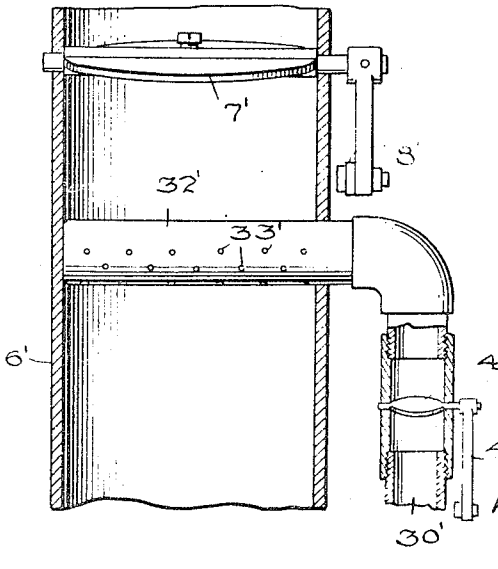

INVENTOR.
AUGUSTE J. PARIS, JR
BY
Dennis Edmonds Morton & Barron
ATTORNEYS

Patented Feb. 27, 1951

2,543,194

UNITED STATES PATENT OFFICE

2,543,194

INTERNAL-COMBUSTION ENGINE AND METHOD OF OPERATING SAME

Auguste Jean Paris, Jr., Bradford, Pa.

Application October 31, 1949, Serial No. 124,683

18 Claims. (Cl. 123—119)

1

This invention relates to an improved internal combustion engine and a method of operating the same whereby a smoother and more economical operation of the engine is obtained, and the quality of the lubricating oil in the crankcase continuously is maintained at a high value.

In my Patent No. 1,937,242, I have disclosed an internal combustion engine and method of operating the same in which a portion of the exhaust gases from the engine, after cooling and removal of water vapor and any entrained solid particles, are introduced into the lubricating oil in the crankcase of the engine and after passing through it are introduced into the combustion spaces of the several cylinders of the engine where they form a part of the fuel mixture of the engine.

The use of a portion of the exhaust gases in the manner referred to above has a two-fold effect. In the first place, it results in the lubricating oil maintaining its lubricating properties almost indefinitely, in that it does not become diluted and lose its viscosity. Consequently, the oil also continues to seal the rings of the pistons and maintains the desired high compression in the combustion space of the respective cylinders. Secondly, the carbon produced on the walls defining the combustion space is not hard as ordinarily is the case, but is of a graphitic nature, being soft and readily removed by merely wiping the coated parts. Such graphitic carbon has been found to have material advantages in the engine because of the lubricating properties which it exhibits.

The present invention is an improvement on the method and apparatus disclosed in the aforesaid patent in that the crankcase of the engine is maintained substantially at all times closed against the entry of atmospheric air and under a substantially uniform pressure equal to or not substantially exceeding atmospheric pressure, preferably very slightly exceeding atmospheric pressure.

In the preferred form of the invention, the introduction of the exhaust gases, after they have commingled with the oil in the crankcase of the engine, into the combustion chambers of the several cylinders is so controlled and so coordinated with the operation of the fuel feeding mechanism that they are introduced into the combustion chambers of the respective cylinders to form a part of the fuel mixture in them only when the engine is operating at a speed in excess of its normal idling speed. In many instances, at idling speed the gases from the crankcase of the

2

engine would so dilute the fuel mixture which is fed to the engine that the engine would not continue to run on the diluted fuel mixture unless the carburetor were set to supply such a richer mixture to the engine that normal operation of the engine would thereby be rendered uneconomical.

The present improvement in internal combustion engines and their operation will be further described in connection with the accompanying drawings, but it is to be understood that such further and detailed description is by way of exemplification and the invention is not limited thereby, except to the extent set forth in the subjoined claims.

In the drawings:

Fig. 1 is a side elevation of an internal combustion engine embodying one form of my invention;

Fig. 2 is a plan view of the right-hand side of Fig. 1;

Fig. 3 is an enlarged sectional view on line 3—3 of Fig. 1;

Fig. 4 is an enlarged sectional view on line 4—4 of Fig. 1;

Fig. 5 is an enlarged sectional view on line 5—5 of Fig. 1;

Fig. 6 is an enlarged sectional view through the upper end of the oil filler tube;

Fig. 7 is a side elevational view of an engine showing a modification of the invention;

Fig. 8 is an enlarged sectional view on line 8—8 of Fig. 7; and

Fig. 9 is a detailed sectional view illustrating a further modification of the invention.

Referring to the drawings, and first to Figs. 1 to 6, 1 indicates generally an internal combustion engine having the usual crankcase 2, intake manifold 3 from which the fuel mixture passes to the respective cylinders of the engine, and exhaust manifold 4. The usual carburetor 5 supplies a combustible fuel mixture to the intake manifold through a pipe 6, the amount of the fuel mixture supplied at any time being determined by the setting of a butterfly throttle valve 7, which, in turn, is controlled by the operator through appropriate linkage 8.

The exhaust gases leave the exhaust manifold 4 through a conduit 9 and after passing through a muffler 11 are discharged at the rear of the vehicle in which the engine is mounted through a pipe 12.

At an appropriate point in the exhaust line, preferably slightly beyond the muffler 11, a portion of the exhaust gases are withdrawn for return

to the engine and passed into a rear header 13 forming one end of a cooler 14 for the withdrawn portion of the exhaust gases. From the header 13 the withdrawn exhaust gases pass through a plurality of spaced pipes 15 to a front header 16 from which they pass through a pipe 17 to the oil filler tube 18. The cooler 14 and pipe 17 preferably are formed of one-inch copper tubing with the necessary copper connections. The use of copper tubing of that size permits the exhaust gases to pass through it without appreciable friction. Also by having the tubing of copper the cooling of the hot withdrawn exhaust gases by the atmospheric air passing over the outside of the tubing is more effective due to the high heat conductivity of copper; and corrosion of the pipes by constituents of the exhaust gases is reduced to a minimum.

A water trap and drain 19 is inserted in the pipe 17 to trap and drain water resulting from the condensation in the cooler 14 of water vapors in the withdrawn exhaust gases. If desired, means also may be inserted in the pipe 17 to separate any solid particles entrained in the portion of the exhaust gases which are returned to the engine, but ordinarily that will not be necessary.

A short section of rubber hose 20 is inserted in the line 17 close to the oil filler tube 18 to facilitate making the connection to the filler tube and to act as a vibration absorber, so that any vibrations set up in the cooler 14 or in the section of the pipe 17 between the cooler and the oil filler tube will not be transmitted to the latter.

The oil filler tube 18 may be the conventional filler tube of the engine. It may extend to near the bottom of the crankcase so that exhaust gases being returned to the engine through the pipe 17 will be introduced into the oil in the crankcase near the bottom thereof so that maximum commingling of the returned exhaust gases with the oil will be obtained. If the filler tube extends to near the bottom of the crankcase its lower end may have branch pipes extending to different parts of the lower portion of the crankcase to provide for better commingling of the returned exhaust gases with the oil in the crankcase. However, the ebullition caused by the passage of the returned exhaust gases upwardly through the oil in the crankcase, together with the usual movement of the oil therein usually will make it unnecessary to use such branch pipes to obtain adequate commingling of the returned exhaust gases with all portions of the oil of the lubricating system.

Instead of the top end of the oil filler tube being closed by the usual slip cover which permits the passage of vapors from the crankcase to the atmosphere and air from the atmosphere to the crankcase, it is closed by a cap 20 which makes an air-tight fit with it, but which carries a pressure relief valve 21 which is effective to prevent the passage of atmospheric air and any entrained dirt into the crankcase, but which will open under a predetermined interior pressure. In order further to control the pressure under which the gases are maintained in the space above the oil in the crankcase, a vent pipe 22 extends from such space and has therein a pressure relief valve 23, which may be of any conventional type, such as a freely swinging flap valve 24 which normally hangs in a position to prevent inward passage of atmospheric air, but which readily opens under an internal pressure only slightly in excess of atmospheric pressure to relieve any such pressure within the crankcase. The valve 24 is particularly necessary in those cases where the oil filler extends below the level of the oil in the crankcase, and in all cases will give a somewhat better control of the pressure within the crankcase than could be obtained by the valve 21.

An air intake pipe 25 also communicates with the space in the crankcase above the oil and is provided with an intake valve 26 having a freely swinging flap member 27 which normally hangs in a position to prevent passage of gases or vapors from the crankcase to the atmosphere, but which readily is opened to admit atmospheric air to the crankcase should the pressure therein drop even slightly below that of the atmosphere.

Except for the valve 26 the crankcase otherwise is sealed against the entry of atmospheric air and any dirt or impurities carried thereby. Thus, all atmospheric air normally is excluded from the crankcase and the returned exhaust gases in the space above the oil therein are maintained under a substantially uniform pressure not substantially exceeding atmospheric pressure.

The returned exhaust gases after commingling with the oil in the crankcase and entraining a certain amount of diluents of the oil collect in the space above the oil in the crankcase and are withdrawn from the upper portion thereof at any point where the gases and oil vapors are relatively free of any oil droplets and which will ensure good circulation of the returned gases through the crankcase before their withdrawal, for example, they may be withdrawn through pipes 28 and 28a which extend through the usual valve chest covers 29 and 29a. The pipes 28 and 28a extend upwardly and each connects with the lower end of a pipe 30, the upper end of which connects with a valve 31 for controlling the passage of the gases and vapors withdrawn from the crankcase through a pipe 32 which extends into and across the pipe 6 leading from the carburetor to the intake manifold. The gases and vapors from the pipe 32 preferably enter the pipe 6 through a series of perforations 33 located at the downstream side of the pipe 32, thereby being intimately admixed with the fuel mixture passing to the intake manifold.

Passage of the gases and vapors through the valve 31 to the pipe 32 is controlled by a valve member 34, the stem of which is pivotally connected to one end of a link 35. The other end of the link 35 is connected to the outer face of a diaphragm 36 sealed across a housing 37. A spring 38 within the housing bears against the inner face of the diaphragm and normally urges the diaphragm to its outermost position, which causes the valve 34 to establish communication through its port 34' for passage of gases and vapors from the pipe 30 to the pipe 6. The space in the housing 37 at the inner side of the diaphragm is connected to the intake manifold 3 through a pipe 39. Thus, the diaphragm 36 and the valve 34 are at all times acted upon by the suction in the intake manifold.

The force of the spring 38 is such that the suction created in the intake manifold at running speeds is insufficient to lift the valve sufficiently to close it, so that at such speeds of the engine the valve remains open and gases and vapors from the crankcase are introduced into the pipe 6 for mixing with the combustible mixture passing from the carburetor to the intake manifold in progressively greater amounts as the throttle valve is opened and the suction in the intake manifold decreases. However, as the throttle valve is moved to its closed position and the suc-

tion in the manifold progressively becomes greater, the valve 34 will be lifted, until, at the idling speed of the engine it will completely close the passage leading from the pipe 32 so that at the idling speed of the engine dilution of the fuel mixture by gases and vapors from the crankcase does not take place. In many instances that is desirable because with such dilution of the fuel mixture the engine would not continue to run at the normal idling speed unless the carburetor were set to supply such a richer mixture to the engine that normal operation of the engine would be uneconomical. However, as the speed of the engine is increased above idling speed, with a corresponding decrease of suction in the intake manifold, the valve 34 again will drop, until at the maximum running speed it will reach its full open position, shown in Fig. 3, to permit the maximum amount of gases and vapors from the crankcase to pass through the port 34' to pipe 6 for mixing with the fuel supply to the engine; and at all speeds of the engine above idling speed, the opening of the valve 34 and, therefore, the amount of such gases and vapors admixed with the fuel mixture will be directly proportional to suction in the intake manifold and the amount of fuel mixture supplied to the engine.

Instead of the suction-actuated valve just described, any other type of valve which is effective to maintain the valve 31 closed at idling speeds of the engine but to open it at higher speeds proportionally to the suction in the intake manifold may be used.

The pipes 28 and 28a preferably are of one-inch copper tubing, but the pipe 30 preferably is of substantially less diameter, for example, three-eighths of an inch.

The use of such relatively large diameters for the pipes 28 and 28a is desirable in that it enables any droplets of oil which may be entrained in the gases withdrawn from the crankcase to drop out of the gases and flow back to the crankcase, so that the use of an oil separator to separate such oil droplets from the returned exhaust gases before they are admitted to the engine cylinders is not necessary.

In operation of an internal combustion engine of Figs. 1 to 6, a portion of the exhaust gases will be withdrawn from the exhaust line and passed through the cooler 14 where they will be cooled to a temperature below that at which the oil in the crankcase of the engine would crack under the temperature and pressure therein, and below that at which the gases otherwise might have a deleterious effect on the oil. Any water resulting from the condensation of water vapor in the exhaust gases is withdrawn through the water drain 19. The cooled and de-watered exhaust gases then pass through the pipe 17 to the oil filler tube 18 and through it to the lower portion of the body of oil in the crankcase.

The returned exhaust gases introduced into the lubricating oil in the crankcase are still warm and as they bubble up through the oil they agitate it and vaporize or entrain any light constituents therein which otherwise would remain in the oil and reduce its viscosity and otherwise impair its lubricating properties. Hence, the lubricating oil constantly is subjected to treatment which causes its lubricating properties to be maintained at a high value, with the result that periodic changing of the oil is not necessary and it is only necessary to add oil from time to time to compensate for that normally used in performing its lubricating functions.

At any time the engine is operating at a speed greater than its idling speed the suction created in the intake manifold will cause the valve 31 to be opened and permit a flow of the exhaust gases and any entrained vapors from the upper portion of the crankcase through the pipes 28, 28a and 30 to the pipe 6 through which the combustible fuel mixture is passing to the engine, where they will commingle with the combustible fuel mixture and form a part thereof. The amount of the exhaust gases which are permitted to pass to the pipe 6 for commingling with the combustible fuel mixture is automatically controlled by the suction created in the intake manifold so that the amount of returned exhaust gases and entrained vapors admixed with the combustible fuel mixture is in direct proportion to the amount of fuel mixture supplied to the engine.

By maintaining the valve 31 closed when the engine is operating at idling speed, a volumetric reduction of the combustible fuel mixture supplied to the engine, such as would prevent continuous operation of the engine at idling speed with the normal setting of the carburetor is prevented. Thus, it is not necessary to set the carburetor to supply a richer mixture which would result in uneconomical operation of the engine at speeds above its idling speed.

The use of the returned exhaust gases as a constituent of the combustible fuel mixture, in the manner described, has the further advantage in that the carbon which forms in the combustion space of the respective cylinder is not hard as normally is the case, nor does it adhere tenaciously to the walls defining the combustion spaces of the cylinders. On the contrary, it is soft, easily wiped off, and is of a graphitic nature. Its presence actually has been found to be beneficial in the operation of the engine.

It is not always necessary that the oil filler tube extend below the level of the oil in the crankcase so that the returned gases are introduced directly into the oil in the crankcase, and when desired the returned gases may be introduced into the crankcase above the oil level therein, either through the filler tube 18 or by causing pipe 17 to directly enter the crankcase above the oil level.

When the returned products of combustion enter the crankcase above the oil level therein, they will absorb or entrain gaseous or vaporous diluents in the crankcase and carry them out to be admixed with the fuel mixture passing to the engine. The capacity for absorption of diluent vapors by the returned gases will be increased by the increase in the temperature of the returned gases on entering the crankcase. As the oil in the crankcase will not vaporize at the temperature prevailing therein the constant sweeping of the space in the crankcase by the returned products of combustion will have no effect on diminution of the oil by vaporization thereof.

When the returned gases are introduced into the crankcase above the oil level therein, the force of the rotating crankshaft and the motion of the connecting rods cause such agitation of the oil that the returned gases constantly will be taken up by the oil and caused to enter the body thereof so that the purification of the oil, as explained above, constantly will take place.

The form of the invention shown in Figs. 7 and 8 is the same as that illustrated in Fig. 1, except that products of combustion which are returned through the pipe 17' are introduced directly into the body of oil in the crankcase through a con-

nection 41 in the crankcase below the oil level therein, and also except that the means for controlling the introduction of gases and vapors from the crankcase into the intake manifold is through mechanical linkage instead of through a vacuum or suction-operated valve.

In this form of the invention, gases and vapors withdrawn from the upper portion of the crankcase and passed through the pipe 30' to the pipe 32' positioned transversely across the pipe 6' are controlled by a butterfly valve 42. The operating stem of the butterfly valve 42 is connected through suitable linkage 43 to a sleeve 44 which is adjustably mounted on the manually-controlled linkage 8' for the butterfly valve 7' of the carburetor. The sleeve 44 may be held in adjusted position along the link 8' by a set screw 45. In all other respects the engine disclosed in this form of the invention is the same as that illustrated in Fig. 1 and like parts are designated by the same reference characters primed.

Normally the sleeve 44 is fixed along the link 8' at a position such that when the throttle valve 7' of the carburetor is at a setting corresponding to the idling speed of the engine, the butterfly valve 42 is in its fully closed position and prevents the passage of any of the returned exhaust gases from the crankcase to the intake manifold 3' of the engine. However, the connection of the linkage 43 with the link 8' is such that as soon as the throttle valve 7' of the carburetor is opened from its idling position the butterfly valve 42 will be opened to permit gases and vapors from the crankcase to be drawn into the intake manifold. Also, the connection of the linkage 43 with the manually-controlled link 8' is such that as the throttle valve 7' is opened further from its idling position the butterfly valve 42 will be opened further, thereby maintaining a direct ratio between the amount of combustible fuel mixture supplied from the carburetor and the amount of returned exhaust gases and entrained vapors which are mixed therewith.

If desired, the passage of gases and vapors from the crankcase may be controlled by a combination of the vacuum-operated valve, such as is utilized in the engine of Figs. 1 to 6, and mechanical linkage of the type utilized in the engine of Figs. 7 and 8.

In both forms of the invention already described, the gases and vapors from the crankcase are introduced into the passageway leading from the carburetor to the intake manifold at a point between the butterfly throttle valve for the carburetor and the intake manifold. When the gases and vapors from the crankcase are thus admixed with the combustible fuel mixture on the downstream side of the throttle valve for the carburetor a control valve such as the vacuum-operated control valve of Figs. 1 and 3 and the mechanically-operated control valve of Figs. 7 and 8 are desirable, although even when the gases and vapors from the crankcase are so mixed with the combustible fuel mixture from the carburetor such valves for controlling the amount of them admixed with the combustible fuel mixture are not in all cases necessary.

If the bases and vapors from the crankcase are introduced into the passageway from the carburetor to the intake manifold at the upstream side of the carburetor throttle valve, that is, between the carburetor and the throttle valve therefor, the use of means for controlling the amount of gases and vapors from the crankcase which are admixed with the combustible fuel mixture are even less necessary. Such an arrangement is shown in Fig. 9 of the drawings in which 6ª indicates the pipe leading from the carburetor to the intake manifold, 7ª indicates the butterfly throttle valve for the carburetor and 8ª the linkage for manually controlling the position of the throttle valve within the pipe 6ª. It will be noted that in this form of the invention the pipe 30ª extends to a position above the throttle valve 7ª and the pipe 32ª which leads therefrom and extends transversely across the pipe 6ª is located at the upstream side of the carburetor control valve 7ª. When the throttle valve 7ª is open, the suction created in the intake manifold will draw gases and vapors from the crankcase through the perforations 33ª and cause them to be admixed with the combustible fuel mixture passing to the engine cylinders. The relative amounts of gases and vapors passing through the perforations 33ª for admixing with the combustible fuel mixture will be in accordance with the setting of the throttle valve so that as the throttle valve is opened to a greater extent to admit larger amounts of fuel mixture to be passed to the engine the gases and vapors in the pipe 32ª will be subjected to a greater suction from the intake manifold, so that even without a valve for controlling the gases and vapors passing from the crankcase for admixing with the combustible fuel mixture the amount of such gases and vapors admixed therewith will be proportional to the amount of the fuel mixture being supplied to the engine.

In all other respects the form of the invention illustrated in Fig. 9 is the same as the form of the invention illustrated in Figs. 1 to 6, or in Figs. 7 and 8.

From the aforegoing it will be seen that the present invention not only provides for conditioning the lubricating oil of an internal combustion engine with a portion of the products of combustion of the engine, together with the constant removal of diluents from the oil, and the subsequent use of such returned products of combustion and entrained diluents as a constituent of the combustible mixture normally supplied to the cylinders of the engine, but also prevents the dilution of the returned products of combustion and the combustible mixture supplied to the engine with atmospheric air by normally preventing entrance of atmospheric air into the space in the crankcase above the oil therein from which the returned products of combustion are withdrawn for admixing with the combustible mixture.

Various changes may be made in the details of the invention without departing from the scope thereof or without sacrificing any of the advantages obtained in the operation of internal combustion engines in accordance therewith.

I claim:

1. The method of operating an internal combustion engine which comprises maintaining the crankcase thereof normally sealed against entry of atmospheric air and maintaining a substantially uniform predetermined pressure therein slightly above but not substantially exceeding atmospheric pressure, cooling a portion of the exhaust gases from the engine, commingling the cooled portion of the exhaust gases with the body of lubricating oil in the crankcase, whereby a mixture of said portion of the exhaust gases and vapors of diluents from the oil entrained thereby form in the space above the body of oil in the crankcase where they are maintained at said pre-

determined pressure, withdrawing a portion of such exhaust gases and entrained vapors from the crankcase, and admixing the withdrawn portion of the exhaust gases and any entrained vapors with the combustible fuel mixture supplied to the engine.

2. The method of operating an internal combustion engine as set forth in claim 1 in which the cooled exhaust gases are introduced into the body of oil in the crankcase below the level thereof, and the exhaust gases and any entrained vapors are withdrawn from the upper portion of the space in the crankcase above the body of oil therein where oil droplets in the exhaust gases are substantially at a minimum.

3. The method of operating an internal combustion engine as set forth in claim 1 in which the exhaust gases and any entrained vapors withdrawn from the crankcase are admixed with the combustible fuel mixture supplied to the engine only when the engine is operated at a speed greater than its idling speed.

4. The method of operating an internal combustion engine as set forth in claim 3 in which the amount of withdrawn exhaust gases and any entrained vapors admixed with the combustible fuel mixture is coordinated with the amount of the combustible fuel mixture supplied to the engine.

5. The method of operating an internal combustion engine as set forth in claim 1 in which the cooled portion of the exhaust gases is introduced into the crankcase above the body of oil therein and is commingled with the oil of said body by agitation of the oil in the crankcase.

6. The method of operating an internal combustion engine as set forth in claim 1 in which the mixture of exhaust gases and entrained gases is admixed with the combustible fuel mixture of the engine between the carburetor for the engine and the throttle valve for controlling the flow of combustible fuel mixture from the carburetor to the intake manifold of the engine.

7. The method of operating an internal combustion engine which comprises commingling a portion of the exhaust gases with the lubricating oil in the crankcase of the engine, whereby said portion of the exhaust gases will entrain and remove diluents from the oil, withdrawing exhaust gases and entrained diluents from the space in the crankcase above the oil therein and admixing them with the fuel mixture supplied to the engine, said admixing of the exhaust gases and entrained diluents with the fuel mixture supplied to the engine taking place only when the engine is operating at a speed greater than its idling speed.

8. The method of operating an internal combustion engine as set forth in claim 7 in which the amount of exhaust gases and entrained diluents admixed with the combustible mixture supplied to the engine when the engine is operating at a speed greater than its idling speed is coordinated with the amount of combustible fuel mixture supplied to the engine.

9. An internal combustion engine comprising means for normally maintaining the crankcase thereof sealed against the entry of atmospheric air and for maintaining a substantially uniform pressure therein slightly above but not substantially exceeding atmospheric pressure, means for withdrawing a portion of the exhaust gases from the exhaust line of the engine and commingling them with the lubricating oil in the crankcase of the engine for entraining and removing diluents therefrom, means for maintaining a body of said exhaust gases and entrained diluents in the space in the crankcase above the body of oil therein, and means for withdrawing a portion of the exhaust gases from the space in the crankcase above the oil therein and admixing them with combustible fuel mixture to be supplied to the engine.

10. An internal combustion engine as set forth in claim 9 which includes means for withdrawing water resulting from the cooling of the withdrawn exhaust gases before they are introduced into the lubricating oil in the crankcase, and in which the withdrawn exhaust gases are introduced into the body of lubricating oil in the crankcase below the level thereof and the exhaust gases are withdrawn from the upper portion of the space in the crankcase above the oil where oil droplets are substantially at a minimum.

11. An internal combustion engine comprising a carburetor for supplying a combustible fuel mixture, a conduit extending from the carburetor for the passage of combustible fuel mixture therefrom to the engine, a throttle valve for controlling the supply of combustible fuel mixture through said conduit, means for operating said throttle valve, said throttle valve having a position at which combustible fuel mixture is supplied to the engine in such amount as to operate the engine at an idling speed, means for withdrawing a portion of the exhaust gases from the exhaust line of the engine and introducing them into the crankcase of the engine for commingling with lubricating oil therein and entrainment of diluents from such oil, a conduit extending from the space in the crankcase above the oil therein to the conduit through which combustible fuel mixture passes from the carburetor to the engine, a valve in the conduit extending from said space, and means for controlling the operation of said last-named valve and consequently the flow of exhaust gases and entrained vapors from the crankcase through the conduit from said space for admixing with the combustible fuel mixture passing through the conduit from the carburetor to the engine, means for maintaining said last-named valve means closed when the throttle valve for the carburetor is at a position corresponding to the idling speed of the engine and for progressively opening the same as the throttle valve for the carburetor is progressively opened to greater extents.

12. An internal combustion engine as set forth in claim 11 which includes means for normally maintaining the space above the oil in the crankcase closed against entry of atmospheric air.

13. An internal combustion engine as set forth in claim 12 which includes means for maintaining, in the space above the oil in the crankcase, a substantially uniform predetermined pressure slightly above but not substantially greater than atmospheric pressure.

14. An internal combustion engine comprising a carburetor for supplying a combustible fuel mixture, a conduit extending from the carburetor for the passage of combustible fuel mixture therefrom to the engine, a throttle valve for controlling the supply of combustible fuel mixture through said conduit, means for operating said throttle valve, said throttle valve having a position at which combustible fuel mixture is supplied to the engine in such amount as to operate the engine at an idling speed, means for

withdrawing a portion of the exhaust gases from the exhaust line of the engine and introducing them into the crankcase of the engine for commingling with lublicating oil therein and entrainment of diluents from such oil, a conduit extending from the space in the crankcase above the oil therein to the conduit through which combustible fuel mixture passes from the carburetor to the engine, a valve in the conduit extending from said space, and means for controlling the operation of said last-named valve and consequently the flow of exhaust gases and entrained vapors from the crankcase through the conduit from said space for admixing with the combustible fuel mixture passing through the conduit from the carburetor to the engine, said last-named valve means being of the vacuum-operated type and so connected with the intake manifold that above a predetermined pressure in the intake manifold the valve means is maintained closed but below said predetermined pressure the extent to which the valve means is opened to permit flow of exhaust gases and entrained vapors from the crankcase for admixing with the combustible fuel mixture supplied to the engine is detemined by the suction on the intake manifold and the reduction of pressure therein.

15. An internal combustion engine as set forth in claim 14 which includes valve means for normally maintaining the space above the oil in the crankcase closed against entry of atmospheric air and for maintaining the space above the oil in the crankcase at a substantially uniform predetermined pressure slightly above but not substantially greater than atmospheric pressure.

16. An internal combustion engine comprising a carburetor for supplying a combustible fuel mixture, a conduit extending from the carburetor for the passage of combustible fuel mixture therefrom to the engine, a throttle valve for controlling the supply of combustible fuel mixture through said conduit, means for operating said throttle valve, said throttle valve having a position at which combustible fuel mixture is supplied to the engine in such amount as to operate the engine at an idling speed, means for withdrawing a portion of the exhaust gases from the exhaust line of the engine and introducing them into the crankcase of the engine for commingling with lubricating oil therein and entrainment of diluents from such oil, a conduit extending from the space in the crankcase above the oil therein to the conduit through which combustible fuel mixture passes from the carburetor to the engine, a valve in the conduit extending from said space, and means for controlling the operation of said last-named valve and consequently the flow of exhaust gases and entrained vapors from the crankcase through the conduit from said space for admixing with the combustible fuel mixture passing through the conduit from the carburetor to the engine, said last-named means being so connected to the means for operating said throttle valve that the valve in the conduit extending from said space is maintained closed when said throttle valve is at its position corresponding to the idling speed of the engine, but is opened when said throttle valve is moved from its said position to permit a greater amount of combustible fuel mixture to be supplied to the engine, whereby exhaust gases and entrained vapors then will pass through the conduit extending from the space above the oil in the crankcase and be admixed with the combustible fuel mixture supplied to the engine.

17. An internal combustion engine as set forth in claim 16 in which the connection of the two valves is such that at speeds above the idling speed of the engine the amount of exhaust gases and entrained vapors permitted to pass through the conduit extending from the space above the oil in the crankcase is related to the amount of combustible fuel mixture supplied to the engine.

18. An internal combustion engine comprising a carburetor for supplying a combustible fuel mixture, a conduit extending from the carburetor for the passage of combustible fuel mixture therefrom to the engine, a throttle valve for controlling the supply of combustible fuel mixture through said conduit, means for operating said throttle valve, said throttle valve having a position at which combustible fuel mixture is supplied to the engine in such amount as to operate the engine at an idling speed, means for withdrawing a portion of the exhaust gases from the exhaust line of the engine and introducing them into the crankcase of the engine for commingling with lubricating oil therein and entrainment of diluents from such oil, and a conduit extending from the space in the crankcase above the oil therein to a position in the conduit through which combustible fuel mixture passes from the carburetor to the engine between the carburetor and said throttle valve.

AUGUSTE JEAN PARIS, JR.

REFERENCES CITED

The following references are of record in the file of this patent:

UNITED STATES PATENTS

Number	Name	Date
1,673,181	Burtnett	June 12, 1928
1,937,242	Paris, Jr.	Nov. 28, 1933
2,154,417	Anderson	Apr. 18, 1939
2,408,846	Golden et al.	Oct. 8, 1946

Certificate of Correction

Patent No. 2,543,194 February 27, 1951

AUGUSTE JEAN PARIS, JR.

It is hereby certified that error appears in the printed specification of the above numbered patent requiring correction as follows:

Column 7, line 68, for the word "bases" read *gases*; column 10, line 60, after "includes" insert *valve*; column 11, line 26, for "detemined" read *determined*;

and that the said Letters Patent should be read as corrected above, so that the same may conform to the record of the case in the Patent Office.

Signed and sealed this 15th day of May, A. D. 1951.

[SEAL]

THOMAS F. MURPHY,
Assistant Commissioner of Patents.