AUSTRALIA

AMENDED

Patents Act 1990

AUSTRALIAN PATENT OFFICE SEC 104

PATENT REQUEST : STANDARD PATENT

We, being the person(s) identified below as the Applicant, request the grant of a patent to the person identified below as the Nominated Person, for an invention described in the accompanying standard complete specification.

Full application details follow:

686627

[71/70] Applicant/Nominated Person:

Novartis AG

Address:

Schwarzwaldallee 215, 4058 Basel, Switzerland

[54] Invention Title:

Contact Lens Inspection Apparatus and Lens Mold for Use in Such Apparatus

[72] Name(s) of actual inventor(s):

[74] Address for service in Australia:
DAVIES COLLISON CAVE, Patent Attorneys, of Level 10, 10 Barrack Street, Sydney, 2000, Australia. Attorney Code: CA

BASIC CONVENTION APPLICATION(S) DETAILS:

[31] Application No.	[33] Country	Code	[32] Date
08/089523	United States of America	US	21 July 1993

Basic Applicant/s: Kai C Su; Jack C White; Mushir Siddiqui

Drawing number recommended to accompany the abstract: 1

Peter Steane

A member of the firm of DAVIES COLLISON CAVE
for and on behalf of the applicant

9 October, 1997

AUSTRALIAN PATENT OFFICE ML

AUSTRALIA

Patents Act 1990

NOTICE OF ENTITLEMENT

CIBA-GEIGY AG being the Nominated Person in respect of Application No. 67535/94 state the following :

1. CIBA GEIGY AG is the Nominated Person in respect of the application.

2. The actual inventors of the invention, the subject of the application are KAI C. SU, JACK C. WHITE and MUSHIR SIDDIQUI.

3. The Nominated Person is entitled to the grant of a patent in respect of the application because the said Nominated Person derived title to the invention from the actual inventors by way of Assignment.

4. The Nominated Person is entitled to claim priority from the basic application listed on the patent request form because (i) the Nominated Person is the assignee in respect of the basic application; and (ii) the basic application was the first application made in a Convention country in respect of the invention the subject of the application.

Dated this 12th day of June, 1997.

a member of the firm of
DAVIES COLLISON CAVE
for and on behalf of
the applicant(s).

AU9467535

(12) PATENT ABRIDGMENT (11) Document No. AU-B-67535/94
(19) AUSTRALIAN PATENT OFFICE (10) Acceptance No. 686627

(54) Title
CONTACT LENS INSPECTION APPARATUS AND LENS MOLD FOR USE IN SUCH APPARATUS

International Patent Classification(s)
(51)[6] B29D 011/00 B29C 033/42 B29C 033/44

(21) Application No. : 67535/94 (22) Application Date : 15.07.94

(30) Priority Data

(31) Number	(32) Date	(33) Country
089523	21.07.93	US UNITED STATES OF AMERICA

(43) Publication Date : 02.02.95

(44) Publication Date of Accepted Application : 12.02.98

(71) Applicant(s)
NOVARTIS AG

(72) Inventor(s)
KAI C. SU; JACK C. WHITE; MUSHIR SIDDIQUI

(74) Attorney or Agent
DAVIES COLLISON CAVE , GPO Box 3876, SYDNEY NSW 2001

(56) Prior Art Documents
AU 25659/92
AU 28461/92
US 4440699

(57) Claim

1. A contact lens inspection system comprising:

a contact lens support;

a light source for illuminating a contact lens located on said contact lens support;

a light receiving unit;

wherein said contact lens support is a mold member used to mold the contact lens located thereon; and

wherein said mold member is formed of a relatively transparent plastic material and comprises a convex portion having a convex surface and an outer surface opposite said convex surface, said outer surface having an optical finish to permit optical inspection of a lens located on said convex surface by transmitting light from said light source through said outer surface, said mold member, said convex surface and the lens to the light receiving unit.

2. A contact lens inspection system comprising:

a contact lens support;

a light source for illuminating a contact lens located on said contact lens support;

a light receiving unit;

wherein said contact lens support is a mold member used to mold the contact lens

. . ./2

located thereon; and

wherein said mold member is formed of a relatively opaque plastic material and comprises a convex portion having a convex surface, and wherein said convex surface is provided with an optical finish to permit optical inspection of a lens located on said convex surface by reflecting light off of said convex surface and through the lens to the light receiving unit.

5. A contact lens inspection system according to claims 1-4, with a lens mold comprising:

a first mold member comprising a concave portion, said concave portion having a concave surface centered at a longitudinal axis of said first mold member, an outer rim located along a periphery of said concave surface, and ring engaging means disposed adjacent said outer rim for engaging, upon polymerization of a lens material within a lens cavity, excess lens material formed along an outer periphery of the lens cavity; and

said second mold member comprising said convex portion having said convex surface, wherein the lens cavity is defined between said concave and convex surfaces when said outer rim of said concave portion of said first mold member is made to contact said convex portion of said second mold member;

whereby, upon polymerization of the lens material and upon a separation of said first and second mold members, the excess lens material is engaged with said first mold member.

Our Ref: 513435

P/00/011
Regulation 3:2

AUSTRALIA

Patents Act 1990

ORIGINAL
COMPLETE SPECIFICATION
STANDARD PATENT

AUSTRALIAN PATENT OFFICE SEC 104

Applicant(s): Novartis AG
~~Ciba-Geigy AG~~
~~Klybeckstrasse 141~~ Schwarzwaldallee 215
~~CH-4002 BASLE~~ 4058 Basel Switzerland
~~SWITZERLAND~~

Address for Service: DAVIES COLLISON CAVE
Patent & Trade Mark Attorneys
Level 10, 10 Barrack Street
SYDNEY NSW 2000

Invention Title: Contact Lens Inspection Apparatus and Lens Mold for Use in Such Apparatus

The following statement is a full description of this invention, including the best method of performing it known to me:-

AUSTRALIAN PATENT OFFICE

CL/V-19676/A/CGV 1713

Contact Lens Inspection Apparatus and Lens Mold for Use in Such Apparatus

The present invention relates generally to the manufacture of contact lenses, and more particularly, to a lens mold for use primarily in the manufacture of soft contact lenses.

Conventionally, a soft contact lens may be cast using a two-sided mold in which one side of the mold includes a convex surface and the other side of the mold includes an opposing concave surface, and in which a cavity for forming the lens is defined by the opposing convex and concave surfaces. A lens is formed by placing a lens material on one of the convex and concave surfaces, bringing the two sides of the mold together to form the lens cavity and separating the two sides of the mold to expose the cast lens after polymerization of the lens material.

Furthermore, techniques are generally known for controlling the adhesion of the cast lens upon separation of the two sides of the mold, i.e. for causing the cast lens to exhibit an affinity to adhere to one of the convex and concave surfaces upon separation of the two sides of the mold. The utilization of such techniques helps eliminate the time consuming, manual labor that is otherwise required in determining which surface the transparent cast lens has adhered to after separation of the two sides of the mold. For example, European Patent Application No. 0367513 discloses a technique for ensuring that the cast lens remains in contact with one side of the mold by flame polishing the convex surface of the one side of the mold.

Furthermore, United States Patent No. 4,197,266 discloses that by fabricating the two sides of the mold with materials which, while both wettable, have different degrees of wettability, one can insure that the cast lens will adhere to the desired surface of the mold upon separation. Additionally, United States Patent No. 4,150,073 discloses that the adhesion of the cast lens may be controlled by exposing a mold surface to monomeric vapors.

However, in manufacturing the contact lens, lens material of a sufficient quantity to exceed the volume of the cavity is placed on one of the mold surfaces, and then the two

AUSTRALIAN PATENT OFFICE

sides to the mold are brought together to form the lens cavity. The quantity of excess lens material is collected within the mold body, along the outer periphery of the lens cavity, to form a ring of excess polymerized lens material. Conventionally, upon separation of the lens mold, the ring of excess lens material is located by visual inspection and then removed manually. (See, for example, United States Patent No. 4,208,364, Column 8, lines 46-51).

Furthermore, after the lens has been cast and the mold separated, testing of certain physical characteristics of the cast lens must be carried out. Conventionally, the individual cast lens is manually removed from the mold, and placed on a test tray. Light is then transmitted through the cast lens and directed onto a screen where certain deformities in the cast lens may be visually detected.

In general, the manufacture of contact lens is conventionally labour intensive, requiring manual handling and visual inspection of the cast lens during several stages of production, and further requiring manual removal of the ring of excess lens material.

A general object of the present invention is to reduce the manual labour expended in the manufacture of contact lenses.

According to one aspect of the present invention there is provided a contact lens inspection system comprising: a contact lens support; a light source for illuminating a contact lens located on said contact lens support; a light receiving unit; wherein said contact lens support is a mold member used to mold the contact lens located thereon; and wherein said mold member is formed of a relatively transparent plastic material and comprises a convex portion having a convex surface and an outer surface opposite said convex surface, said outer surface having an optical finish to permit optical inspection of a lens located on said convex surface by transmitting light from said light source through said outer surface, said mold member, said convex surface and the lens to the light receiving unit.

According to another aspect of the present invention there is provided a contact lens inspection system comprising: a contact lens support; a light source for illuminating a contact

AUSTRALIAN PATENT OFFICE

lens located on said contact lens support; a light receiving unit, wherein said contact lens support is a mold member used to mold the contact lens located thereon; and wherein said mold member is formed of a relatively opaque plastic material and comprises a convex portion having a convex surface, and wherein said convex surface is provided with an optical finish to permit optical inspection of a lens located on said convex surface by reflecting light off of said convex surface and through the lens to the light receiving unit.

According to yet another aspect of the present invention there is provided a contact lens inspection system comprising: a contact lens support; a light source for illuminating a contact lens located on said contact lens support; a light receiving unit; wherein said contact lens support is a mold member used to mold the contact lens located thereon; and wherein said mold member is formed of a relatively transparent plastic material and comprises a concave portion having a concave surface and an outer surface opposite said concave surface, said outer surface having an optical finish to permit optical inspection of a lens located on said concave surface by transmitting light from said light source through said outer surface, said mold member, said concave surface and the lens to the light receiving unit.

According to yet another aspect of the present invention there is provided a contact lens inspection system comprising: a contact lens support; a light source for illuminating a contact lens located on said contact lens support; a light receiving unit; wherein said contact lens support is a mold member used to mold the contact lens located thereon; and wherein said mold member is formed of a relatively opaque plastic material and comprises a concave portion having a concave surface, and wherein said concave surface is provided with an optical finish to permit optical inspection of a lens located on said concave surface by reflecting light off of said concave surface and through the lens to the light receiving unit.

Preferred embodiments of the invention will be hereinbefore described with reference to the accompanying drawings.

FIG. 1 is a sectional view of a two-sided lens mold according to one embodiment of the

present invention;

FIGs. 2a and 2b are sectional views for explaining the mechanical engagement of excess lens material to the two-side lens mold of the present invention;

FIGs. 3-8 are sectional views of a two-sided lens mold according to other embodiments of the present invention;

FIGs. 9 and 10 are sectional views for explaining the utility of a contact lens mold according to another embodiment of the present invention.

As shown in FIG. 1, the two-sided lens mold of the present invention includes a first mold member 1 having a concave surface portion 3, and a second mold member 2 having a convex surface portion 4. A cavity 5 for forming the lens is provided when the outer rim 6 of the concave surface portion 3 is made to contact the convex portion 4 as shown. Such contact is achieved by engagement (such as by friction fitting members 11 or by mechanical clamping) of the first and second mold members 1, 2. The surfaces of the lens are thus formed in conformity with the respective surfaces of the convex and concave surface portions 3, 4. The curvature of the lens, and thus the curvature of the convex and concave surface portions 3, 4 are specified in advance to comply with optical requirements. The first and second mold members 1, 2 may be formed by known

AUSTRALIAN PATENT OFFICE

techniques, such as by injection molding.

Furthermore, the first and second mold members 1, 2 may optionally be formed of different plastic materials having different degrees of wettability. That is, for example, the first mold member 1 may be made from relatively polar plastic materials, and the second mold member 2 may be made from relatively non-polar plastic materials. Alternately, the first mold member 1 may be made from relatively non-polar plastic materials, and the second mold member 2 may be made from relatively polar plastic materials.

Examples of relatively polar plastic materials include polymethylmethacrylate, polyvinylchloride, polycarbonate, polyamide, polyurethane, polyester, polysulfone, polystyrene, polyphenyleneoxide, etc., or copolymers, or blends of like materials.

Examples of relatively non-polar plastic materials include polypropylene, polyethylene, poly[methylpentene], etc. or copolymers, or blends of like materials.

Accordingly, as those skilled in the art will appreciate, by the proper selection of the lens material and the polar and non-polar plastic materials of the first and second mold members 1, 2, the lens may be directed to adhere to the desired surface (concave or convex) of the two-sided mold upon separation of the first and second mold members 1, 2.

Accordingly, as those skilled in the art will further appreciate, the relative polarity of the plastic mold materials selected will depend on the polarity of the lens material itself. Moreover, the degree of polarity of each plastic mold material is dependent upon the amount or number of polar groups that may occur in the polymer backbone or side chains. Therefore, two different mold materials having different relative polarities may be selected from the "relatively polar materials" listed above for respectively forming the mold members 1, 2, to achieve the same desired effect. Similarly, two different mold materials may instead be selected from the "relatively non-polar materials" listed above.

According to one embodiment of the present invention, the first mold member 1 is provided with an annular surface 9 extending upwardly and inwardly (i.e. Θ is less than 90°) towards a longitudinal axis 15 from the outer rim 6 of the concave surface portion 3. That is, if the annular surface 9 tapers inwardly at a constant angle as shown, the annular surface 9 is frusto-conical.

The engagement of excess lens material according to the present invention will now be described with reference to FIGs. 2a and 2b.

During the manufacture of the contact lens, lens material of a sufficient quantity to exceed the volume defined by the cavity 5 is placed on the concave surface portion 3 or the convex surface portion 4. The first mold member 1 is moved relative the second mold member 2 to form the cavity 5. The quantity of lens material in excess of the volume defined by the cavity 5 is collected along the outer periphery of the cavity 5 in the form of a ring 8.

Suppose, as described above, that the lens material and the plastic materials of the first and second members 1, 2 shown in FIG. 2a are selected such that the lens 7 is directed to adhere to the convex surface portion 4 of the second mold member 2.

Upon polymerization of the lens material, the first and second mold members 1, 2 are separated to expose the cast lens 7 as shown in FIG. 2b. The cast lens 7 adheres to the convex surface portion 4 due to the selection of the lens material and the relatively non-polar and polar plastic materials of the first and second mold members 1, 2. For the same reasons that the lens 7 tends to adhere to the second mold member 2, the ring 8 of excess lens material will also tend to adhere to the second mold member 2.

However, the ring 8 of excess lens material is mechanically engaged with the first mold member 1 due to the inwardly extending annular surface 9. It is noted that the angle Θ of the inwardly extending annular surface 9 may extend only very slightly inwardly to operate as intended.

Accordingly, upon separation of the first and second mold members 1, 2, the first mold member 1 having the ring 8 of excess lens material engaged therewith may be discarded, and the second mold member 2 having the cast lens 7 adhered to the convex surface portion 4 may be conveyed to further processing steps without individual handling of the cast lens itself and without inspection and removal of the ring 8 of excess lens material.

Other embodiments of the ring engaging mechanism of the present invention will now be described with reference to FIGs. 3-7.

As shown in FIG. 3, the annular surface 9 may be provided such that Θ equals or nearly

equals 90°. In the annular surface 9 is formed a round under cut 31. As the excess lens material polymerizes along the annular surface 9, such excess lens material will form within the round under cut 31 and will thus be mechanically engaged with the mold member 1, As shown in FIG. 5, a rectangular notch 32 may be provided in place of or in addition to the round under cut 31 shown in FIG. 3.

As shown in FIG. 4, the annular surface 9 is provided with an outwardly extending lip member 33 for engaging the ring of excess lens material. The lip member 33 may be formed at the lower edge of the annular surface 9 as shown, or the lip member 33 may be formed elsewhere along the annular surface 9.

As shown in FIG. 6, the concave portion 3 is further defined by an outwardly extending annular member 34 having a lower surface 35. The lower surface 35 has formed thereon a ring engaging member 36. The ring engaging member 36 includes a portion extending inwardly and downwardly from the lower surface 35 to form an annular void 37 as shown. The excess lens material flows into the annular void 37 and, upon polymerization, is thereby mechanically engaged with the mold member 1.

As shown in FIG. 7, a non-mechanical locking arrangement is provided for engaging the excess lens material. Suppose again that the first mold member 1 is made of a relatively non-polar material and the second mold member (not shown) is made of a relatively polar material, thereby causing a cast lens to adhere to the relatively polar material of the second member. According to one embodiment of the present invention, a sleeve 38 is provided along the periphery of the outer rim 6 of the first mold member 1. By forming the sleeve of a relatively more polar material with respect to the relatively polar material of the second mold member, the ring of excess lens material will exhibit an affinity to adhere to the relatively more polar material of the sleeve 38.

Although several embodiments of the ring engaging mechanism of the present invention have been herein described with reference to FIGS. 1-7, it is understood that those skilled in the art may contemplate other specific configurations without departing from the scope and spirit of the present invention. Moreover, although the embodiments discussed above illustrate the engagement of the ring of excess lens material to the concave portion of the mold, the ring of excess lens material may instead be directed to engage the convex side of the mold. For example, as shown in FIG. 8, the convex portion 4 may include the inwardly extending annular surface 9 of the embodiment shown in Fig. 1 for engaging the ring of

excess lens material. Similarly, the other embodiments of the present invention may be applied to the convex portion of the mold.

Still another feature of the present invention will be described with reference to FIG. 9. Suppose, as discussed above with reference to FIGs 2a and 2b, that the cast lens 7 has adhered to the convex portion 4 of the second mold member 2. According to the embodiment shown in FIG. 9, optical inspection of the cast lens 7 may be carried out without removing the cast lens 7 from the convex surface portion 4.

As shown in FIG. 9, the second mold member 2 is formed of a relatively transparent plastic and a bottom surface 10 thereof is provided with an optical finish. The thus formed second mold member 2 is placed between a light source 20 and a light receiving unit 21, whereby light is transmitted from the light source 20 (either directly or by reflection), through the second mold member 2, through the cast lens 7, and to the light receiving unit 21. The light receiving unit 21 may be a projection screen, in which case deformities in the cast lens 7 and debris in the second mold member 2 may be detected by visual inspection of the pattern cast on the projection screen. It is also contemplated that the light receiving unit 21 may be a CCD image sensor apparatus in which deformities in the cast lens 7 and debris in the second mold member 2 are detected automatically.

An alternative arrangement may be provided as shown in FIG. 10, in which the second mold member 2 is formed of a relatively opaque plastic and an upper surface 40 thereof, including the convex surface, is provided with a reflective optical finish. The thus formed second mold member 2 is placed in relation to the light source 20 and the light receiving unit 21 such that light is reflected off of the upper surface 40 and through the cast lens 7 to the light receiving unit 21. Deformities in the cast lens 7 and debris in the second mold member 2 can thus be detected in the same manner as discussed above with respect to FIG. 9.

As is known to those skilled in the art, the tooling members for forming the lens mold are provided with an optical finish, by polishing for example, only at surface portions thereof which conform to the lens defining surfaces of the lens mold. In the same manner, the optical finishes discussed above with respect to FIGs. 9 and 10 may be obtained.

Furthermore, a spin cast method of manufacturing contact lenses is known in the art whereby only one mold member is utilized. Briefly, in such a method, a single mold

member is provided with a quantity of lens material on a concave surface thereof and is then rotated, whereby centrifugal forces act on the lens material to form a contact lens. The aspects and advantages of the present invention as discussed above with respect to FIGs. 9 and 10 are equally applicable to such a mold member used in the spin cast technique.

According to the lens mold of the present invention, a lens may be cast and optically inspected without manual handling of the lens itself. Furthermore, especially when the cast lens is made to adhere to one side of a two-sided mold, the ring of excess lens material may be directed to adhere to the other side of the two-sided mold.

The present invention is noted limited to applications involving a two-sided lens mold made of material having different degrees of wettability. That is, the ring engaging mechanism and the optically finished surfaces of the present invention may be utilised and the advantages realised even in the case where is no control of the adherence of the cast lens.

Throughout this specification, unless the context requires otherwise, the word "comprise", or variations such as "comprises" or comprising" or the term "includes" or variations thereof, will be understood to imply the inclusion of a stated element or integer or group of elements or integers but not the exclusion of any other element or integer or group of elements or integers. In this regard, in construing the claim scope, an embodiment where one or more features is added to any of the claim is to be regarded as within the scope of the invention given that the essential features of the invention as claimed are included in such an embodiment.

Still furthermore, although the discussion above is directed primarily to soft contact lenses, the present invention is not seen to be so limited, and may be directed to the manufacture of any other polymeric lenses.

AUSTRALIAN PATENT OFFICE

THE CLAIMS DEFINING THE INVENTION ARE AS FOLLOWS:

1. A contact lens inspection system comprising:

a contact lens support;

a light source for illuminating a contact lens located on said contact lens support;

a light receiving unit;

wherein said contact lens support is a mold member used to mold the contact lens located thereon; and

wherein said mold member is formed of a relatively transparent plastic material and comprises a convex portion having a convex surface and an outer surface opposite said convex surface, said outer surface having an optical finish to permit optical inspection of a lens located on said convex surface by transmitting light from said light source through said outer surface, said mold member, said convex surface and the lens to the light receiving unit.

2. A contact lens inspection system comprising:

a contact lens support;

a light source for illuminating a contact lens located on said contact lens support;

a light receiving unit;

wherein said contact lens support is a mold member used to mold the contact lens located thereon; and

wherein said mold member is formed of a relatively opaque plastic material and comprises a convex portion having a convex surface, and wherein said convex surface is provided with an optical finish to permit optical inspection of a lens located on said convex surface by reflecting light off of said convex surface and through the lens to the light receiving unit.

3. A contact lens inspection system according to claim 1 or 2, wherein said light receiving unit is a projection screen.

4. A contact lens inspection system according to claim 1 or 2, wherein said light

AUSTRALIAN PATENT OFFICE

receiving is a CCD image sensor apparatus.

5. A contact lens inspection system according to claims 1-4, with a lens mold comprising:

a first mold member comprising a concave portion, said concave portion having a concave surface centered at a longitudinal axis of said first mold member, an outer rim located along a periphery of said concave surface, and ring engaging means disposed adjacent said outer rim for engaging, upon polymerization of a lens material within a lens cavity, excess lens material formed along an outer periphery of the lens cavity; and

said second mold member comprising said convex portion having said convex surface, wherein the lens cavity is defined between said concave and convex surfaces when said outer rim of said concave portion of said first mold member is made to contact said convex portion of said second mold member;

whereby, upon polymerization of the lens material and upon a separation of said first and second mold members, the excess lens material is engaged with said first mold member.

6. A contact lens inspection system according to claim 5, wherein said ring engaging means of said concave portion comprises an annular surface extending inwardly towards the longitudinal axis of said first mold member from said outer rim.

7. A contact lens inspection system according to claim 6, wherein said annular surface is frusto-conical.

8. A contact lens inspection system according to claim 5, wherein said ring engaging means of said concave portion comprises an annular surface extending substantially parallel to the longitudinal axis of the first mold member, and a notch formed in and along said annular surface.

9. A contact lens inspection system according to claim 8, wherein said notch defines a void within said annular surface having a rounded cross-section for receiving a portion of the

AUSTRALIAN PATENT OFFICE

excess lens material.

10. A contact lens inspection system according to claim 8, wherein said notch defines a void within said annular surface having a rectangular cross-section for receiving a portion of the excess lens material.

11. A contact lens inspection system according to claim 5, wherein said ring engaging means of said concave portion comprises an annular surface extending substantially parallel to the longitudinal axis of said first mold member, and a lip member extending outwardly from said annular surface.

12. A contact lens inspection system according to claim 5, wherein said ring engaging means of said cave portion comprises a first annular surface extending outwardly along the periphery of the lens cavity from the outer rim, and an annular member extending from said first annular surface, said annular member defining a second annular surface extending inwardly towards the longitudinal axis of said first mold member from said first annular surface, wherein an annular void for receiving the excess lens material is defined by said outer rim, said first annular surface and said second annular surface.

13. A contact lens inspection system according to claim 5, wherein said ring engaging means of said concave portion comprises an annular member made of a first plastic material disposed along a periphery of said outer rim, and wherein said second mold member is made of a second plastic material, and wherein said first plastic material is more polar relative to said second plastic material, whereby the excess lens material will exhibit an affinity to adhere to said annular member upon the separation of said first and second mold members.

14. A contact lens inspection system according to claim 13, wherein said first mold member at said concave surface is made of a third plastic material, and wherein said second plastic material is more polar relative to said third plastic material, whereby a polymerized lens within the lens cavity will exhibit an affinity to adhere to said convex surface upon the

AUSTRALIAN PATENT OFFICE

separation of said first and second mold member.

15. A contact lens inspection system according to any one of the claims 5-12, wherein said first mold member is made of a relatively non-polar plastic material, said second mold member is made of a relatively polar plastic material, whereby a polymerized lens within the lens cavity will exhibit an affinity to adhere to said convex surface upon the separation of said first and second mold members.

16. A contact lens inspection system comprising:

a contact lens support;

a light source for illuminating a contact lens located on said contact lens support;

a light receiving unit;

wherein said contact lens support is a mold member used to mold the contact lens located thereon; and

wherein said mold member is formed of a relatively transparent plastic material and comprises a concave portion having a concave surface and an outer surface opposite said concave surface, said outer surface having an optical finish to permit optical inspection of a lens located on said concave surface by transmitting light from said light source through said outer surface, said mold member, said concave surface and the lens to the light receiving unit.

17. A contact lens inspection system comprising:

a contact lens support;

a light source for illuminating a contact lens located on said contact lens support;

a light receiving unit;

wherein said contact lens support is a mold member used to mold the contact lens located thereon; and

wherein said mold member is formed of a relatively opaque plastic material and comprises a concave portion having a concave surface, and wherein said concave surface is provided with an optical finish to permit optical inspection of a lens located on said concave

AUSTRALIAN PATENT OFFICE

surface by reflecting light off of said concave surface and through the lens to the light receiving unit.

18. A contact lens inspection system according to claim 16 or claim 17, wherein said light receiving unit is a projection screen.

19. A contact lens inspection system according to claim 16 or claim 17, wherein said light receiving unit is a CCD image sensor apparatus.

20. A contact lens inspection system according to any one of claims 16-19, with a lens mold comprising:

a first mold member comprising a convex portion, said convex portion having a convex surface centered at a longitudinal axis of said first mold member, an outer rim located along a periphery of said convex surface, and ring engaging means disposed adjacent said outer rim for engaging, upon polymerization of a lens material within a lens cavity, excess lens material formed along an outer periphery of the lens cavity; and

said second mold member comprising said concave portion having said concave surface, wherein the lens cavity is defined between said concave and convex surfaces when said outer rim of said convex portion of said first mold member is made to contact said concave portion of said second mold member;

whereby, upon polymerization of the lens material and upon a separation of said first and second mold members, the excess lens material is engaged with said first mold member.

21. A contact lens inspection system according to claim 20,

wherein said ring engaging means of said convex portion comprises an annular surface extending inwardly towards the longitudinal axis of said first mold member from said outer rim.

22. A contact lens inspection system according to claim 21, wherein said annular surface is frusto-conical.

AUSTRALIAN PATENT OFFICE

23. A contact lens inspection system according to claim 20, wherein said ring engaging means of said convex portion comprises an annular surface extending substantially parallel to the longitudinal axis of the first mold member, and a notch formed in and along said annular surface.

24. A contact lens inspection system according to claim 23, wherein said notch defines a void within said annular surface having a rounded cross-section for receiving a portion of the excess lens material.

25. A contact lens inspection system according to claim 23, wherein said notch defines a void within said annular surface having rectangular cross-section for receiving a portion of the excess lens material.

26. A contact lens inspection system according to claim 20, wherein said ring engaging means of said convex portion comprises an annular surface extending substantially parallel to the longitudinal axis of said first mold member, and a lip member extending outwardly from said annular surface.

27. A contact lens inspection system according to claim 20, wherein said ring engaging means of said convex portion comprises a first annular surface extending outwardly along the periphery of the lens cavity from the outer rim, and an annular member extending from said first annular surface, said annular member defining a second annular surface extending inwardly towards the longitudinal axis of said first mold member from said first annular surface, wherein an annular void for receiving the excess lens material is defined by said outer rim, said first annular surface and said second annular surface.

28. A contact lens inspection system according to claim 20, wherein said ring engaging means of said convex portion comprises an annular member made of a first plastic material disposed along a periphery of said outer rim, and wherein said second mold members is made of a second plastic material, and wherein said first plastic material is more polar relative to

AUSTRALIAN PATENT OFFICE

said second plastic material, whereby the excess lens material will exhibit an affinity to adhere to said annular member upon the separation of said first and second mold members.

29. A contact lens inspection system according to claim 28, wherein said first mold member at said convex surface is made of a third plastic material, and wherein said second plastic material is more polar relative to said third plastic material, whereby a polymerised lens within the lens cavity will exhibit an affinity to adhere to said concave surface upon the separation of said first and second mold members.

30. A contact lens inspection system according to claim 20-27, wherein said first mold member is made of a relatively non-polar plastic material, and said second mold member is made of a relatively polar plastic material, whereby a polymerised lens within the lens cavity will exhibit an affinity to adhere to said convex surface upon the separation of said first and second mold members.

Dated this 12th day of June, 1997

CIBA GEIGY AG

By Their Patent Attorneys

DAVIES COLLISON CAVE

AUSTRALIAN PATENT OFFICE

CL/V-19676/A/CGV 1713

LENS MOLD

ABSTRACT

A lens mold includes first and second mold members respectively having a concave surface and a convex surface for defining therebetween a lens cavity. One of the first and second mold members is configured to mechanically engage a ring of excess lens material upon polymerization of the lens material. Alternately, one of the first and second mold members includes a material formed along the periphery of a lens cavity which causes the ring of excess lens material thereto. Furthermore, one of the first and second mold members is formed of a relatively transparent plastic material and includes an inner surface having an optical finish to permit optical inspection of a lens located on one of the concave and convex surfaces. Alternately, one of the first and second mold members is formed of a relatively opaque plastic material and includes an inner surface having an optical finish to permit optical inspection of a lens located on one of the concave and convex surfaces.

(Fig. 1)

FIG. 1

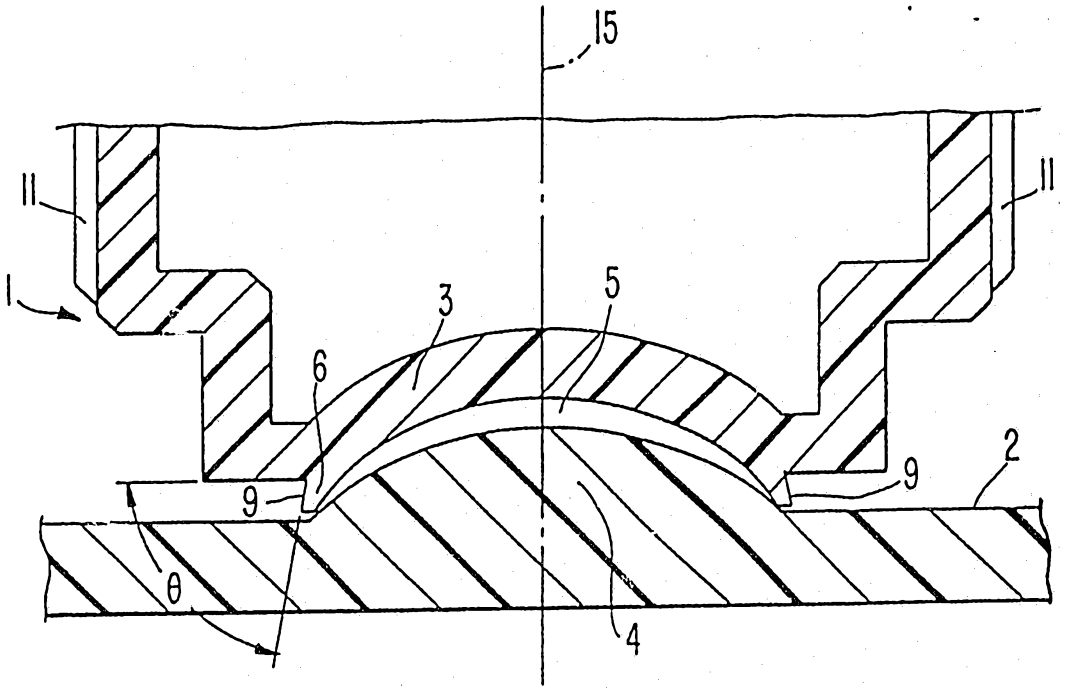

FIG. 3

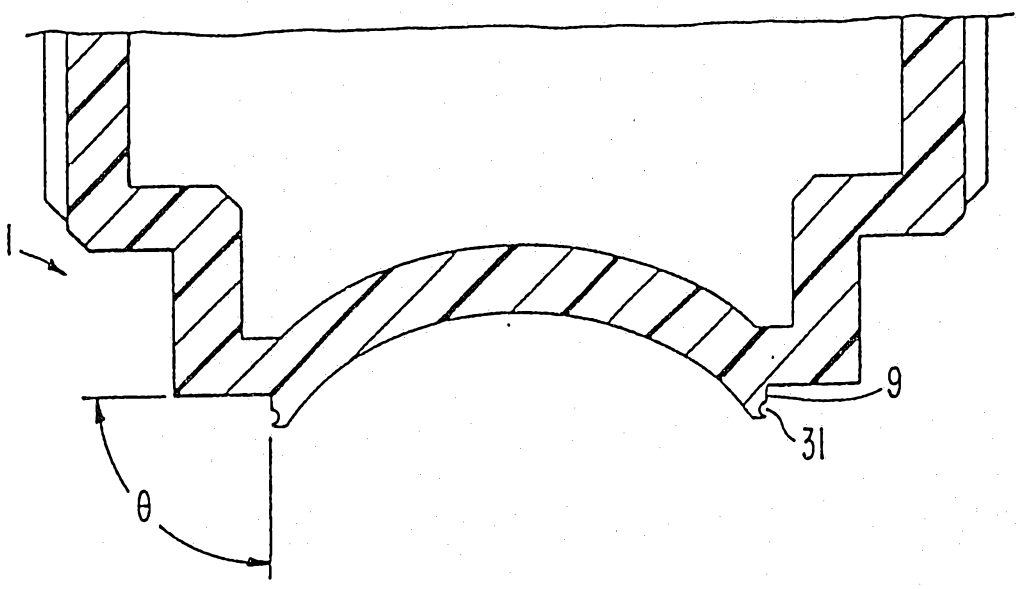

67535/94

FIG. 2(a)

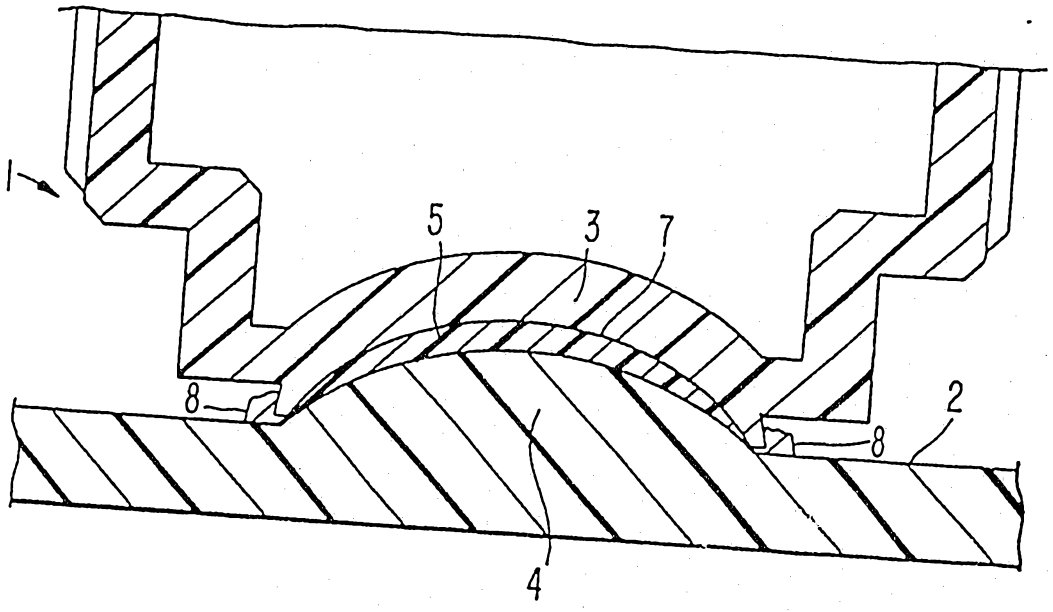

FIG. 2(b)

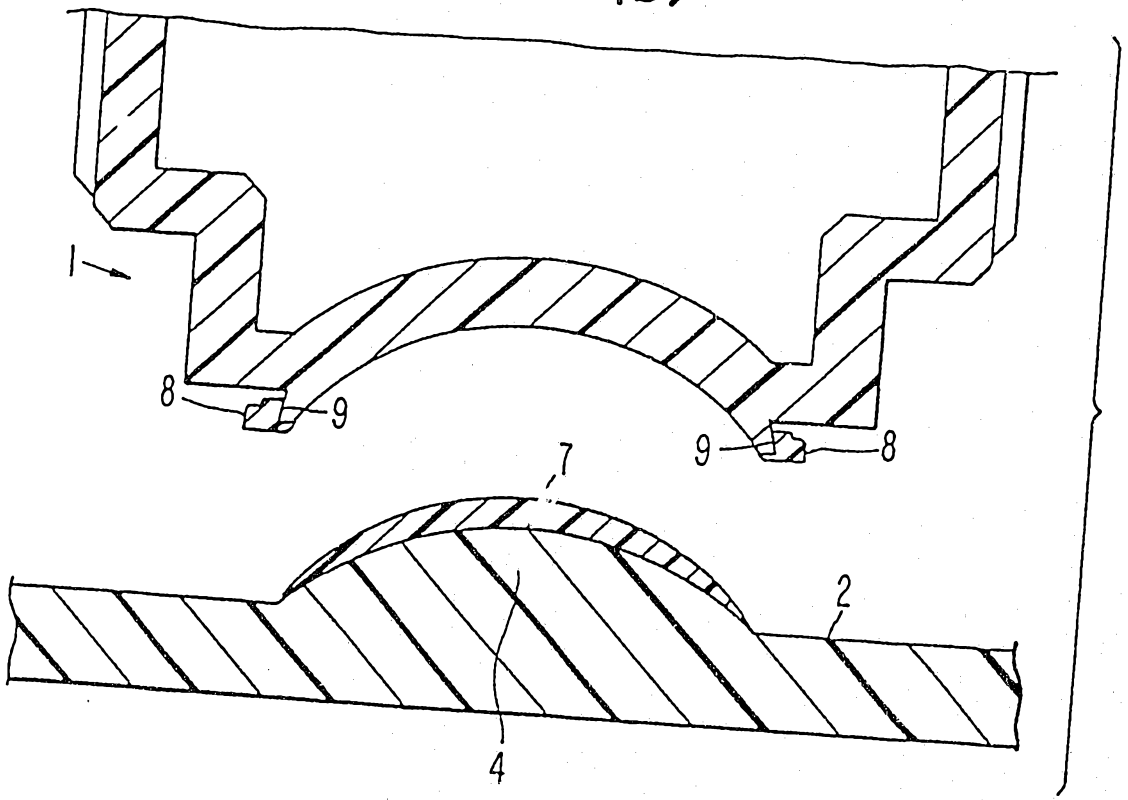

FIG. 4

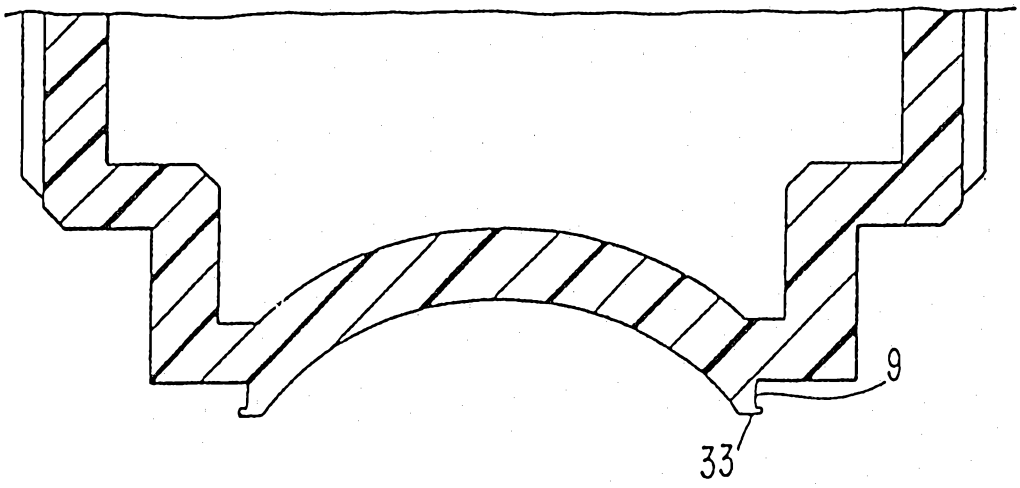

FIG. 5

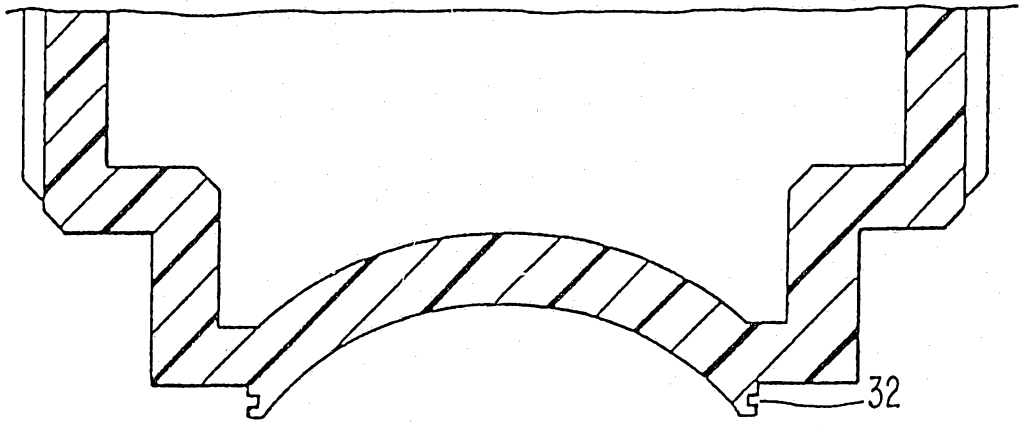

FIG. 6

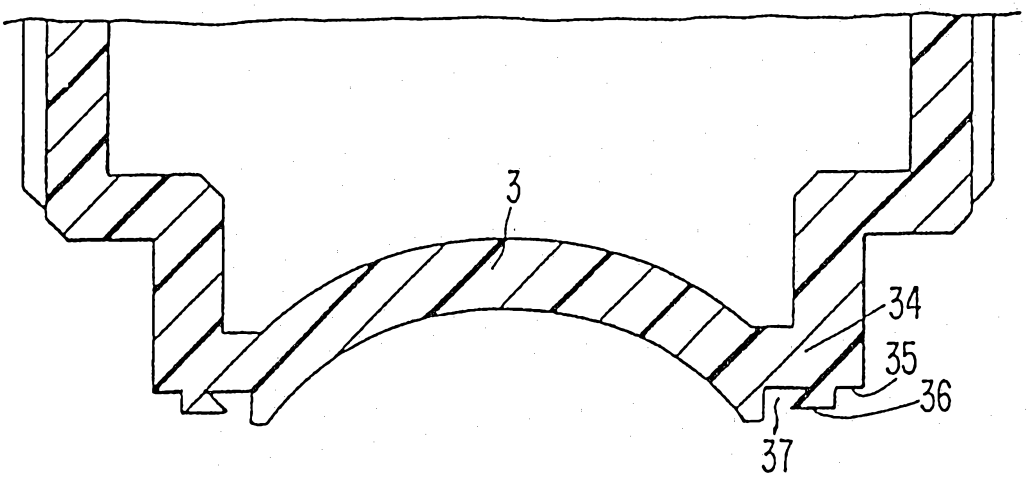

FIG. 7

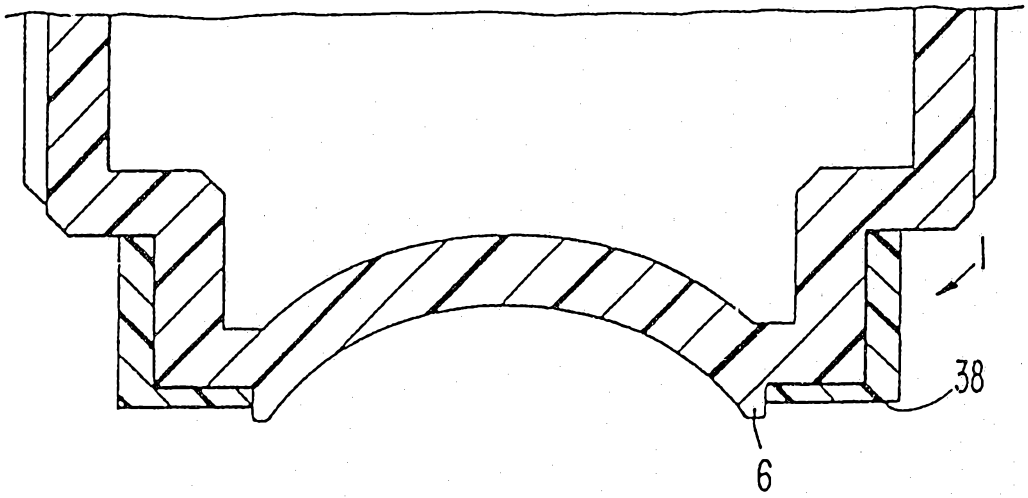

FIG. 8

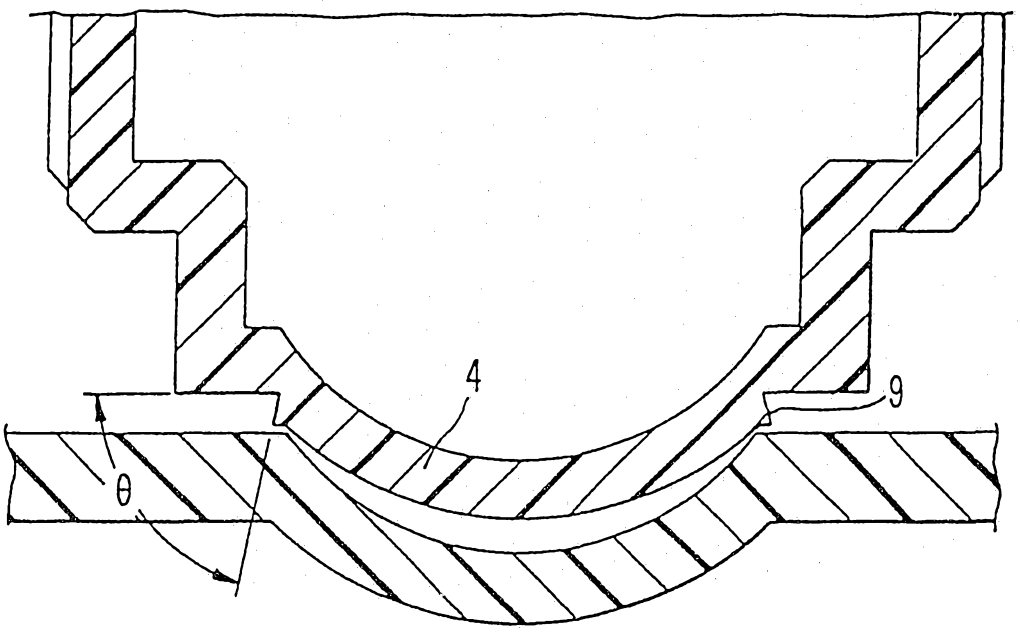

FIG. 9

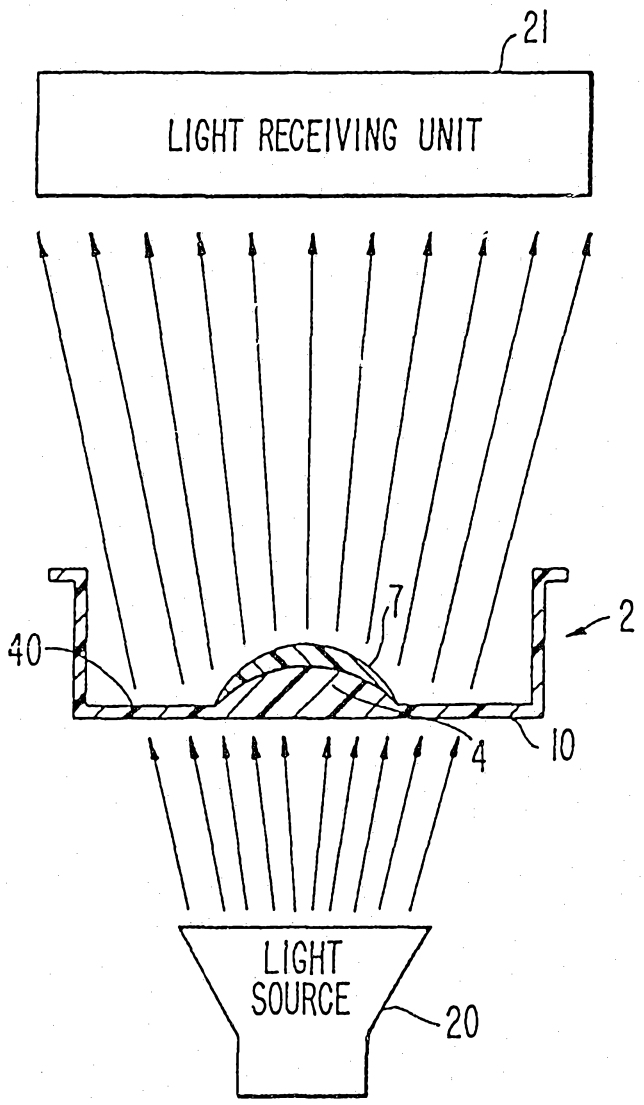

FIG. 10

