Dec. 15, 1964 A. S. TAYLOR ETAL 3,161,195

TWO-COMPARTMENT ASPIRATING HYPODERMIC SYRINGE

Filed Jan. 29, 1963 2 Sheets-Sheet 1

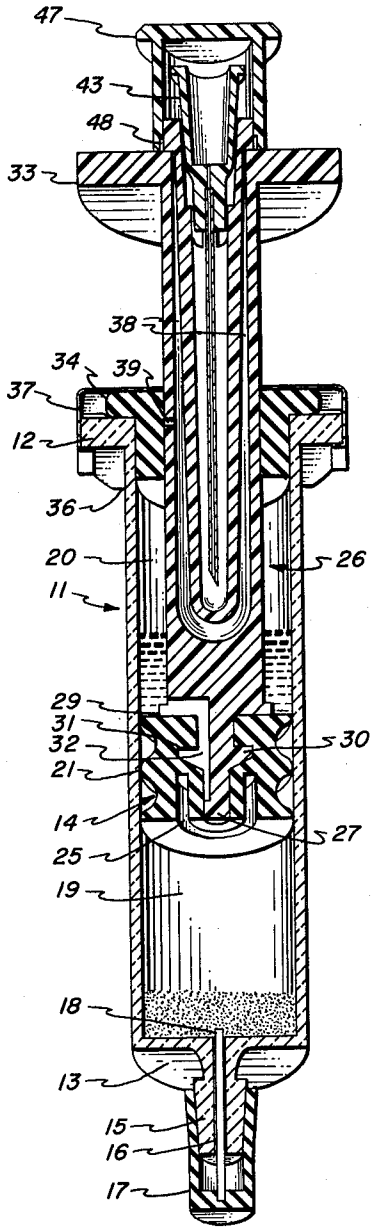

FIG - 1

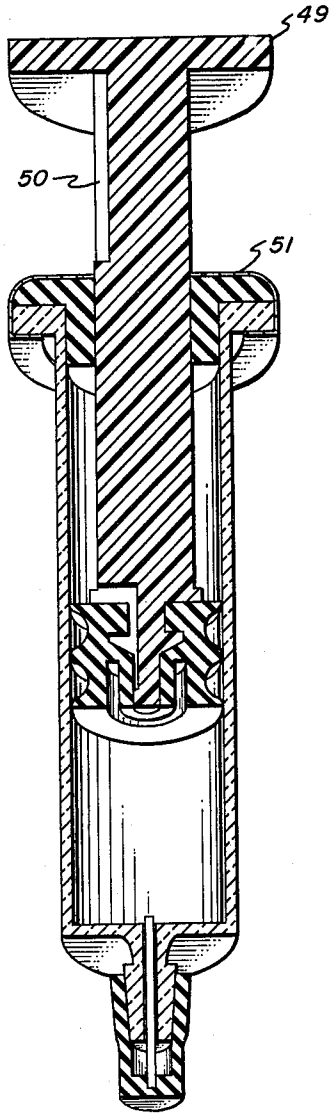

FIG - 2

INVENTORS.
ARTHUR S. TAYLOR
ELLSWORTH R. SANDHAGE
BY
Samuel Branch Walker
ATTORNEY

Dec. 15, 1964 A. S. TAYLOR ETAL 3,161,195

TWO-COMPARTMENT ASPIRATING HYPODERMIC SYRINGE

Filed Jan. 29, 1963 2 Sheets-Sheet 2

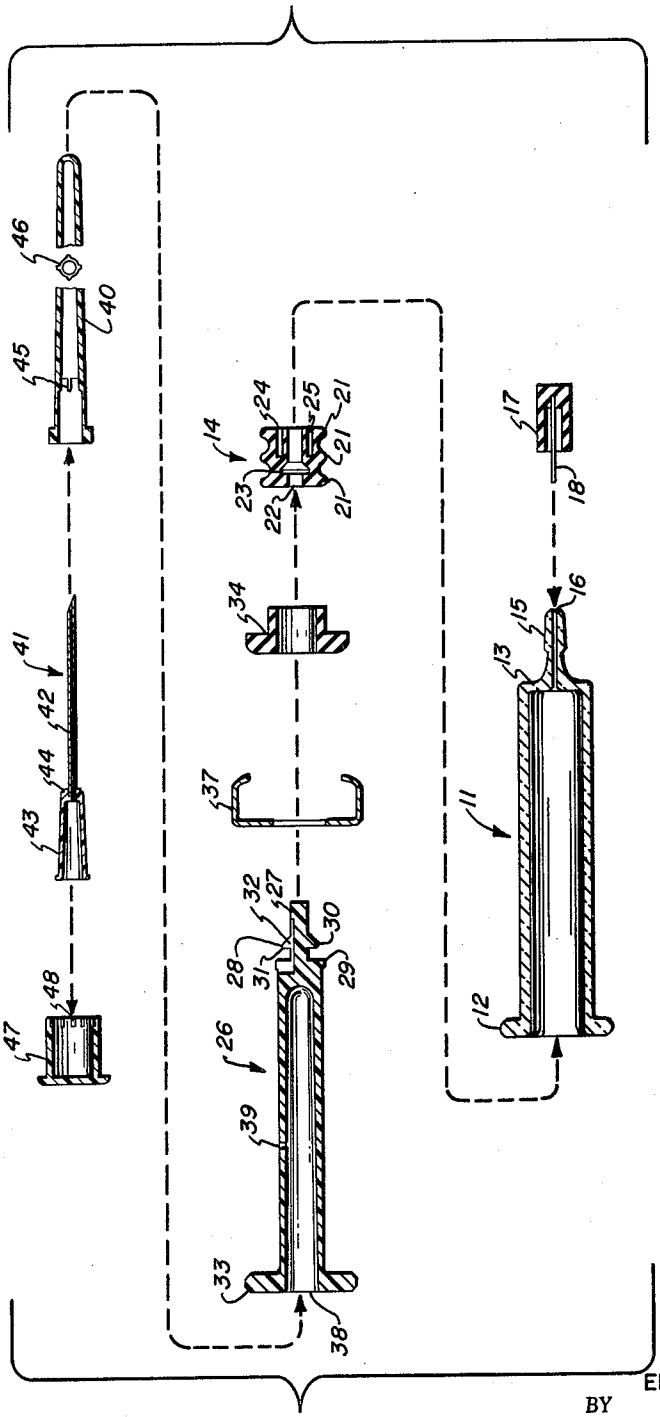

FIG. 3

INVENTORS.
ARTHUR S. TAYLOR
ELLSWORTH R. SANDHAGE

BY

Samuel Brandt Walker

ATTORNEY

United States Patent Office 3,161,195 Patented Dec. 15, 1964

3,161,195

TWO-COMPARTMENT ASPIRATING HYPODERMIC SYRINGE

Arthur Sinclair Taylor, Spring Valley, and Ellsworth Roland Sandhage, Pearl River, N.Y., assignors to American Cyanamid Company, Stamford, Conn., a corporation of Maine

Filed Jan. 29, 1963, Ser. No. 254,766
7 Claims. (Cl. 128—220)

This invention relates to a two-compartment hypodermic syringe package providing for the storage of a solid component and a liquid component of an injectable product under sterile conditions with the solid component ahead of a piston and the liquid behind the piston and a one-way valve through the piston so that the liquid is transferred to and mixed with the solid in preparation for injection, and which piston is attached to the plunger so that on injection the location of the needle may be checked by aspiration; and which in a preferred embodiment provides for the hypodermic needle to be stored in the plunger.

The piston on the plunger incorporates a unique type of sleeve-valve in which a resilient sleeve overlies a part of the plunger having at least one passage for the liquid so that the liquid flows through the passage, and expands the flexible sleeve for permitting the liquid to flow one way only, and which by its natural resilience closes against the plunger so as to give a positive one-way action with no leakage up to pressures sufficient to mechanically rupture the components.

In pharmaceutical practice, there are many products whose injection hypodermically is desired but which products must be dry for reasonable shelf life and must, therefore, be mixed with a liquid diluent just prior to injection. The diluent itself may contain pharmacologically effective constituents, or solubilizing constituents.

The art has long been familiar with various efforts to provide a hypodermic syringe in which a solid component could be stored with a separate compartment for a liquid diluent so that the two could be mixed just prior to injection. Among such is United States Patent 1,154,677, J. H. Wedig, "Hypodermic Syringe," September 28, 1915, in which a solid medicament is stored ahead of a plunger in a hypodermic syringe barrel, complete with hypodermic needle, which plunger serves as a container for a liquid so that the plunger may be withdrawn and the liquid poured into the barrel, the liquid and the solid thus mixed, and used for injection. A variant on this appears in United States Patent 1,702,654, E. D. Kellogg, "Reptile-Venom-Antidote Container," February 19, 1929, in which the entire package is in compact cartridge configuration for long storage. To avoid the exposure of the solid and/or the liquid to air, and compromise of sterility during reconstitution, various devices have been developed in which the liquid and solid components could be mixed by various manipulations, as for example by rupturing a diaphragm, as shown in United States Patent 1,943,120, S. Kabnick, "Hypodermic Syringe," January 9, 1934.

Another approach to the problem has been to store the solid and liquid portions of the pharmaceutical preparations in separate compartments of a container so that the liquid may be withdrawn from one compartment by puncturing a stopper with a hypodermic needle and transferred to and mixed with the solid components, which mixture is then withdrawn from the second chamber for administration. Such a device in which the container can be likened to two glass vials with a common bottom serving as compartments is shown in Canadian Patent 550,864, J. C. Bird and Henry C. Wendt, Jr., "Bottle," December 31, 1957. Such a common container insures that

the proper pair of components are stored and used together.

It is desirable that a package and hypodermic syringe combination be producible at such a low cost as to be disposable and that powder or other solid be completely separate from the liquid so that even moisture-sensitive powder medicaments can be stored at full potency for a prolonged period, and that the product be readily mixed for administration with a minimum of chance for error in manipulation, or compromise of sterility; and that the package preferably have available with it a hypodermic needle and; additionally, that the package be economical to manufacture and of such design that the product can be economically assembled in sterile form with a minimum chance of manufacturing error or compromise of sterility. A minimum dead space, or volume of liquid which cannot be injected is desirable.

The invention, comprising the features of construction and combination of elements and arrangement of parts to achieve these objectives and others which will be obvious from an inspection of the construction hereinafter set forth, is set forth in the description below, which applies to a specific embodiment. It is to be understood that certain of the features of construction of the preferred embodiment, together with their advantages, may be omitted while coming within the scope of the present invention, which is defined in the appended claims.

A fuller understanding of the nature and objects of the invention is had by studying the following detailed description and the accompanying drawings, in which:

FIGURE 1 is a pictorial partially sectional view of the combination package and syringe, including a needle stored in the plunger;

FIGURE 2 is a modification showing a solid plunger without provision for a needle in section, as a pictorial; and

FIGURE 3 is a diagrammatically exploded view showing the various components of the syringe and package of FIGURE 1 with the components appearing separately for clarity.

In the embodiment shown in FIGURE 1, a generally cylindrical barrel 11 is formed of glass or plastic with a barrel flange 12 at the rear end and a transverse wall 13 at the forward end. When made of glass by manufacturing processes which are adapted thereto, the barrel may be a true cylinder. For many purposes it is more convenient that the barrel have a slight conical taper, as it is easier to withdraw the internal mold if there is a slight taper, and resiliency of the piston 14 permits its use in a barrel with a slight taper. The term forward end refers to the end at which the hypodermic needle is to be attached when used for injection and the rear end is used to refer to the end of the barrel which is manipulated by the operator and is opposed to the forward end. At the forward end is a needle holding tip 15. Conveniently this tip is integral with the forward wall and barrel but in accordance with conventional practice the tip may be of metal and separately attached. The tip has such taper as to fit in a conventional hypodermic needle. Where a metal tip is used, the standard Luer-lock type of fitting may be used in order that the needle may be locked on the tip. Such tips are conventional in the industry. Through the tip is a tip bore 16 for the discharge of the contents of the hypodermic syringe. On the tip is a tip shield 17, preferably of a resilient material such as natural or synthetic rubber or a resilient plastic, and molded to the tip shield is a bore pin 18 which passes into the tip bore to prevent the contents of the hypodermic syringe from flowing into and blocking the tip bore and to insure that the lumen of the tip bore is kept open. This bore pin is conveniently of metal and firmly retained in

the tip shield so that when the tip shield is removed the bore pin is also withdrawn. The tip shield keeps the end and outside of the needle holding tip sterile and serves to protect the front end of the hypodermic syringe from shock if dropped because of its resiliency.

Inside of the barrel is a resilient piston 14. Usually the piston is located near the center of the barrel during storage although it may be located at such a point that it divides the barrel into a forward compartment 19 and a rear compartment 20, each having such volume as is desired for a particular pharmaceutical product. For some products the forward compartment for the solid component is markedly smaller than the rear compartment for the liquid component, but the choice of size is such as to conveniently hold the selected components. On the outside of the piston for contact with the barrel is at least one annular ring 21. In the modification shown three annular rings are used to give greater protection against moisture leaking past the piston and greater directional control to prevent the piston from becoming cocked in the barrel. The use of a plurality of annular rings, such as three rings, each of which is comparatively narrow, reduces the area in contact between the piston and the barrel, thus reducing friction and the resiliency of the rings gives greater tolerance towards variations in the diameter of the barrel. Thus the barrels can be manufactured extremely economically and rapidly because the manufacturing tolerances are comparatively large. Inside of the piston and preferably axially is a passage 22 extending through the piston. Preferably this passage is circular and has a groove 23 extending into the piston. Towards the front of the passage is a resilient valve sleeve 24 preferably circular in cross section and surrounding which is a relief space 25. The resilient valve sleeve may extend completely forward of the main body of the piston. It is prefered that the sleeve be inset into the piston so that there is a minimum of dead space when the syringe is used.

The piston is attached to the forward end of a plunger 26. The forward end of the plunger is formed with a boss 27 which extends into the passage in the piston and has a cooperating enlargement 28 which fits into the retaining groove in the plunger and holds the piston firmly in position on the boss. Just behind the boss is a shoulder 29 against which the piston fits and which acts to keep the piston from sliding backwards on the plunger. The shoulder may be of greater diameter than the main body of the plunger, depending upon the capacity desired for the compartments. As shown in FIGURE 1, the enlargement on the boss has a forward conical configuration 30 and a flat rear configuration 31 so that the piston can slide over and be expanded by the conical configuration during assembly but is prevented from sliding off of the boss by the flat rear configuration of the enlargement. The forward end of the boss is slightly larger than and slightly expands the valve sleeve which is an integral part of the piston. Thus the resilience of the valve sleeve causes the valve sleeve to shrink slightly against the forward end of the boss. A liquid conduit 32 extends from the portion of the plunger behind the piston, and is in communication therewith, to the portion of the boss which is inside of the valve sleeve. The configuration shown in FIGURE 1 is a slot integrally molded in the boss at the time the plunger is manufactured. Drilled holes, or other shapes may be used.

In use, under pressure, liquid passes through the liquid conduit and slightly expands the valve sleeve and, hence, can readily flow between the plunger boss and the valve sleeve and into the forward compartment. Because the valve sleeve is slightly expanded by the boss the flow of liquid is prevented in the absence of operating pressures so that during storage there is no moisture leakage through the valve. Because the valve sleeve is pressed against the outside of the boss, the valve gives extremely effective one-way action and any reverse pressure tends

to force the resilient sleeve into the liquid conduit which is thus completely obstructed and the valve will be completely leakproof against reverse pressures normally associately with hypodermic syringes; and, in fact, does not leak until the pressures are sufficient to cause mechanical failure of some of the components. Conveniently, the plunger is a plastic molding, and the plastic itself would fail in compression before the valve would leak. At the rear end of the plunger is a thumb piece 33 against which the thumb of the operator presses during operation of the syringe.

A plunger sealing stopper 34 surrounds the plunger and fills the space between the plunger and the inside of the barrel to form the back end of the rear compartment.

Preferably the barrel is formed with a barrel finger flange 12. As shown in FIGURE 1, the finger flange has flat areas 36 so that the syringe will not roll when laid down on a flat surface. The stopper 34 is held in position by a stopper retainer 37 which may conveniently be a metal clip fitting over the stopper and fitting under the finger flanges or may be an aluminum seal of the type usually used to close rubber stoppered pharmaceutical bottles. The stopper 34 may be formed from an ordinary pharmaceutical stopper by cutting a hole therein large enough for the plunger.

During assembly the stopper retainer 37 is slid over the front end of the plunger, the stopper is slid over the plunger and then the piston is expanded and slid over the end of the boss on the plunger and contracts down around the boss so that the groove 23 encloses the enlargement 28. When the piston is inserted into the barrel, the barrel prevents the piston from expanding and thus firmly locks the piston on the forward end of the plunger.

At the rear of the plunger passing through the thumb piece 33 is a needle cavity 38. A vent port 39 communicates between the needle cavity and the outside of the plunger and is so located that it is closed by the stopper during shipment and storage.

Inside of the needle cavity is a needle sheath 40. The needle sheath is retained in the needle cavity 38 in the plunger 26 by friction or threads or other means to prevent it from falling out. If the sheath is of polyethylene it may be molded of such size that it is fractionally retained in the needle cavity without additional cost, which is the preferred construction. Inside of the needle sheath is a hypodermic needle 41 comprising a cannula 42 and a hub 43. The hub and cannula are of conventional configuration. Preferably the hub has hub lugs 44 which may be any form of projection or polygonal configuration which locks with the sheath lugs 45, which are interiorly of the needle sheath 40 and which thus prevent the rotation of the hypodermic needle inside of the hypodermic needle sheath. Preferably the hypodermic needle hub is a friction fit within the sheath so that it does not fall out of its own weight and the friction may be used to aid in placing the hypodermic needle on the needle holding tip 15. The outside of the needle sheath is conveniently formed with flutes 46 to prevent slippage of the sheath in the fingers while the needle is being placed on the tip. In FIGURE 3, the flutes are shown in a rotated section.

Outside of the sheath and fitting thereover is a needle sheath cap 47. This is conveniently molded to a frictional fit on the outside of the sheath so that it is held in position by friction and may be readily slid off but it protects the needle against contamination during storage. The needle sheath cap has short sterilizing gas passages 48 therein so that the cap may be placed part way on the sheath as the cap slides on the ridges between these passages and yet ethylene oxide as a sterilizing gas can freely pass through these passages to the inside of the needle sheath and sterilize the needle. Then when the needle sheath cap is completely engaged the gas passages are sealed off and sterility is retained. If other sterilizing

means are to be used the sterilizing gas passages may be omitted.

Method of Use

In use a solid component, as for example a powdered mixture of tetracycline with suitable adjuvants is placed in the forward compartment and water is placed in the rear compartment. The two components are separated from each other and the combination functions as a two-compartment package. The shelf life is not known, but is at least some several years, and may be a great many years. At the time when reconstitution is desired, the plunger is pulled back, thus decreasing the annular space between the barrel and the plunger, causing the liquid in the rear compartment to flow through the liquid conduit into the thus enlarged forward compartment. The powder quickly dissolves and is ready for injection. The tip shield is removed. The hypodermic needle in the needle sheath is removed from the rear of the plunger, the needle sheath cap removed and the hypodermic needle placed on the needle holding tip. The plunger is advanced, conveniently by pressing against the thumb piece while holding the barrel between the fingers and against the finger flange, with the needle pointing upwardly to permit the escape of gas present in the forward compartment. As the thumb piece advances the vent port 39 breaks the vacuum in the rear compartment permitting the needle and piston to slide forward more readily and free from the effects of vacuum in the rear compartment. After all trapped gas has escaped, the solution is ready for injection with the device being then used as a conventional hypodermic syringe. Because the valve sleeve presses against the boss and forms a very effective one-way valve, but requires considerable pressure to operate, the plunger may be pulled back slightly after insertion of the needle in the subject to check on the location of the insertion of the needle. If a vein or artery has been penetrated, blood is readily aspirated whereas if the needle is in tissue the usual resistance to aspiration for such a location exists. The present hypodermic syringe may be used for intramuscular, intravenous, or other hypodermic placement depending upon the medical requirements of the patient and the product. The user can be certain that its location is as desired, whatever that location may be.

Manufacture

During manufacture the formation of the components is by conventional and obvious means. The assembly may be accomplished by separately sterilizing the components and assembling under sterile conditions or the device may be assembled complete and sterilized by radiation as, for example, a beam of high voltage electrons, or X-rays, or radiation. Monoenergetic radiation from a cobalt or cesium source gives excellent results. When the method of assembly is to assemble the hypodermic needle, its sheath and sheath cap with the plunger the stopper retainer and the piston, the assembly may be sterilized by heat; then the tip shield is placed on the barrel and sterilized by heat; and then under aseptic conditions a heat-sensitive solid is inserted into the barrel, the piston inserted, the desired quantity of liquid added, and the stopper assembly and the stopper retainer positioned. A variant on this is to insert the needle sheath containing the needle separately as a final step which permits the use of a needle sheath and hypodermic needle which have been sterilized by ethylene oxide and are of plastics which would melt under steam sterilizing conditions.

The stopper and piston are coated with silicone oil to reduce friction in assembly, if desired. Coating the piston with silicone oil reduces the permeability of the stopper to moisture and prolongs the shelf life of moisture-sensitive solids in the package. A rubber composition of low moisture permeability is selected if required by operating conditions.

The modification shown in FIGURE 2 is similar in general configuration but has a solid plunger 49 in which is a vent slot 50 for breaking the vacuum in the rear compartment after the components have been mixed. In this modification an aluminum seal 51 is used to hold the stopper in position.

Other variants on this invention are obvious to those skilled in the art as, for example, the valve may be used in other types of construction. Other methods may be used for assembly, and the materials of construction may vary depending upon economic factors and the possible interactions by the medicament and component parts of the package. Such variations are within the scope of the present invention, which are defined by the following claims.

We claim:

1. A combination aspirating hypodermic syringe and two-compartment package comprising:

a generally cylindrical barrel, having at the rear end a barrel flange, and at the forward end a transverse wall, a needle holding tip extending outwardly from said wall, said wall and tip having therethrough a tip bore;

a tip shield on said tip, a bore pin extending from said tip shield substantially through said bore, and removable with the tip shield, to protect the sterility of the tip;

a resilient piston in said barrel and located toward the center of said barrel, dividing the barrel into a forward compartment, for a solid component, a solid medicament component therein, and a rear compartment, for a liquid component, a liquid component therein, and on said piston, at least one annular ring in sealing engagement with said barrel, said piston having therein an axial passage and a plunger retaining groove in said passage, and coaxial with said passage, and at the forward end thereof a resilient valve sleeve, concentrically spaced from the main portion of the piston;

a plunger extending from the rear into said barrel, the forward end of the plunger having thereon a boss extending into the axial passage in said piston, and having on said boss a cooperating enlargement entering into and cooperating with the groove in the passage in said piston, thereby firmly retaining the piston on said plunger, the plunger boss having such size as to extend into and at least slightly expand the valve sleeve on the piston, and in said plunger a liquid conduit extending from the portion of the plunger behind the piston in the rear compartment to the boss portion of the plunger inside of the resilient valve sleeve, and on the rear of the plunger and exterior of the barrel a thumb piece;

a plunger sealing stopper cooperating with the rear of the barrel and the plunger to form a liquid-tight seal therebetween; a stopper retainer, to hold said sealing stopper in position; and said plunger also having therein a vacuum breaking vent to introduce air into the rear compartment as the plunger moves forward of its storage position;

and said plunger also having therein a needle cavity, and in said cavity a needle sheath, means to retain the needle sheath in the needle cavity, a hypodermic needle comprising cannula and hub portions in said sheath, cooperating rotation preventing lugs on the exterior of said hub portion and interiorly of the needle sheath, to hold the hub against rotation while being applied to the needle holding tip; and a needle sheath cap fitting over and in engagement with said sheath to protect the hypodermic needle against contamination during storage;

said combination cooperating to maintain the contents of the forward compartment moisture-free during storage, and to transfer liquid from the rear compartment to the forward compartment or rearward movement of the plunger, causing mixture of the solid

and liquid components, discharge of gas by forward movement of the plunger and piston, permit attachment of the needle, aspiration as desired to confirm a desired location of the hypodermic needle on insertion, and hypodermic injection of the package contents, all operations being sterilely performed.

2. A combination aspirating hypodermic syringe and two-compartment package comprising:

a generally cylindrical barrel, having at the rear end a barrel flange, and at the forward end a transverse wall, a needle holding tip extending outwardly from said wall, said wall and tip having therethrough a tip bore;

a tip shield on said tip, a bore pin extending from said tip shield substantially through said bore, and removable with the tip shield, to protect the sterility of the tip;

a resilient piston in said barrel and located towards the center of said barrel, dividing the barrel into a forward compartment, for a solid component, and a rear compartment for for a liquid component, and on said piston at least one annular ring in sealing engagement with said barrel, said piston having therein an axial passage and a plunger retaining groove in said passage, and coaxial with said passage, and at the forward end thereof a resilient valve sleeve, concentrically spaced from the main portion of the piston;

a plunger extending from the rear into said barrel, the forward end of the plunger having thereon a boss extending into the axial passage in said piston, and having on said boss a cooperating enlargement entering into and cooperating with the groove in the passage in said piston, thereby firmly retaining the piston on said plunger, the plunger boss having such size as to extend into and at least slightly expand the valve sleeve on the piston, and in said plunger a liquid conduit extending from the portion of the plunger behind the piston in the rear compartment to the boss portion of the plunger inside of the resilient valve sleeve, and on the rear of the plunger and exterior of the barrel a thumb piece;

a plunger sealing stopper cooperating with the rear of the barrel and the plunger to form a liquid-tight seal therebetween; a stopper retainer, to hold said sealing stopper in position; and said plunger also having therein a vacuum breaking vent to introduce air into the rear compartment as the plunger moves forward of its storage position;

and said plunger also having therein a needle cavity, and in said cavity a needle sheath, means to retain the needle sheath in the needle cavity, a hypodermic needle comprising cannula and hub portions in said sheath, cooperating rotation preventing lugs on the exterior of said hub portion and interiorly of the needle sheath, to hold the hub against rotation while being applied to the needle holding tip; and a needle sheath cap fitting over and in engagement with said sheath to protect the hypodermic needle against contamination during storage;

said combination cooperating to maintain the contents of the forward compartment moisture-free during storage, and to transfer liquid from the rear compartment to the forward compartment on rearward movement of the plunger, causing mixture of the solid and liquid components, discharge of gas by forward movement of the plunger and piston, permit attachment of the needle, aspiration as desired to confirm a desired location of the hypodermic needle on insertion, and hypodermic injection of the package contents, all operations being sterilely performed.

3. A combination aspirating hypodermic syringe and two-compartment package comprising: a generally cylindrical barrel, having at the rear end a barrel flange, and at the forward end a transverse wall, a needle holding tip extending outwardly from said wall, said wall and tip having therethrough a tip bore; a tip shield on said tip, a bore pin extending from said tip shield substantially through said bore, and removable with the tip shield, to protect the sterility of the tip; a resilient piston in said barrel and located towards the center of said barrel, dividing the barrel into a forward compartment, for a solid component, and a rear compartment, for a liquid component, and on said piston, at least one annular ring in sealing engagement with said barrel, said piston having therein an axial passage and a plunger retaining groove in said passage, and coaxial with said passage, and at the forward end thereof a resilient valve sleeve, concentrically spaced from the main portion of the piston; a plunger extending from the rear into said barrel, the forward end of the plunger having thereon a boss extending into the axial passage in said piston, and having on said boss a cooperating enlargement entering into and cooperating with the groove in the passage in said piston, thereby firmly retaining the piston on said plunger, the plunger boss having such size as to extend into and at least slightly expand the valve sleeve on the piston, and in said plunger a liquid conduit extending from the portion of the plunger behind the piston in the rear compartment to the boss portion of the plunger inside of the resilient valve sleeve, and on the rear of the plunger and exterior of the barrel, a thumb piece;

a plunger sealing stopper cooperating with the rear of the barrel and the plunger to form a liquid-tight seal therebetween; a stopper retainer, to hold said sealing stopper in position; said plunger also having therein a vacuum breaking vent to introduce air into the rear compartment as the plunger moves forward of its storage position.

4. A combination aspirating hypodermic syringe and two-compartment package comprising: a generally cylindrical barrel, having at the rear end a barrel flange, and at the forward end a transverse wall, a needle holding tip extending outwardly from said wall, said wall and tip having therethrough a tip bore; means to protect the sterility of the tip during storage; a resilient piston in said barrel and located towards the center of said barrel, dividing the barrel into a forward compartment, for a solid component, and a rear compartment for a liquid component, and on said piston, at least one annular ring in sealing engagement with said barrel, said piston having therein an axial passage and a plunger retaining groove in said passage, and coaxial with said passage, and at the forward end thereof a resilient valve sleeve, concentrically spaced from the main portion of the piston; a plunger extending from the rear into said barrel, the forward end of the plunger having thereon a boss extending into the axial passage in said piston, and having on said boss a cooperating enlargement entering into and cooperating with the groove in the passage in said piston, thereby firmly retaining the piston on said plunger, the plunger boss having such size as to extend into and at least slightly expand the valve sleeve on the piston, and in said plunger a liquid conduit extending from the portion of the plunger behind the piston in the rear compartment to the boss portion of the plunger inside of the resilient valve sleeve, and on the rear of the plunger and exterior of the barrel a thumb piece;

a plunger sealing stopper cooperating with the rear of the barrel and the plunger to form a liquid-tight seal therebetween; means to hold said sealing stopper in position; and means to introduce air into the rear compartment as the plunger moves forward of its storage position.

5. A combination aspirating hypodermic syringe and two-compartment package comprising: a generally cylindrical barrel, having at the rear end a barrel flange, and at the forward end a transverse wall, a needle holding tip extending outwardly from said wall, said wall and tip having therethrough a tip bore; means to protect the sterility of the tip during storage; a resilient piston in said barrel and located towards the center of said barrel,

dividing the barrel into a forward compartment, for a solid component, and a rear compartment for a liquid component, and on said piston, at least one annular ring in sealing engagement with said barrel, said piston having therein an axial passage and coaxial with said passage, and at the forward end thereof a resilient valve sleeve, concentrically spaced from the main portion of the piston; a plunger extending from the rear into said barrel, the forward end of the plunger having thereon a boss extending into the axial passage in said piston, means to fixedly attach the plunger to said piston, the plunger boss having such size as to extend into and at least slightly expand the valve sleeve on the piston, and in said plunger a liquid conduit extending from the portion of the plunger behind the piston in the rear compartment to the boss portion of the plunger inside of the resilient valve sleeve, and on the rear of the plunger and exterior of the barrel a thumb piece; a plunger sealing stopper cooperating with the rear of the barrel and the plunger to form a liquid-tight seal therebetween; means to hold said sealing stopper in position; and means to introduce air into the rear compartment as the plunger moves forward of its storage position.

6. A combination aspirating hypodermic syringe and two-compartment package comprising: a generally cylindrical barrel, having at the forward end a transverse wall, a needle holding tip extending outwardly from said wall, said wall and tip having therethrough a tip bore; means to protect the sterility of the tip during storage; a resilient piston in said barrel and located towards the center of said barrel, dividing the barrel into a forward compartment, for a solid component, and a rear compartment for a liquid component, and on said piston, at least one annular ring in sealing engagement with said barrel, said piston having therein an axial passage and coaxial with said passage, and at the forward end thereof a resilient valve sleeve; a plunger extending from the rear into said barrel, the forward end of the plunger having thereon a boss extending into the axial passage in said piston, means to fixedly attach the plunger to said piston, the plunger boss having such size as to extend into and at least slightly expand the valve sleeve on the piston, and in said plunger a liquid conduit extending from the portion of the plunger behind the piston in the rear compartment to the boss portion of the plunger inside of the resilient valve sleeve, and on the rear of the plunger and exterior of the barrel a thumb piece; and means to retain liquid rearwardly of the piston.

7. In a hypodermic syringe and two-compartment package, having one compartment for a solid component, and a separate compartment for a liquid component, a combination one-way valve and piston assembly comprising a resilient one-piece piston having at least one annular ring for sealing engagement with the barrel of a hypodermic syringe to divide the barrel into said two compartments, said piston having therein an axial passage and an annular plunger retaining groove in said passage, and coaxial with said passage, and at the forward end thereof, a resilient valve sleeve concentrically spaced inwardly from the main portion of the piston, and approximately axially the same length as the main portion of the piston; and a separate plunger extending from the rear of the piston, the forward end of the plunger having thereon a boss extending into the axial passage in said piston, and having on said boss a cooperating enlargement entering into and cooperating with the groove in the passage in said piston, thereby firmly retaining the piston on said plunger, the plunger boss having such size as to extend into and at least slightly expand the valve sleeve on the piston, said plunger having a slot therein, which serves as a liquid conduit, extending from the portion of the plunger behind the piston to the boss portion of the plunger inside of the resilient valve sleeve, whereby liquid flows between the sleeve and the boss for one-way forward flow, but which sleeve contracts on the boss, preventing reverse flow.

References Cited by the Examiner

UNITED STATES PATENTS

583,374	Hines	May 25, 1897
1,499,508	Deane	July 1, 1924
2,578,394	Blackman	Dec. 11, 1951
2,677,374	Burnside	May 4, 1954
3,021,942	Hamilton	Feb. 20, 1962
3,052,239	Silver et al.	Sept. 4, 1962
3,076,456	Hunt	Feb. 5, 1963
3,107,785	Roehr	Oct. 22, 1963

FOREIGN PATENTS

1,213,761	France	Nov. 2, 1959

RICHARD A. GAUDET, *Primary Examiner.*

JORDAN FRANKLIN, *Examiner.*