April 24, 1934. C. F. RICHARD 1,956,474

WRAPPING MACHINE

Filed March 12, 1930 3 Sheets-Sheet 1

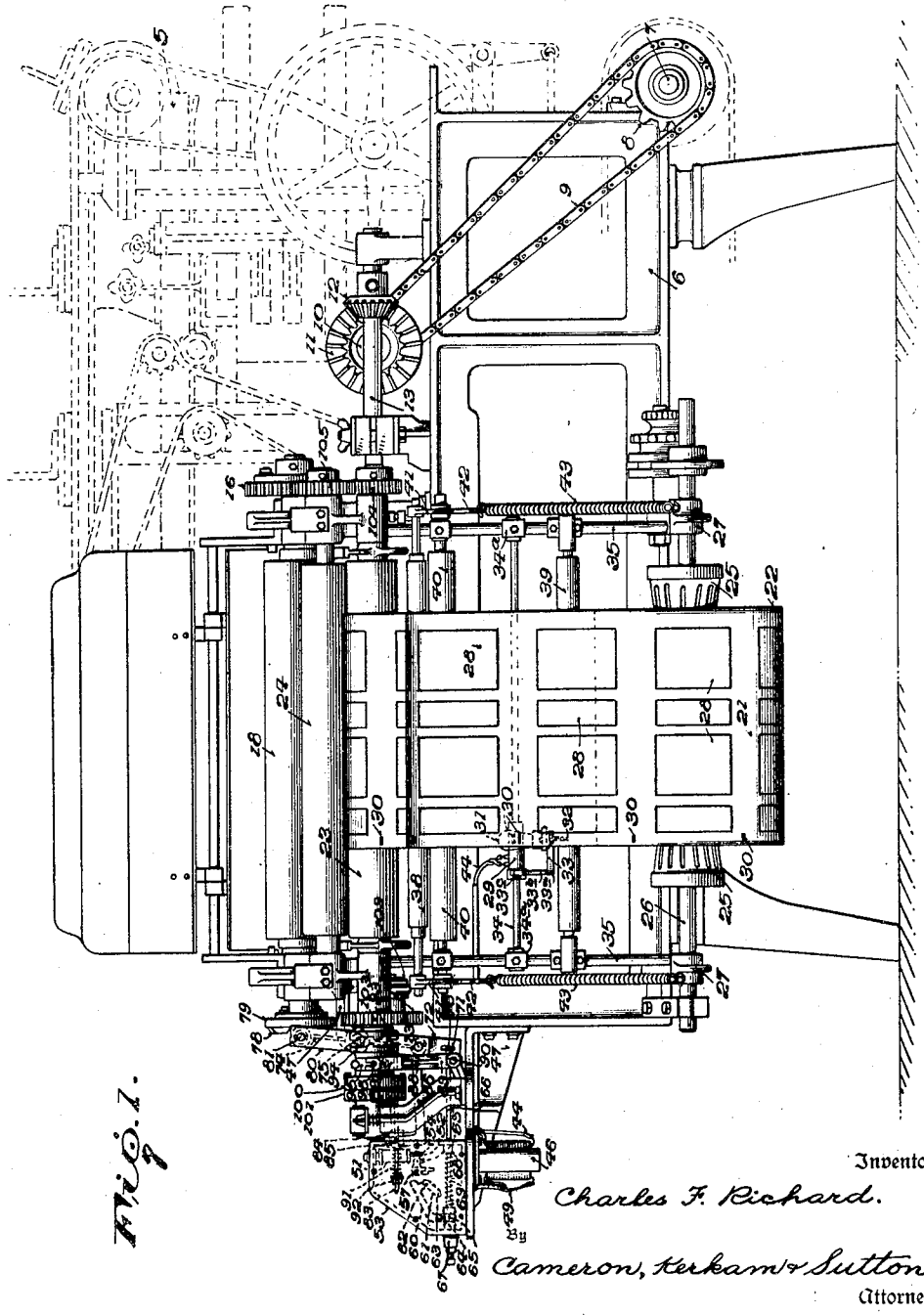

Fig. 1.

Inventor

Charles F. Richard.

By

Cameron, Kerkam & Sutton.

Attorneys

April 24, 1934. C. F. RICHARD 1,956,474

WRAPPING MACHINE

Filed March 12, 1930 3 Sheets-Sheet 2

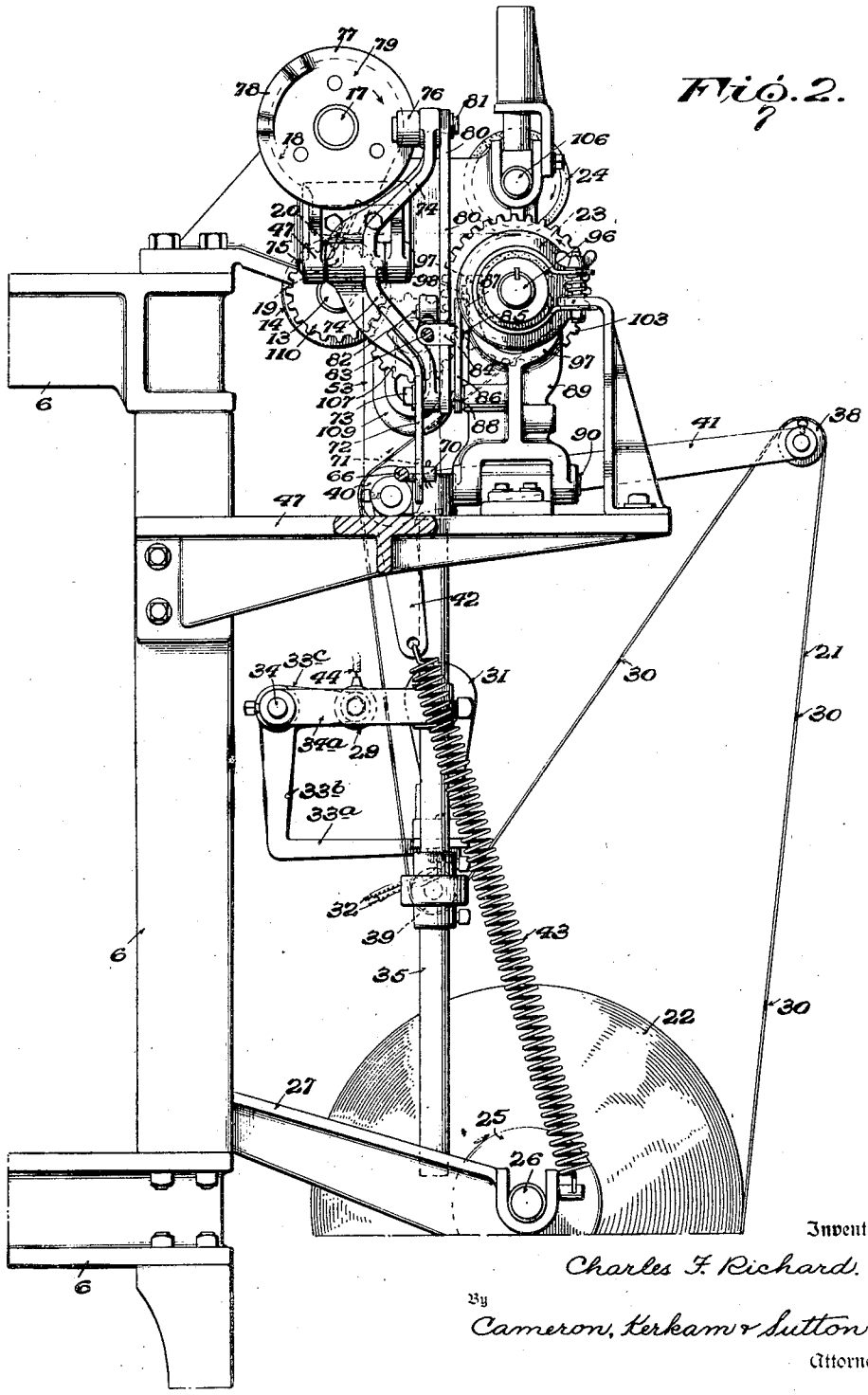

Inventor

Charles F. Richard.

By

Cameron, Kerkam & Sutton

Attorneys

April 24, 1934. C. F. RICHARD 1,956,474

WRAPPING MACHINE

Filed March 12, 1930 3 Sheets-Sheet 3

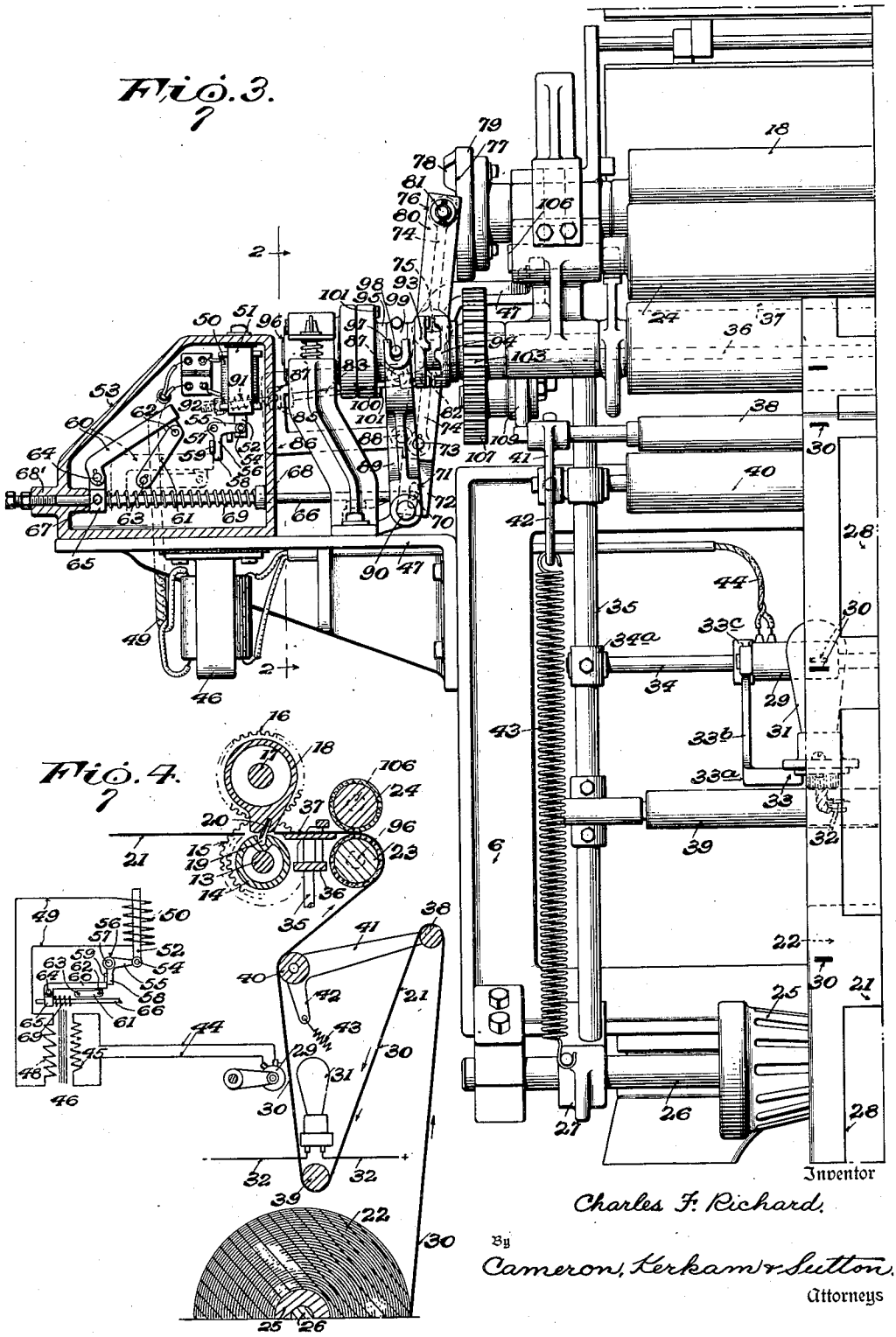

Inventor

Charles F. Richard,

By

Cameron, Kerkam & Sutton,

Attorneys

Patented Apr. 24, 1934 1,956,474

UNITED STATES PATENT OFFICE

1,956,474

WRAPPING MACHINE

Charles F. Richard, Battle Creek, Mich., assignor to Johnson Automatic Sealer Co., Ltd., Battle Creek, Mich., a partnership association, limited, of Michigan

Application March 12, 1930, Serial No. 435,332

13 Claims. (Cl. 164—61)

This invention relates to wrapping machines, and more particularly to mechanism for controlling the feeding of wrapping material from which printed wrappers are cut and thereafter wrapped around articles or packages in said machine.

One object of this invention is to provide improved mechanism which controls the feeding of wrapping material and cutting of the same into wrappers that may be properly presented and registered with the articles or packages.

Another object of this invention is to provide mechanism which utilizes the phenomena of the photo-electric cell to control the feeding and cutting of wrappers so that printed matter or designs thereon will always be properly presented or registered with respect to the articles or packages.

Another object of this invention is to provide mechanism controlled by a photo-electric cell in such manner that cutting of the wrapping material is always effected properly with respect to printed matter or designs on the individual wrappers.

Another object of this invention is to provide wrapper feeding mechanism which insures accurate cutting and registry of printed wrappers through the provision of spaced light impervious or darkened spots thereon that pass between a light and a photo-electric cell for controlling the feeding and cutting of the wrappers.

These and other objects of this invention will appear from the following description thereof, and in order to more clearly understand said invention, reference may be had to the accompanying drawings which illustrate one embodiment of the inventive idea.

In said drawings:

Fig. 1 is a side elevation of a package wrapping machine equipped with mechanism embodying the present invention;

Fig. 2 is an enlarged fragmentary end view, partly in section, looking from the left of Fig. 1;

Fig. 3 is an enlarged fragmentary side elevation, partly in section, of the paper feeding, cutting, and control mechanisms shown in Figs. 1 and 2; and

Fig. 4 is a sectional and diagrammatic detail view of said paper feeding, cutting, and control mechanisms.

Referring to the drawings wherein like reference characters designate like parts throughout the several views, 5 indicates article or package feeding and wrapping mechanism of any usual or well known construction. This mechanism, shown in dotted lines in Fig. 1, forms no part of the present invention, and it is therefore unnecessary to describe the same in detail. The article or package feeding and wrapping mechanism, and the paper cutting, feeding, and control mechanisms hereinafter referred to, are mounted on a frame 6 of suitable design and construction to support the aforesaid mechanisms.

Journaled on the frame 6 is a shaft 7 driven from any suitable source of power and associated through connections (not shown) with the article or package feeding and wrapping mechanism to operate the same. Fixed on the shaft 7, is a sprocket 8 around which passes a chain 9 that also passes around a sprocket (not shown) on a shaft 10 (Fig. 1). The shaft 10 is journaled on the top of the frame 6, and carries a bevel gear 11 which meshes with a bevel pinion 12. This bevel pinion 12 is fixed on a shaft 13 journaled on the frame 6 and extending longitudinally of said frame at the top and near side thereof as viewed in Fig. 1.

Fixed on the shaft 13 is a lower cutter roll 14 (Fig. 4) and a gear 15, said gear meshing with a gear 16 that is fixed on the shaft 17 of an upper cutter roll 18. The two cutter roll shafts are journaled on the top of frame 6 and said cutter rolls are driven continuously through the described connections therefor with the shaft 7. The lower cutter roll 14 is provided longitudinally thereof with a groove 19 which, at each operation of the cutter mechanism, receives a knife 20 that extends longitudinally of the upper cutter roll 18 and is secured thereto in any suitable manner. The two cutter rolls 14 and 18 are rotated in opposite directions to cut off wrappers from a printed web 21 that is fed intermittently from a roll 22 by lower and upper feed rolls 23 and 24, respectively. The roll 22 of material from which the wrapper web 21 is fed, is rotatably supported by cores 25 (Fig. 1) on a shaft 26 carried by brackets 27 secured to and projecting outwardly from the near side of the frame 6 (Figs. 1, 2 and 3).

The web 21 has printed thereon at intervals along the same, advertising matter, designs, or the like, indicated generally at 28 (Fig. 1) and adapted to register with the sides or panels of articles or packages when wrappers cut from said web are associated with said articles or packages and wrapped therearound. It has been found, in wrapping articles or packages with wrappers of this type, that the printed matter or designs thereon will not always register with the sides or panels of the articles or packages, and that this is due to faulty feeding and cutting of

the wrappers from the printed web. In accordance with the present invention, this difficulty is overcome by controlling the feeding of the web and cutting of the wrappers therefrom through the medium of a photo-electric cell 29, light impervious or darkened spots 30 provided at intervals along the web 21, and a lamp 31 between which and the cell 29, the web 21 and spots 30 pass as the web is fed by the feeding rolls 23, 24 between the cutter rolls 14, 18.

The light impervious or darkened spots 30 may be printed or otherwise suitably applied to the web at intervals along the same, and as herein shown, said spots are printed on one edge of the web at points where the web is severed transversely thereof into wrappers so that the printed matter or designs thereon will always register perfectly with the sides or panels of the articles or packages when said wrappers are associated with and folded around said articles or packages. The lamp 31 may be of any suitable type connected by lead lines 32 with a suitable source of electric current. The lamp 31 is mounted on the inwardly bent end 33 of an arm 33*a* that forms part of a bracket 33*b* (Figs. 2 and 3). The arm 33*a* thus supports the lamp at one side of the web 21 so that the spots 30 thereon travel past said lamp as the web is fed by the rolls 23, 24. The photo-electric cell 29 is supported on an arm 33*c* of the bracket 33*b*, at the opposite side of the web 21, and in alignment with the lamp 31. The bracket 33*b* is mounted on a cross bar 34 for adjustment to various positions along the same, so that the cell, the lamp, and the hereinafter described mechanism controlled thereby, may operate in conjunction with webs of various widths. The cross bar 34 is mounted on arms 34*a* which, in turn, are mounted on, and movable vertically to various positions of adjustment along, a pair of frame members 35. The cell 29 and the lamp 31 may thus be adjusted vertically, as well as laterally, with respect to the web 21.

The lower ends of the frame members 35 are received in suitable sockets formed in the brackets 27 that support the roll 22 of wrapping material. The brackets 27 thus support the frame members 35, and the upper ends of said frame members are secured to a cross member 36 (Figs. 3 and 4) of the frame 6. This cross member 36 carries a plate or table 37 over which the web 21 of paper is fed by the feed rolls 23, 24 to the cutter rolls 14, 18. The web 21 passes upwardly from the roll 22 over a tension roll 38 then downwardly under a roll 39, then upwardly between the cell 29 and the lamp 31, over a roll 40 and between the rolls 23, 24 which feed said web between and past the cutter rolls 14, 18, as aforesaid. The rolls 39 and 40 extend transversely of the frame members 35 and are mounted thereon in any suitable manner. The shaft for the roll 40 has mounted thereon a pair of bell cranks in the arms 41 of which the tension roll 38 is journaled. The other arms 42 of said bell cranks are connected with corresponding ends of springs 43 the opposite ends of which are secured to the outer extremities of the brackets 27. Said springs thus tend to lift the tension roll 38 and maintain proper tension on the web 21.

The photo-electric cell 29 is connected in the usual or any well known manner with a source of electric current, and has lead lines 44 to the primary winding 45 of a transformer 46. This transformer is mounted in any suitable manner as by securing the same to a bracket 47 which, in turn, is secured to the frame 6 and projects outwardly from one end thereof as clearly shown in Figs. 1 and 2 of the drawings. The secondary winding 48 of the transformer 46 is connected by lead lines 49 with the winding 50 of an electromagnet 51 the core of which is indicated at 52. The electromagnet 51 is mounted in any suitable manner on the inner wall of a housing 53 carried by the bracket 47.

Pivotally connected, as at 54, with the core 52 of the electromagnet 51, is one arm 55 of a detent 56 that is pivoted at 57 on the inner wall of the housing 53. The other arm 58 of said detent is provided with a lug 59 that cooperates with said arm to hold a latch 60 and a link 61 in the dotted line positions thereof shown in Fig. 3 when the rolls 23, 24 are feeding the web past the cutter rolls 14, 18. One end of the link 61 is pivotally connected, as at 62, with the free end of the latch 60, and the opposite end of said link has a fixed pivot at 63 on the inner wall of the housing 53. The latch 60 is pivotally mounted, as at 64, on a collar 65 which is mounted on a link 66 and secured thereto by a pin or cotter key 67. This link 66 is slidably mounted in bearings 68 and 68′ formed in the housing 53, said link projecting through the bearing 68 and one side of the housing 53, for connection with clutch operating mechanism to be presently described.

Mounted on the link 66 between the bearing 68 and the collar 65, is a coil spring 69 that normally tends to pull the link 66 toward the left as viewed in Fig. 3 of the drawings. The link 66 has a pin and slot connection 70, 71 with a plate 72 which is secured at 73 to the lower end of a lever 74. This lever 74 is pivoted at 75 on the bracket 47′, and the upper end of the plate 72 bears against said lever between the pivot 75 thereof and the point 73 at which said plate is secured to the lever.

Journaled on the upper end of the lever 74 is a roller 76 that is successively engaged by the low and high portions 77 and 78, respectively, of a continuously rotating cam 79. This cam 79 is fixed on the upper cutter roll shaft 17 and acts, in conjunction with the spring 69, to rock the lever 74 about its pivot 75. The lever 74 is preferably made in the form of a yoke across which extends a plate 80 that has its opposite ends connected with said lever at 73 and 81, respectively. This plate 80 has pivotally connected therewith, as at 82, one end of a link 83, the pivot 82 being disposed below the pivot 75, as clearly shown in Fig. 3 of the drawings. The opposite end of the link 83 extends loosely through a collar 84 that is pivoted at 85 on a yoke 86. The yoke 86 is rigidly secured at 87, 88 on a clutch operating lever 89 that is pivotally mounted at 90 on the bracket 47.

Mounted on the free end of the link 83 is a spring 91 one extremity of which bears against an adjusting nut 92 threaded on said end of the link. The opposite extremity of the spring 91 bears against the collar 84, and said spring serves to yieldably urge the teeth of the parts 93, 94 of a clutch into engagement to drive the feed rolls 23, 24 as hereinafter described. The clutch part 93 is formed on a sleeve 95 that is mounted on and slidable along the shaft 96 of roll 23 by the lever 89. For this purpose, said lever is provided on its upper end with a yoke 97 in the arms of which are engaged pins 98 that project from a collar 99 mounted in a groove of sleeve 95 and in which collar said sleeve is rotated. One end of the sleeve 95 is enlarged at 100 and

slotted to receive keys 101 which project from a plate 102 that is fixed on the shaft 96.

The clutch part 94 is secured to or formed integrally with a gear 103, and said gear and said clutch part are loosely mounted on the shaft 96 at one end thereof, so as to be prevented from moving longitudinally of said shaft but free to rotate idly thereon when the clutch parts 93, 94 are disengaged. Fixed on the shaft 96 at the end thereof opposite that carrying the gear 103 and the clutch part 94 is a gear 104. The gear 104 meshes with a gear 105 that is fixed on the shaft 106 of the upper feed roll 24. The shafts 96, 106 of the feed rolls 23, 24 are journaled in any suitable manner on the top of the frame 6 at the near side thereof as viewed in Fig. 1 of the drawings. The gear 103 meshes with an idler and timing gear 107 the spindle 108 of which is adjustably mounted in a slotted extension 109 of the bracket 47. The gear 107 meshes with a gear 110 which is fixed on the continuously driven shaft 13 that carries the lower cutter roll 14. It will appear from the foregoing, that when the clutch parts 93, 94 are engaged, the feed rolls 23, 24 will be driven from the shaft 13 of the lower cutter roll 14 to thereby feed the paper between said cutter roll and the cutter roll 18 so that the latter in its rotation cuts the wrappers from the web 21.

Engagement of the clutch parts 93, 94, as aforesaid, is effected by the high part 78 of the cam 79 striking the roller 76 and swinging the lever 74 counterclockwise, as viewed in Fig. 3, about its pivot 75. The link 83 is thus pulled to the right, and through the described connections therefor with the arm 89, swings the latter in the same direction about its pivot 90 and engages the clutch parts 93, 94 to drive the feed rollers 23, 24. At the same time, the link 66 is pulled to the right, thereby lowering the latch 60 and the link 61 to their dotted line positions shown in Fig. 3 where they are held by the detent 56 until one of the spots 30 on the web 21 arrives at a position between the photo-electric cell 29 and the lamp 31.

When said spot is positioned between said cell and the lamp, there is a variation produced in the current flowing through the circuit comprised by the photo-electric cell 29, the leads 44, and the primary winding 45 of the transformer 46. Current is thus induced in the circuit comprised by the winding 50 of the electromagnet 51, the leads 49, and the secondary winding 48 of the transformer 46, this induced current acting to lift the core 52 of the electromagnet 51 and release the detent 56 so that the arm 58 and the lug 59 thereof are disengaged from the latch 60. The spring 69, which was compressed when the clutch parts 93, 94 were engaged as aforesaid, then acts through the link 66 to swing the lever 74 in a clockwise direction (Fig. 3) about its pivot 75 so that the link 83, through the yoke 86, swings the lever 89 to the left, disengages the clutch parts 93, 94, and stops rotation of the feed rolls 23, 24 at the instant a line extending transversely between the first two wrappers of the web 21 arrives in the vertical plane of the axes of the cutter rolls 14, 18. The last named rolls then act to cut off the leading wrapper of the web accurately between said wrapper and the next succeeding wrapper of the web, so that when the cut wrapper is associated with an article or package, the printed matter or designs on the wrapper will register perfectly with the sides or panels of said article or package.

The cam 79, in its continued rotation, again brings the raised portion 78 into engagement with the roller 76, whereupon the lever 74 is swung to engage the clutch parts 93, 94 so that the rolls 23, 24 are rotated to feed the web 21 past the cutter rolls 14, 18, as before described. The spot 30 on web 21 which had previously advanced to a position between the cell 29 and the lamp 31, now advances upwardly with the web 21 so that no current flows in the circuit including the electromagnet 51 and the secondary winding 48 of the transformer 46. The latch 60 and the link 61 are therefore held down in their dotted line positions (Fig. 3) by the detent 56, so that engagement of the clutch parts 93, 94 is maintained to continue feeding of the web 21 until another spot 30 thereon arrives at a position between the cell 29 and the lamp 31. When the last named spot 30 is so positioned between the cell 29 and the lamp 31, current is again induced in the circuit including the electromagnet winding 50, the leads 49 and the secondary winding 48 of transformer 46, and the core 52 of the electromagnet 51 is again lifted to disengage the detent 56 from the latch 60. The spring 69 then acts, as before described, to move said latch and the clutch operating mechanism to the full line positions thereof shown in Fig. 3, thereby disengaging the clutch parts 93, 94 and stopping the rotation of the feed rolls 23, 24 at the instant a line extending transversely of the web between what is then the leading wrapper thereof, and the next succeeding wrapper, is positioned in the vertical plane of the axes of the cutter rolls 14, 18. The last named rolls then act to cut off said leading wrapper of the web so that the printed matter or designs thereon will register perfectly with the sides or panels of a package or article when associated therewith.

These operations are repeated to feed the web and cut off wrappers therefrom until the roll 22 of paper has been fed in its entirety to the machine, and cut into wrappers as described, whereupon a similar roll may be placed in the machine and a web thereof likewise fed and cut into wrappers. When the last named roll has been exhausted, another roll can be placed in the machine and so on until it is desired to stop the operation of the machine, or until a desired number of wrapped articles or packages have been produced thereby.

It will appear from the foregoing, that by the present invention, feeding of the wrapper web is effected in a manner to insure proper cutting of the wrappers from the web. Moreover, the present invention insures that the wrappers will always be cut between the designs thereof respectively, so that on the one hand, cutting across the designs is prevented, and on the other hand, the printed matter or designs will register perfectly with the sides or panels of articles or packages when associated with and wrapped around the same. It will further appear, that by the present invention, there is produced an improved web and control mechanism by which said web may be cut into wrappers the printed matter or designs of which will be properly positioned on the sides or panels of articles or packages when said wrappers are associated with and folded therearound.

While one embodiment of the inventive idea is illustrated and described herein with more or less particularity, it is to be expressly understood that the invention is not limited to said embodi-

ment or otherwise than by the terms of the appended claims.

What I claim is:

1. The combination, in a wrapping machine of the type utilizing a rolled web of paper comprising a series of wrapper units and having a series of spaced light impervious or darkened spots applied on the web along one edge thereof, of a supporting spindle for said roll of paper, a pair of coacting rolls for feeding the web, driving means for said rolls including a clutch, a pair of coacting rotary cutter members disposed at one side of and in spaced relation with the web feeding rolls and between which the web is fed by the latter, means adapted to throw the clutch in engagement and including a driven cam operatively associated with one of said cutter members, a detent for holding said clutch in engaged position, a spring acting to throw said clutch out of engagement when said detent is released, an electromagnet operatively associated with said detent, an electric lamp arranged at one side of the web and past which the latter and the light impervious or darkened spots thereon are adapted to travel, a photo-electric cell arranged at the opposite side of said web and in alignment with said lamp, and a transformer having its primary winding electrically connected with said cell and its secondary winding electrically connected with the winding of said electromagnet.

2. The combination, in a wrapping machine of the type utilizing a rolled web of paper comprising a series of wrapper units and having a series of spaced light impervious or darkened spots applied on the web longitudinally thereof, of a pair of coacting rolls for feeding the web, driving means for said rolls including a clutch, a pair of continuously driven cutter members arranged at one side of and in spaced relation with the web feeding rolls and between which the web is fed by the latter, clutch control means including a cam driven by one of said cutter members and adapted to throw the clutch into engagement and a detent for holding said clutch in engaged position, a spring acting to throw said clutch out of engagement when said detent is released, an electromagnet operatively associated with said detent, a source of light arranged at one side of the web and past which the latter and the light impervious or darkened spots thereon are adapted to travel, a transformer having its secondary winding electrically connected with the coil of said electromagnet, and a photoelectric cell electrically connected with the primary winding of said transformer and arranged in alignment with the source of light so that the web and the light impervious or darkened spots thereon may be fed between said cell and said source of light.

3. The combination, in a wrapping machine of the type utilizing a web of paper comprising a series of wrapper units and having a series of light impervous or darkened spots applied to the web along one edge thereof, of a pair of coacting web feeding rolls, driving means for said rolls including a clutch, continuously rotating cutter means operatively associated in driving relation with said web feeding rolls and past which the web is fed by the latter, clutch control means including a driven cam for throwing the clutch into engagement and a detent for holding said clutch engaged, a spring adapted to throw said clutch out of engagement when said detent is released, an electromagnet for releasing said detent, and means for passing electric current through the winding of said electromagnet comprising a source of light and a photo-electric cell between which the web and light impervious or darkened spots thereon pass and a transformer the primary and secondary windings of which are electrically connected with said photo-electric cell and the coil of said electromagnet respectively.

4. The combination, in a wrapping machine of the type utilizing a web of paper comprising a series of wrapper units and having a series of light impervious or darkened spots applied to the web in spaced relation longitudinally thereof, of a pair of web feeding rolls, driving means for said rolls including a clutch, continuously rotating cutter means operatively associated with said web feeding rolls and past which the web is fed by the latter, means driven by said cutter means for throwing the clutch into engagement to operate the web feeding means, a detent for holding said clutch in engaged position, an electromagnet for releasing said detent so that the clutch may be thrown out of engagement to stop the operation of the web feeding means, a source of light past which the web and the light impervious or darkened spots thereon are adapted to travel, a transformer, an electrical circuit including the secondary winding of the transformer and the coil of the electromagnet, and a second electrical circuit including the primary winding of said transformer and a photo-electric cell between which and said source of light the web and the light impervious or darkened spots thereon may pass.

5. The combination, in a wrapping machine of the type utilizing a web of paper comprising a series of wrapping units and having a series of light impervious or darkened spots applied to the web longitudinally thereof in association with the wrapping units, of intermittently operating web feeding means including a clutch, continuously rotating cutter means operatively associated with said web feeding means and past which the web is fed by the latter, means driven by said cutter means for throwing the clutch into engagement so that the web is fed past the cutter means by the web feeding means, a detent for holding the clutch in engaged position, and electrical means for releasing said detent including a photo-electric cell and a source of light between which the web and the light impervious or darkened spots thereon may pass.

6. The combination, in a wrapping machine, of means for feeding wrappers thereto from a web of paper having a series of light impervious or darkened spots applied thereto at spaced points along the same, means for driving said feeding means and including a clutch, a continuously rotating member operatively associated in driving relation with the feeding means and past which the web is fed by the latter, control means for said clutch including mechanism actuated by said cutter member for automatically throwing the same into engagement to drive the feeding means and a detent for holding said clutch in engaged position, an electromagnet for releasing said detent to disengage the clutch and stop the operation of the feeding means, and means for passing current through the coil of the electromagnet to release the detent and including a photo-electric cell and a source of light between which the web and the light impervious or darkened spots thereon may pass.

7. The combination, in a wrapping machine, of

means for feeding wrappers thereto from a web of paper provided longitudinally thereof with a series of spaced light impervious or darkened spots, means for intermittently driving the web feeding means and including a clutch, continuously rotating wrapper cutting means operatively associated in driving relation with the web feeding means and past which said web may be fed by the latter, control means for said clutch including mechanism for automatically throwing the clutch into engagement and a detent for holding the clutch in engaged position, a photo-electric cell and a source of light between which the web and the light impervious or darkened spots thereon may pass, and means for releasing the detent to throw the clutch out of engagement and stop feeding of the web comprising an electromagnet adapted to be electrically connected with said photo-electric cell.

8. In combination, means for feeding a web of paper provided longitudinally thereof with spaced light impervious or darkened spots, continuously rotating web cutting means past which the web is fed by the web feeding means, driving means for the web feeding means and including a clutch, means actuated by said cutting means for throwing the clutch in engagement to drive the web feeding means and feed the web past the web cutting means, a source of light past which the web and the light impervious or darkened spots thereon may move, electrically controlled means for releasing the clutch to disengage the same and stop the operation of the web feeding means, and means controlling the operation of said electrically controlled means and including an electrical light controlled device between which and the source of light the web and said spots may move.

9. In combination, in a wrapping machine of the type utilizing a web of paper having printed matter at intervals therealong to form wrappers, intermittently operative means for feeding said web, continuously rotating cutter means past which said web is fed by said web feeding means, and light sensitive means for controlling the operation of said web feeding means so that the same is made intermittently effective to present said web to said cutter means in proper position for the cutting of said wrappers.

10. In combination, in a wrapping machine of the type utilizing a web of paper having printed matter at intervals therealong to form wrappers, intermittently operative means for feeding said web, continuously rotating cutter means past which said web is fed by said web feeding means, light sensitive means for controlling the operation of said web feeding means so that the same is made intermittently effective to present said web to said cutter means in proper position for the cutting of said wrappers, and means on said web for varying the amount of light received by said light sensitive means.

11. The combination, in a wrapping machine of the type utilizing a web of paper, of continuously rotating cutter means for cutting said web into wrappers, means for intermittently feeding said web past said cutter means, and light sensitive means for controlling the intermittent operation of said feeding means.

12. The combination, in a wrapping machine of the type utilizing a web of paper, of continuously rotating cutter rolls for cutting said web into wrappers, means for intermittently feeding said web between said cutter rolls, and photo-electric cell means for controlling the intermittent operation of said feeding means.

13. The combination, in a wrapping machine of the type utilizing a web of paper, of continuously rotating cutter rolls for cutting said web into wrappers, means for intermittently feeding said web between said cutter rolls, means for controlling the intermittent operation of said feeding means including an electric device the resistance of which is responsive to variations in the amount of light received thereby, and means on said web movable past said electrical device and adapted to vary the amount of light received thereby.

CHARLES F. RICHARD.