US00D328291S

United States Patent [19]

Falkner

[11] Patent Number: Des. 328,291

[45] Date of Patent: ** Jul. 28, 1992

[54] DISPLAY ENCLOSURE

[75] Inventor: Maria J. Falkner, Arlington, Mass.

[73] Assignee: Digital Equipment Corporation, Maynard, Mass.

[**] Term: 14 Years

[21] Appl. No.: 467,211

[22] Filed: Jan. 19, 1990

[52] U.S. Cl. D14/113; D14/100

[58] Field of Search D14/100, 101, 105, 106, D14/107, 113, 114, 115, 124–126; D18/1, 4, 7, 11, 12; 340/700, 706, 711, 712; 341/22, 23, 26; 358/248, 249, 252–255, 64; 364/706–710.14; 312/208; 313/422; 315/85, 366

[56] References Cited

U.S. PATENT DOCUMENTS

D. 239,392	3/1976	Baughman	D14/100
D. 270,727	9/1983	Gonzales	D14/100
D. 293,241	12/1987	Wan et al.	D14/100
D. 303,374	9/1989	Larson et al.	D14/100
D. 306,720	3/1990	Flies	D14/113
D. 315,549	3/1991	Clough et al.	D14/100

FOREIGN PATENT DOCUMENTS

0091642	5/1984	Japan	313/422

Primary Examiner—Wallace R. Burke
Assistant Examiner—Freda S. Nunn
Attorney, Agent, or Firm—Kenyon & Kenyon

[57] CLAIM

The ornamental design for a display enclosure, as shown and described.

DESCRIPTION

FIG. 1 is a top perspective view of a display enclosure showing my new design;
FIG. 2 is a bottom perspective view thereof;
FIG. 3 is a top plan view thereof;
FIG. 4 is a front elevational view thereof;
FIG. 5 is a left side elevational view thereof;
FIG. 6 is a right side elevational view thereof;
FIG. 7 is a rear elevational view thereof; and,
FIG. 8 is a bottom plan view thereof.
The display enclosure is shown on a reduced scale in FIGS. 3–8.

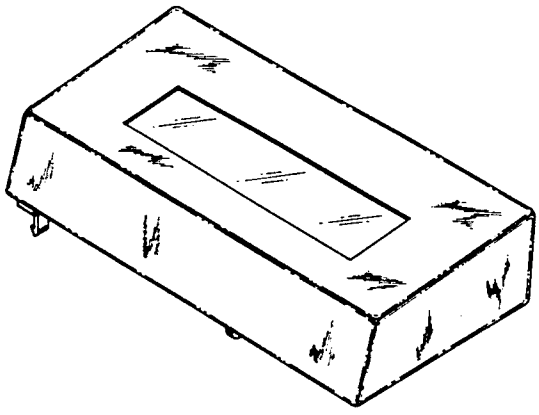

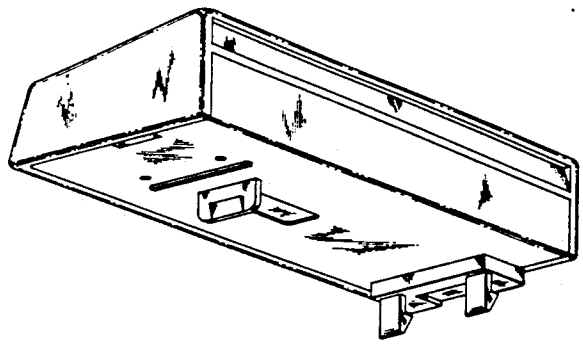

FIG. 1

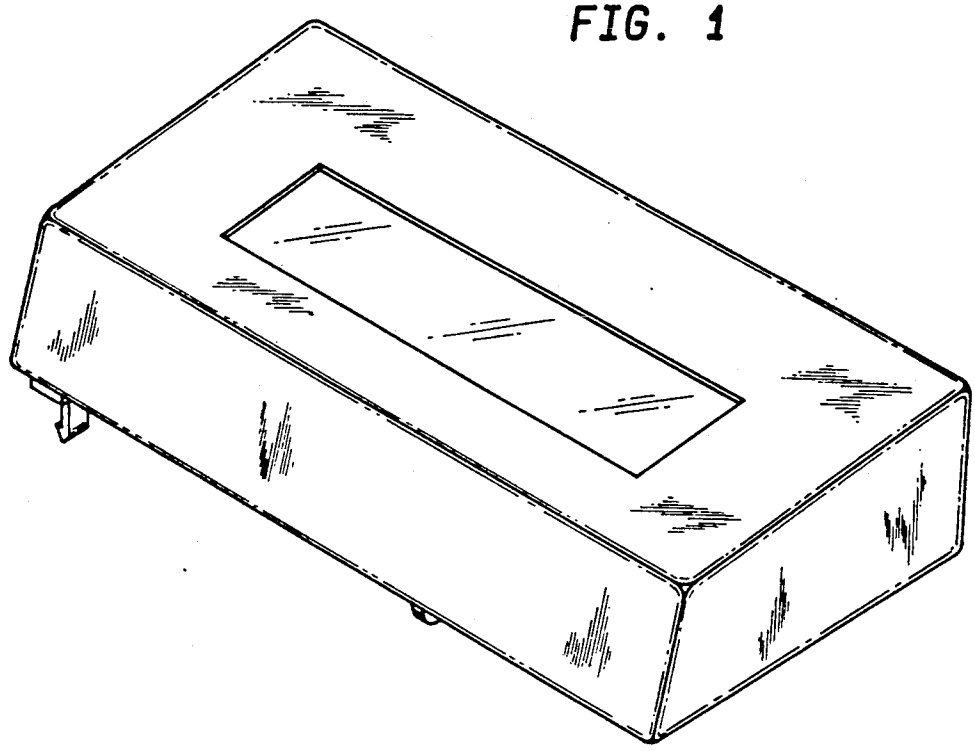

FIG. 2

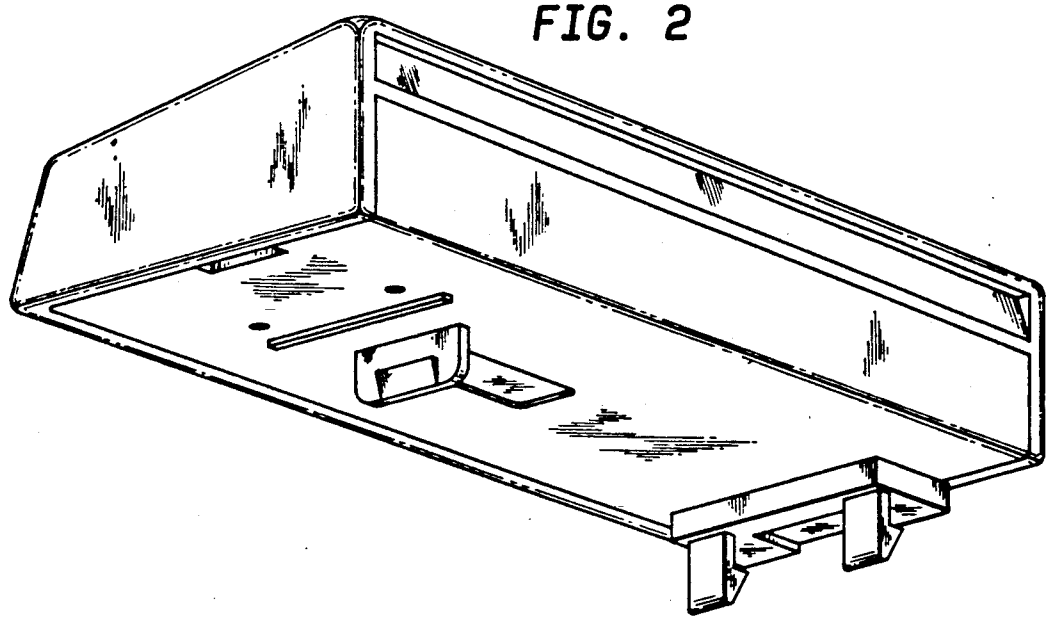

FIG. 3

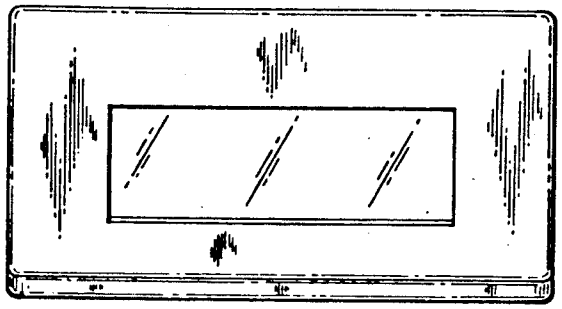

FIG. 4

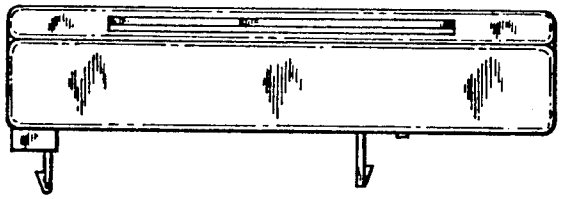

FIG. 7

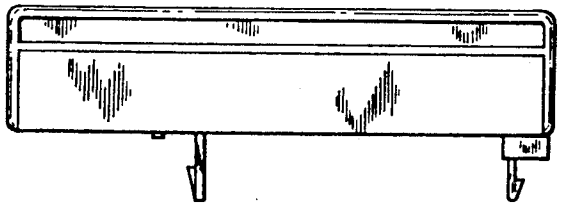

FIG. 5

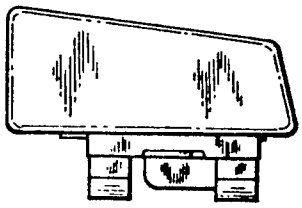

FIG. 6

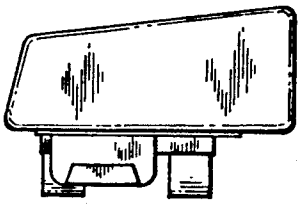

FIG. 8

