(No Model.)

S. T. BRYCE.

FURNACE OR STOVE.

No. 590,450. Patented Sept. 21, 1897.

FIG. 1.

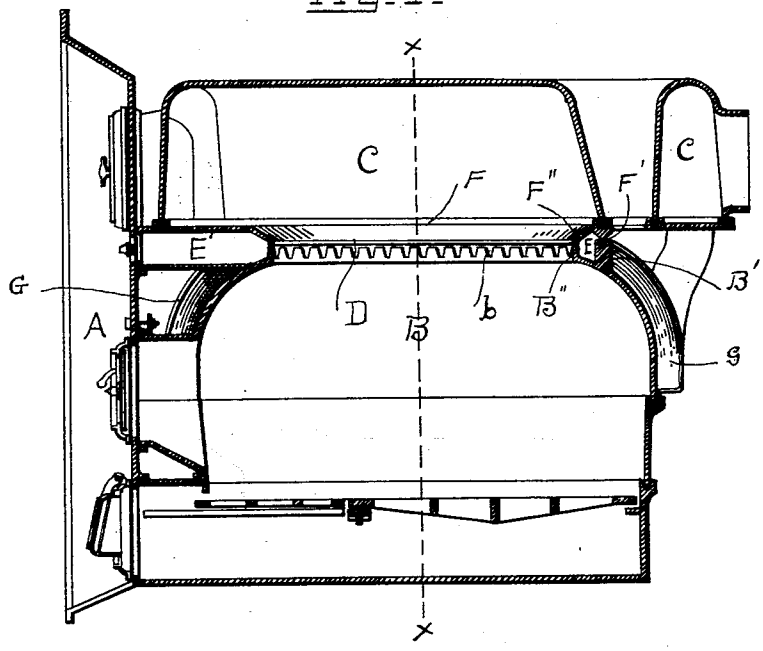

FIG. 2.

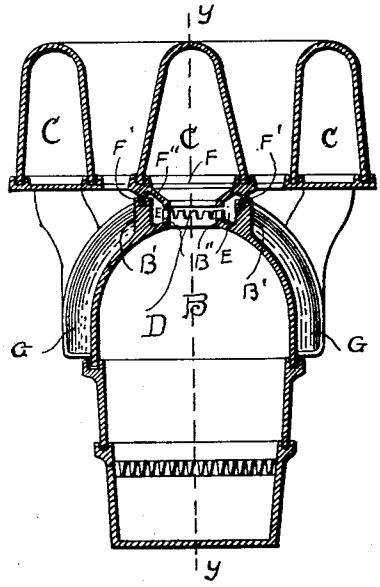

FIG. 3.

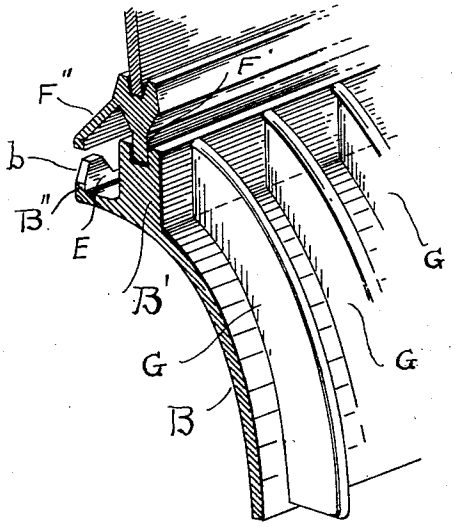

WITNESSES.

H. H. Martin
Maud Schumacher.

INVENTOR.

Stephen T. Bryce
By William Webster
Atty

THE NORRIS PETERS CO., PHOTO-LITHO., WASHINGTON, D. C.

UNITED STATES PATENT OFFICE.

STEPHEN T. BRYCE, OF TOLEDO, OHIO.

FURNACE OR STOVE.

SPECIFICATION forming part of Letters Patent No. 590,450, dated September 21, 1897.

Application filed March 21, 1896. Serial No. 584,350. (No model.)

To all whom it may concern:

Be it known that I, STEPHEN T. BRYCE, a citizen of the United States, residing at Toledo, in the county of Lucas and State of Ohio, have invented a new and useful Hot-Air Furnace, of which the following is a specification, reference being had to the accompanying drawings.

This invention has relation to furnaces and stoves for consuming the gaseous hydrocarbons of bituminous and other coal, which in the ordinary furnace is allowed to pass off through the chimney as smoke and soot, and has for its object to provide a heater of the class referred to that shall possess superior advantages over others in point of simplicity, durability, and general efficiency; and it consists in the construction and novel arrangement, as will be hereinafter described, and particularly pointed out in the claim.

In the drawings, Figure 1 is a vertical section on line *y y* in Fig. 2 through center of furnace, and Fig. 2 is a transverse section on line *x x* in Fig. 1. Fig. 3 is an isometric section on line *x x*, Fig. 1, showing more fully the ribs G.

Referring to the accompanying drawings, A designates the front or casing of the furnace or stove; B, the combustion-chamber; C, the radiator, and D the contracted opening connecting the combustion-chamber and the radiator, through which the products of combustion pass from the combustion-chamber into the radiator. Surrounding the opening D is a chamber E, which connects by a passage E′ with the front A of the furnace, controllable by a suitable damper. Chamber E is formed by providing upwardly-extending integral flanges B′ and B^2, projecting upwardly from the casing comprising the combustion-chamber, and the depending flanges F′ F^2, depending from a plate F, interposed between the combustion and radiator chambers. Flanges B′ and F′ are in vertical alinement and coincide to provide a tight joint at this point, the flanges F^2 and B^2 being in vertical alinement, but slightly apart, the flange B^2 being provided with a plurality of notches *b*, through which and the opening between the flanges F^2 and B^2 fresh oxygen from outside the furnace-chamber is conveyed, and, after being heated, is discharged into the opening D to become thoroughly mixed with the unconsumed gaseous hydrocarbons passing from the fire-pot. It will be seen that the upwardly-extending flange B′ is of great length. Therefore to support the same and to prevent warping, due to the heat to which it is exposed, I provide vertical ribs G, which act as a brace to hold the flange in position.

The size and form of the air-chamber E may be such as will best accommodate the style of heater selected and to provide for the proper distribution of the heated oxygen in such quantity and at such point or points as may be most desirable.

It will be seen that the air which enters the chamber E at its opening at A will necessarily become heated to a high temperature in its passage to where it enters the furnace at a point where the smoke and gases are in a concentrated condition and will insure their thorough mixing with the heated oxygen.

It will also be seen that the combustion-chamber B and the radiator C are considerably contracted where they connect at the opening D, in such manner as to force the products of combustion to be drawn to and concentrated at this point, where they cannot escape contact and mingling with the heated oxygen as they pass from the combustion-chamber to the radiator. The radiator-chamber C is made larger than the opening D in order to provide ample capacity for the necessary expansion caused by the combustion of the smoke and gases which have been ignited at that point by the introduction of heated oxygen admitted through the chamber E.

I am aware that it has been proposed to construct furnaces and stoves having annular chambers or pipes communicating with the fire-chamber for admitting fresh oxygen to aid combustion at or near the top of the fire-bowl or base of combustion-chamber at the point of their greatest expansion, all of which I disclaim.

Having thus fully described my invention, what I claim as new, and desire to secure by Letters Patent, is—

In a stove or furnace, a combustion-chamber, a radiator-chamber in communication therewith, an outer rib and an inner rib extending upwardly and downwardly from the

casing comprising the combustion-chamber and the radiator-chamber, respectively, said ribs when in communication forming an air-chamber surrounding the contracted opening between the radiator-chamber and the combustion-chamber, the outer ribs being in vertical alinement and in engagement with each other, the inner ribs being in vertical alinement and slightly apart, a passage communicating with the outside of the furnace and the air-chamber, and vertical ribs extending outwardly from the exterior of the shell of the combustion-chamber and extending from a point substantially centrally of the same and connected with the outer upwardly-extending rib which forms the air-space to act as a support for the rib.

In testimony whereof I have hereunto set my hand.

STEPHEN T. BRYCE.

Witnesses:
FRANK P. HULL,
MURRAY C. MOORE.