June 15, 1943. J. B. CARAWAY, JR 2,321,651

RADIO SIGNALING SYSTEM

Filed April 20, 1942

FIG. 1.

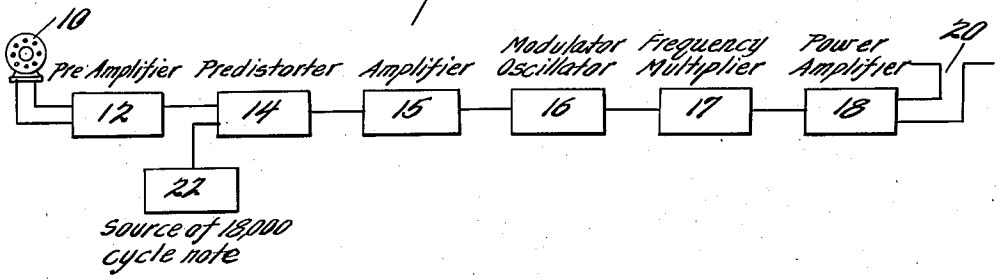

FIG. 2.

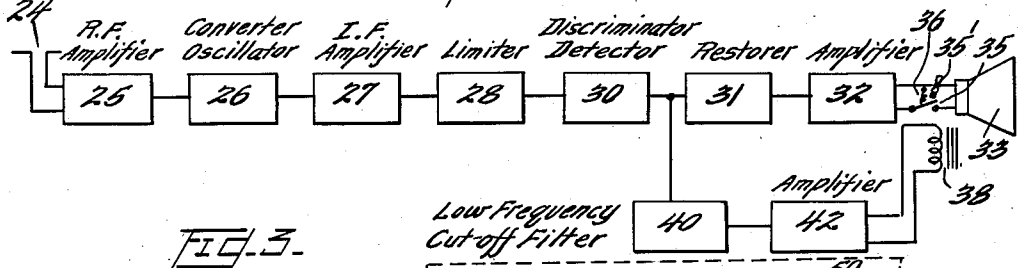

FIG. 3.

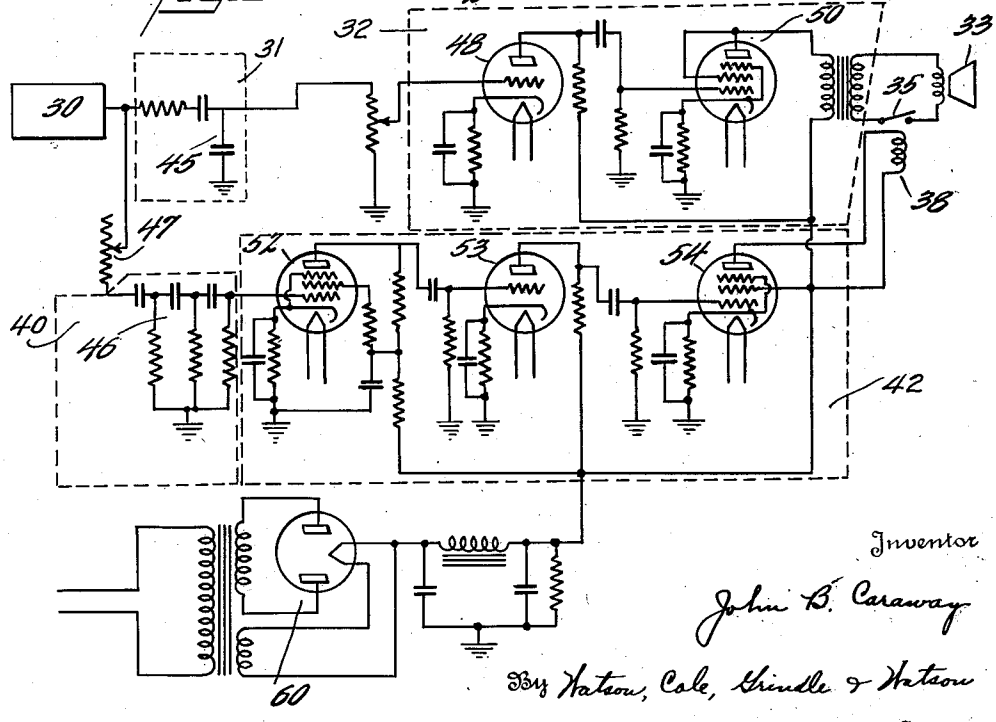

Inventor

John B. Caraway

By Watson, Cole, Grindle & Watson

Attorneys

Patented June 15, 1943

2,321,651

UNITED STATES PATENT OFFICE

2,321,651

RADIO SIGNALING SYSTEM

John B. Caraway, Jr., Newark, N. J., assignor to Evansville on the Air, Inc., Evansville, Ind., a corporation of Indiana

Application April 20, 1942, Serial No. 439,762

9 Claims. (Cl. 250—2)

This invention relates to radio signaling systems and more particularly to an "alert" or warning signal system arranged to function with a broadcast transmitter and receivers.

It is a general object of the present invention to provide a novel and improved warning or "alert" signal system adapted for use with a radio broadcasting station and receivers whereby the signal may be transmitted and received at any time without interfering with the normal operation of the transmitter and without requiring continuous reception of the broadcast program by those listeners not desiring to do so.

An important object of the invention consists in the application of an "alert" or warning signaling system to a frequency modulated radio transmitter and receivers wherein use is made of a signal frequency at the upper end of the audible spectrum which thereby receives maximum amplification in the transmitter predistorter.

It is a further object of the invention to provide for association with a transmitter and signal device of the type just described a frequency modulated receiver in which the superaudible signal is separated from any broadcast signals ahead of the distortion correcting or restoring means whereby it is available at maximum amplitude for use in operating translating devices for various purposes.

Other and further objects and features of the invention will be more apparent to those skilled in the art upon a consideration of the accompanying drawing and following specification wherein is disclosed a single exemplary embodiment of the invention. It will be understood, however, that in its broadest aspect it is capable of a number of embodiments in accordance with the desired use and may be applied to different types of transmitters and receivers. Since neither the transmitter nor the receiver is the subject of the present invention, these parts have been shown more or less conventionally.

In said drawing:

Figure 1 is a schematic diagram of a frequency modulated broadcast transmitter having the present invention applied thereto;

Figure 2 is a schematic diagram of a frequency modulated broadcast receiver having the present invention applied thereto in one of its forms; and

Figure 3 is a detailed showing of certain portions of the receiver involving the circuits of the present invention.

There has long been a demand for some system for transmitting signals, alarms or the like to the users of radio broadcast receivers, but these have not heretofore been generally satisfactory for a number of reasons. It is highly objectionable to many people to maintain a broadcast receiver in continuous operation at such a sound level that it can be heard at all parts of the house, but, unless this has been done heretofore, special signals or warnings could not be received on the emergency occasions when required. Furthermore, it is important that those who wish to use their receivers in the normal way should be permitted to do so without, however, eliminating the provision for the receiving of special signals. In accordance with the present invention it is proposed to apply the signaling system to a frequency modulated transmitter and the corresponding receivers because of the possibility of making use of certain inherent characteristics of the apparatus of this system to improve the operation of the signaling means.

The invention is illustrated in conjunction with what might be termed an air raid "alert system," although it will be obvious that it may be applied to a number of other purposes. For a better understanding of the invention, reference should be had to the drawing where, in Figure 1, is illustrated a conventional frequency modulated broadcast transmitter of the type illustrated in the patent to Edwin H. Armstrong 2,215,284. In this transmitter the conventional studio microphone 10 feeds into a speech preamplifier 12, the output of which is delivered to a predistorter or pre-emphasis filter 14, the output of which is amplified at 15 and delivered to the modulating apparatus of what has been illustrated as a combined modulator-oscillator 16, although it will be understood that any separate oscillator may be arranged to be controlled by the modulator. The output from 16 may pass through the frequency multiplier 17 and the power amplifier 18 before being delivered to the radiating or antenna system 20.

As explained in the above identified patent, the predistorter or pre-emphasis filter 14 comprises a network functioning to so amplify the various frequencies in the audible spectrum that they are amplified at a progressively increasing degree as the frequency rises. In a system such as designed under the regulations promulgated by the Federal Communications Commission, this pre-emphasis filter provides at approximately 18,000 cycles an increase of plus 18½ decibels above zero amplification of the lowest note transmitted.

The system as just described is used for con-

ventional FM broadcast transmission of music, speech and the like, and each receiver, as will be later described, is equipped with a de-emphasis filter or restorer which levels out the amplification so that it is substantially uniform for all frequencies considering the over-all system from the microphone to the speaker.

The present invention provides for the transmission of a continuous note, when desired, for signaling purposes, in or near the super-audible range, preferably at approximately 18,000 cycles which cannot be heard by most persons. This note generated in any desired manner by the apparatus illustrated at **22** is applied ahead of the pre-distorter **14** through separate amplifying means, not shown, if necessary. By being introduced ahead of the predistorter it achieves the benefit of the maximum amplification of any note in the whole transmitted audio spectrum and therefore is received by any receiver at maximum volume insuring consistent, reliable operation of the system.

Figure 2 illustrates a more or less conventional FM receiver comprising the antenna system **24**, a radio frequency amplifier **25**, a converter oscillator **26**, an intermediate frequency amplifier **27**, a limiter **28**, a discriminator detector **30**, a restorer or de-emphasis filter **31**, and a suitable audio frequency amplifier **32** which feeds the conventional speaker or reproducer **33**. Up to and through the discriminator detector the audio portion of the signal is distorted in accordance with the operation of the predistorter **14** at the transmitter, but at **31** the higher frequencies are de-emphasized and reduced to their proper level in respect to the lower frequencies so that the output from the speaker is substantially the same, except for changes in general level, as the input at the microphone **10**.

It is desired that the special signal in accordance with the present invention may be received at any time, therefore the receiving set must be maintained with the tubes lighted at all times and it must be tuned to resonance to the carrier wave transmitted from the station where the special signal is to be sent. Since it may not be desired to listen to the broadcast program at all times when the special signal might occur, a relay switch **35** is conveniently arranged between the amplifier **32** and the speaker **33**. This switch is normally held open as for instance by the spring **36** and can be closed manually in any desired manner, as by lever **35'**, when the broadcast program is to be received.

The switch **35** is arranged to be automatically closed through the function of its magnet coil **38** which is arranged to be energized when the special 18,000 cycle signal is received. For the purpose of energizing the magnet **38** a portion of the output of the discriminator detector is taken off and delivered to the low frequency cut-off filter **40** which rejects all signals below 18,000 cycles or thereabouts. The 18,000 cycle signal resulting from the special signal note readily passes the filter **40**, is amplified at **42** and energizes the magnet **38** as long as the special signal is being received. This closes the switch **35**, places the loud speaker in operation and permits any special message, signal or the like to be given through the microphone **10**. The special signal or warning cannot be satisfactorily delivered by permitting the 18,000 cycle note to issue from the speaker **33** since most persons cannot hear the same.

It is extremely important to take the signal which supplies the filter **40** and amplifier **42** from ahead of the restorer or de-emphasis filter **31** in order that the 18,000 cycle note be at its maximum amplification in respect to the other audio frequencies and therefore capable at all times of supplying adequate voltage to actuate the magnet **38** for closing the switch **35**.

Immediately upon removal of the 18,000 cycle note from the transmitter the amplifier **42** is de-energized along with the magnet **38** and the system returns to the condition described originally.

Referring now to Figure 3 a simple arrangement of the portions **31**, **32**, **40** and **42** of Figure 2 are illustrated. Here the output from the discriminator detector **30** is delivered to the restorer network **45**, constituting the parts in box **31**, as well as to the filter system **46**, constituting the parts in box **40**, through the variable resistance **47**. The filter **46** will be seen to comprise a low frequency rejection or cut-off circuit which serves to pass only frequencies in the neighborhood of and above 18,000 cycles. The output from the filter network **45** passes into a conventional amplifier stage **48** and power stage **50**, constituting the parts in box **32**, from whence it is delivered to the loud speaker **33** as previously described. The output from the low frequency cut-off filter **46** is delivered through a succession of tubes **52**, **53** and **54** and the associated coupling networks constituting a high ratio amplifier, as shown in box **42** of Figure 2, the last stage of which provides adequate current to operate the 5,000 ohm winding of the so-called plate relay **38**, the switch of which is illustrated at **35** in the speaker circuit.

The power source **60** for the receiver and the special amplifier provides all of the necessary potential for the several tubes in the usual manner.

It is obvious that the relay switch **35** may be arranged to perform other functions than those just allotted to it. It may serve to ring a bell, light a light, and so forth, either in conjunction with placing the speaker in operation or independently thereof. It it is arranged to operate some local signal circuit, then such an alert as an air raid alarm would not have to be given vocally or otherwise through the microphone of the transmitter. The mere application of the 18,000 cycle note to the transmitter would be sufficient and no interruption would be required of the normal broadcast program.

As a further extension of the system, the use of the supersonic frequency for the actual transmission of intelligence is suggested. For instance, it may be keyed by a manual or automatic telegraph key and thus result in the multiplexing of signals on the F. M. carrier. In a well known manner several supersonic signals separated in frequency only sufficiently to permit successful filtering may be used for a plurality of telegraph messages without interfering with the broadcast signals on the carrier.

Having thus described the invention, what is claimed as new and desired to be secured by Letters Patent is:

1. In a frequency modulated radio system, in combination, a transmitter including a speech frequency predistorter arranged to amplify the speech frequency spectrum at progressively increasing rates toward the high frequency end, means to modulate the transmitter with such distorted broadcast programs, means to separately apply to the predistorter a note of constant frequency near the peak of the audible range, a conventional frequency modulated receiver including a restorer to correct said predistortion and

apply the output to a speaker, a filter excluding frequencies below said note frequency associated with said receiver ahead of said restorer, means to amplify said note frequency from said filter, a normally open relay switch in the speaker circuit, said amplified note frequency current being arranged to close said relay switch.

2. In a frequency modulated radio system, a transmitter including a predistorter, means to deliver broadcast programs to said predistorter to modulate the transmitter, a source of frequency near the upper audible limit for application to said predistorter to additionally modulate the transmitter, a receiver including a restorer to correct said predistortion, a speaker adapted to be actuated from the output of said restorer to reproduce said broadcast programs, a filter connected to receive energy from said receiver ahead of said restorer, said filter being constructed to reject signals of frequencies lower than said above mentioned source, and a translating device energized from the output of said filter.

3. In a frequency modulated radio system, a transmitter including a predistorter, means to deliver broadcast programs to said predistorter to modulate the transmitter, a source of frequency near the upper audible limit for application to said predistorter to additionally modulate the transmitter, a receiver including a restorer to correct said predistortion, a speaker adapted to be actuated from the output of said restorer to reproduce said broadcast programs, a filter connected to receive energy from said receiver ahead of said restorer, said filter being constructed to reject signals of frequencies lower than said above mentioned source, and a translating device energized from the output of said filter, said translating device being in control of the operation of said speaker.

4. In a frequency modulated radio system, a transmitter including a predistorter, means to deliver broadcast programs to said predistorter to modulate the transmitter, a source of frequency near the upper audible limit for application to said predistorter to additionally modulate the transmitter, a receiver including a restorer to correct said predistortion, a speaker adapted to be actuated from the output of said restorer to reproduce said broadcast programs, a filter connected to receive energy from said receiver ahead of said restorer, said filter being constructed to reject signals of frequencies lower than said above mentioned source, a normally open switch between said restorer and speaker, and a magnet adapted to close said switch, said magnet being connected for energization from the high frequency signal output of said filter.

5. In a radio broadcasting system of the frequency modulated type, a transmitter, a pre-emphasis filter therefor, means for superimposing on the normal transmitted program a temporary, inaudible signal of a frequency to obtain substantially the maximum emphasis from said filter, a plurality of receivers, a de-emphasis filter for each adapted to restore and deliver the normal program to a reproducer, means on said receivers to normally render the reproducers inoperative when only the normal program is transmitted, and means on said receivers responsive to said inaudible signal before de-emphasis to render the reproducers operative for the normal signal.

6. In a radio broadcasting system of the frequency modulated type, a transmitter, a pre-emphasis filter therefor, means for superimposing on the normal transmitted program a temporary, inaudible signal of a frequency to obtain substantially the maximum emphasis from said filter, a plurality of receivers, a de-emphasis filter for each adapted to restore and deliver the normal program to a reproducer, means on said receivers to normally render the reproducers inoperative when only the normal program is transmitted, means on said receivers responsive to said inaudible signal before de-emphasis to render the reproducers operative for the normal signal, and means on each receiver to manually render the reproducer operative for normal programs.

7. The method of enabling a listener to receive warnings, special signals and the like on a radio receiver without having to listen to a broadcast program all the while the receiver is turned on, comprising transmitting a F. M. broadcast program, superimposing on the same carrier a warning signal at the upper range of audibility, amplifying said signal at a higher ratio than any other transmitted frequency, receiving the signals, separating the broadcast signals from the warning signals, and using the latter to control the application of the former to a reproducer.

8. The method of enabling a listener to receive warnings, special signals and the like on a radio receiver without having to listen to a broadcast program all the while the receiver is turned on, comprising transmitting a F.M. broadcast program, superimposing on the same carrier a warning signal at the upper range of audibility, amplifying said signal at a higher ratio than any other transmitted frequency, receiving the signals, separating the broadcast signals from the warning signals before changing the relative amplification of the same, and using the latter to control the application of the former to a reproducer.

9. The method of enabling a listener to receive warnings, special signals and the like on a radio receiver without having to listen to a broadcast program all the while the receiver is turned on, comprising transmitting a F. M. broadcast program, superimposing on the same carrier a warning signal at the upper range of audibility, amplifying said signal at a higher ratio than any other transmitted frequency, receiving the signals, withholding the broadcast signals from reproduction, separating the warning signals when received from the others and using them to cause the reproduction of the broadcast signals.

JOHN B. CARAWAY, JR.