Aug. 7, 1934. G. S. KNAPP 1,969,139

GOLF PRACTICE DEVICE

Filed Nov. 19, 1930

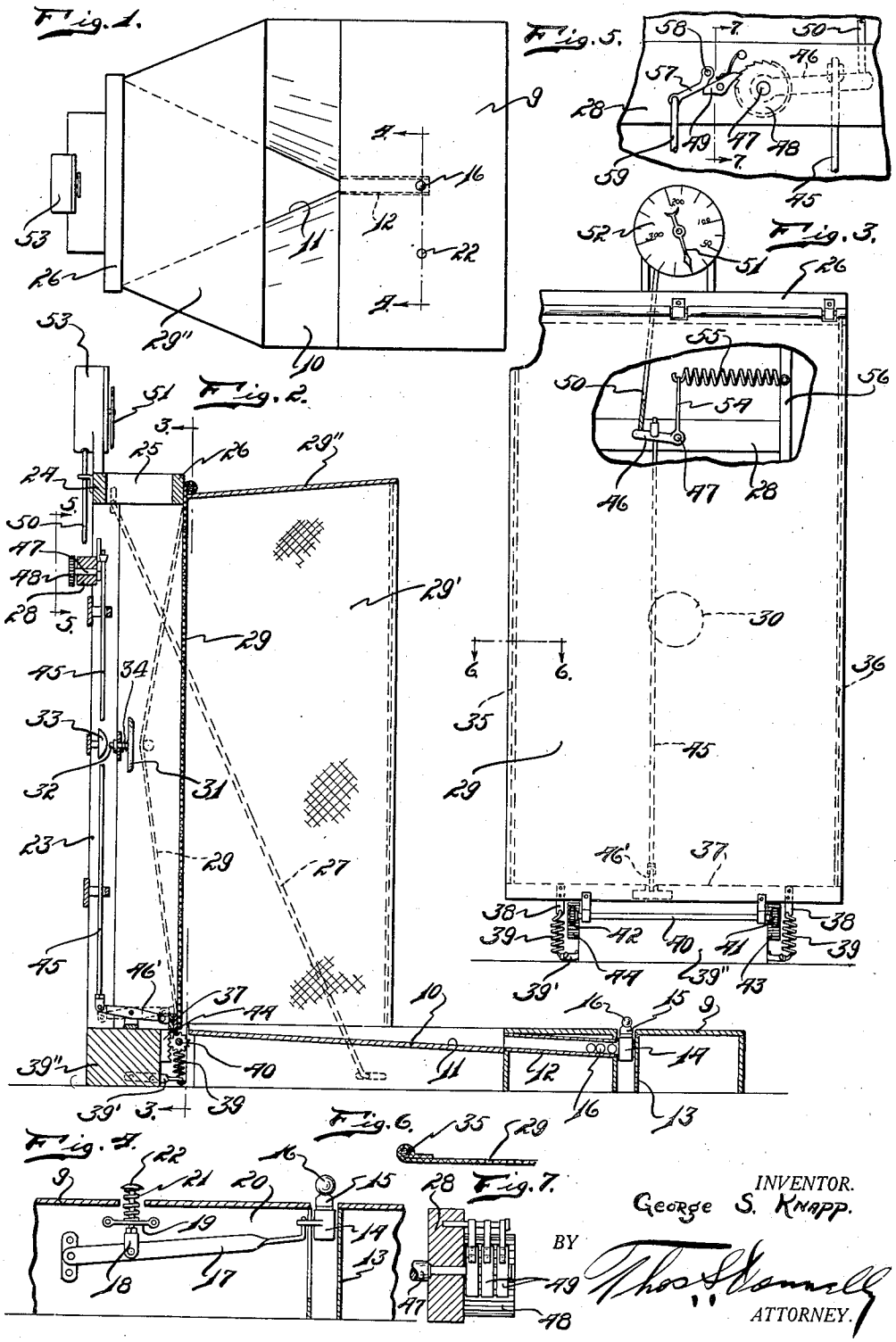

Patented Aug. 7, 1934 1,969,139

UNITED STATES PATENT OFFICE

1,969,139

GOLF PRACTICE DEVICE

George S. Knapp, Highland Park, Mich.

Application November 19, 1930, Serial No. 496,625

2 Claims. (Cl. 273—35)

My invention relates to a new and useful improvement in a golf practice device and has for its object the provision of a device with which one may practice driving a golf ball and ascertain with some degree of accuracy the distance of flight of the golf ball.

It is another object of the invention to provide a flexible yieldable background against which the ball may be driven, so arranged and constructed that the impact of a ball driven thereagainst will serve to operate a distance indicating mechanism.

Another object of the present invention is the provision of a device of this class which will be simple in structure, economical of manufacture, and highly efficient in use.

Other objects will appear hereinafter.

The invention consists in the combination and arrangement of parts hereinafter described and claimed.

The invention will be best understood by a reference to the accompanying drawing which forms a part of this specification, and in which

Fig. 1 is a top plan view of the invention.

Fig. 2 is a central vertical sectional view of the invention with parts broken away.

Fig. 3 is a front elevational view of the invention with parts broken away, taken on line 3—3 of Fig. 2.

Fig. 4 is a fragmentary sectional view taken on line 4—4 of Fig. 1.

Fig. 5 is a fragmentary view taken on line 5—5 of Fig. 2.

Fig. 6 is a fragmentary sectional view taken on line 6—6 of Fig. 3.

Fig. 7 is a sectional view taken on line 7—7 of Fig. 5.

The invention comprises a platform 9 having a rear portion 10 provided with the trough formation 11 which is inclined forwardly to a conduit 12 terminating at the vertical tubular portion 13 in which is slidably mounted the lifting head 14 having a suitable tip 15 which will serve as a tee on which a ball 16 may be placed to be driven. This head 14 is carried by the free end of the arm 17 which is pivotally mounted on the supporting partition 20. Pivotally connected at one end of the arm 17 intermediate its ends is a plunger 18 projecting through the guide bracket 19 which is mounted on the supporting partition 20, a coil spring 21 embraces the plunger and engages at one end the head 22 so as to normally retain the arm 17 in the position shown in Fig. 4. When the head 14 is in the position shown in Fig. 4, or Fig. 2, the head serves as an abutment against which the ball 16 rolling downwardly in the tube 12 may engage. After a player has driven the ball 16 from the tee 15, the plunger 18 may be forced downwardly with the foot so as to rock the arm 17 downwardly into such a position that the tip 15 will be positioned below the end of the tube 12 and the next succeeding ball in the tube 12 may roll onto the tip. Upon release of the downward pressure of the plunger 18, the arm 17 will be restored to the position shown in Fig. 4 carrying the ball 16 on the tip 15 upwardly into position for driving.

Projecting upwardly from the platform are uprights or supports 23 connected by the cross members 24 and 28. The uprights are connected to the outwardly projecting supports 25 which serve to carry the cross bar 26. At opposite sides of the frame thus provided are the diagonally extended brace rods 27. Secured to and depending from the cross bar 26 is the flexible background 29, against which the ball 16 may be driven. A central target 30 is displayed on the face of the background 29 in registration with the slidably mounted disc 31 which carries the plunger 32 adapted to be driven inwardly to strike the bell 33, the spring 34 normally retaining the plunger 32 in spaced relation to the bell 33.

The flexible background or curtain 29 is reinforced at its opposite edges with flexible reinforcing wire ropes 35 and 36 so that when a ball is driven against the flexible curtain adjacent either edge, the curtain will not be flexed outwardly of its edges but the curtain will be flexed inwardly to bring about the registration desired. A catch basin consisting of a top 29'' which is preferably formed from a light paper board, and the flexible side curtains 29' serves as a receptacle for the balls which are driven from the tee 15. The curtain or flexible background 29 is provided at its lower edge with a transversely extended rigid reinforcing bar 37. Clips 38 are secured to and projected outwardly from the lower edge of the reinforcing bar 37 and connected to one end of the coil springs 39, the other ends of which are connected to the brackets 39' mounted on the cross member 39''. An axle 40 is carried by the cross bar 37 and depended therefrom, and on the end of the axle 40 are fixedly mounted gears 41 and 42 adapted to mesh with the stationary rack bars 43 and 44. The construction is such that when a ball is driven against the curtain or flexible background 29, the same will be flexed inwardly as shown in dotted lines in Fig. 2, the lower edge of the curtain or flexible background 29 moving upwardly. The provision of the bar 37 with the gears operating on the rack bars as-

sures a movement of both sides of the curtain in unison so that the lower edge of the curtain or flexible background 29 will always remain horizontal. This upward movement of the lower edge of the curtain or background 29 is, of course, against the tension of the springs 39. As the bar 37 moves upwardly, the beam 46' will be rocked so as to move the rod 45 downwardly. As the rod 45 moves downwardly, the lever 46 will be rocked on the shaft 47 as a pivot, this lever 46 being fixedly mounted on the shaft 47. On the rear end of the shaft 47 is mounted the ratchet wheel 48 engaging which are the rockably mounted dogs 49. As the arm 46 is rocked downwardly, the rod 50 will be moved downwardly so as to effect, through a suitable gearing mechanism, a rotation of the pointer 51 relatively to the indicating dial 52, the operating mechanism of the register being inclosed in the housing 53. Since the specific form of indicating mechanism forms no part of the present invention, a detailed description of the same is not given. An arm 54 projects outwardly from the pivoted end of the arm 46 and is connected at one end to the spring 55, the other end of the spring being connected to a suitable support 56 so that the spring 55 will serve to cooperate with the springs 39. As the arm 46 is rocked downwardly, the dog 40, cooperating with the rigid wheel 48, will prevent a return of the mechanism to its normal position so that the pointer 51 will remain in position to indicate the approximate distance of the drive. The dog 49 may be rocked to inoperative position by means of the arm 57 which is pivotally connected at one end as at 58 and which is connected at its opposite end to the cord 59 which may be extended to any desired position so as to be accessible to the operator.

With a device constructed in this manner a person may practice golf swings and obtain, in addition to considerable practice in swinging, also practice in accuracy with a fair estimate as to the distance of the drives made.

The durability and simplicity of the structure is believed evident from the description given.

While I have illustrated and described the preferred form of my invention, I do not wish to limit myself to the precise detail of structure shown but desire to avail myself of such variations and modifications as come within the scope of the appended claims.

Having thus described my invention, what I claim as new, and desire to secure by Letters Patent is:

1. In a golf practice device of the class described, a flexible background against which balls may be driven, the lower end of said background being movable; a rigid reinforcing member secured to the lower edge of said background; resilient means connecting to said rigid member for resisting vertical movement of the lower edge of said background; a pair of vertically extended stationary rack bars adjacent opposite sides of said background a shaft rotatably mounted on said background; a pair of gears fixedly mounted on said shaft, each meshing with one of said rack bars for preventing tilting movement of the lower edge of said background upon vertical movement of the same.

2. In a golf practice device of the class described, a flexible background against which balls may be driven, the lower end of said background being movable vertically; a plurality of stationary vertically extended rack bars; a shaft rotatably mounted on said background adjacent its lower edge; and a plurality of pinions each fixedly mounted on said shaft and each of said pinions meshing with one of said rack bars for preventing tilting of the lower edge of said background upon vertical movement of the same.

GEORGE S. KNAPP.