US00RE37256E

(19) **United States**
(12) **Reissued Patent**
Cohen et al.

(10) **Patent Number: US RE37,256 E**
(45) **Date of Reissued Patent: Jul. 3, 2001**

(54) **SYSTEM AND METHOD FOR GENERATING PRECISE POSITION DETERMINATIONS**

(75) Inventors: **Clark E. Cohen**, Palo Alto; **Bradford W. Parkinson**, Los Altos; **John D. Powell**, Menlo Park; **David G. Lawrence**; **Boris S. Pervan**, both of Mountain View; **Henry S. Cobb**, Stanford, all of CA (US)

(73) Assignee: **IntegriNautics, Inc.**, Menlo Park, CA (US)

(21) Appl. No.: **09/187,194**

(22) Filed: **Nov. 5, 1998**

Related U.S. Patent Documents

Reissue of:
(64) Patent No.: **5,572,218**
Issued: **Nov. 5, 1996**
Appl. No.: **08/480,021**
Filed: **Jun. 7, 1995**

U.S. Applications:

(63) Continuation of application No. 08/410,011, filed on Mar. 22, 1995, now abandoned, which is a continuation of application No. 08/036,319, filed on Mar. 24, 1993, now abandoned.

(51) **Int. Cl.**[7] **G01S 5/10**; G01S 1/68; G01S 5/02; G01S 1/08; H04B 7/185

(52) **U.S. Cl.** **342/357.06**; 342/386; 342/357.04

(58) **Field of Search** 342/357.04, 357.06, 342/357.11, 357.12, 357.14, 386

(56) **References Cited**

U.S. PATENT DOCUMENTS

4,667,203 * 5/1987 Counselman, III 342/357.06
4,672,382 * 6/1987 Fukuhara et al. 342/357.06
4,754,465 * 6/1988 Trimble 375/1

(List continued on next page.)

OTHER PUBLICATIONS

Expanding The Performance Envelope of GPS–Based Attitude Determination, by Clark E. Cohen, et al., Institute of Washington, Albuquerque, NM, Sep. 9–13, 1991.*

Flight Tests of Attitude Determination Using GPS Compared Against An Inertial Navigation Unit, by Clark E. Cohen, et al., Institute of Navigation, San Francisco, CA, Jan. 20–22, 1993.*

Integer Ambiguity Resolution Of The GPS Carrier For Spacecraft Attitude Determination, by Clark E. Cohen, et al., 15th Annual AAS Guidance & Control Conference, Keystone, CO, Feb. 8–12, 1992.*

(List continued on next page.)

Primary Examiner—Gregory C. Issing
(74) *Attorney, Agent, or Firm*—Flehr Hohbach Test Albritton & Herbert LLP

(57) **ABSTRACT**

A GPS system and method for generating precise position determinations. The GPS system includes a ground based GPS reference system which receives with a reference receiver GPS signals and makes phase measurements for the carrier components of the GPS signals. The GPS reference system then generates and broadcasts an initialization signal having a carrier component and a data link signal having a data component. The data component of the data link signal contains data representing the phase measurements made by the reference receiver. The GPS system also includes a GPS mobile system which receives with a mobile position receiver the same GPS signals as were received by the reference system. In addition, the GPS position receiver receives the data link and initialization signals broadcast by the reference system. The GPS position receiver then makes phase measurements for the carrier components of the GPS signals during and after an initialization period and makes phase measurements for the initialization signal during the initialization period. In response to the phase measurements made by both the reference receiver and the position receiver during the initialization period, the position receiver generates initialization values representing resolution of the integer ambiguities of the received signals. In response to the initialization values and the phase measurements made by both the receivers after the initialization period, the position receiver generates precise position determinations to within centimeters of the exact location.

25 Claims, 19 Drawing Sheets

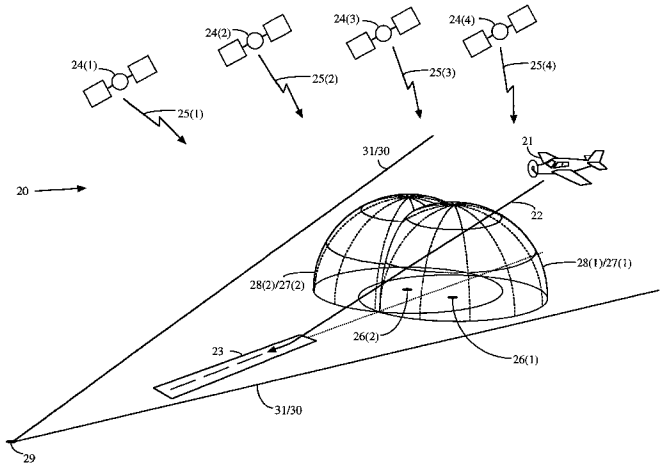

U.S. PATENT DOCUMENTS

4,894,655	*	1/1990	Joguet et al.	342/357.03
4,928,106	*	5/1990	Ashjee et al.	342/352
4,972,431	*	11/1990	Keegan	375/1
5,134,407	*	7/1992	Lorenz et al.	342/352
5,177,489	*	1/1993	Hatch	342/357.04
5,252,982	*	10/1993	Frei	342/357.03
5,311,194	*	5/1994	Brown	342/357.06

OTHER PUBLICATIONS

Attitude Determination Using GPS, by Clark E. Cohen, Dissertation for Ph.A. from Stanford University, Dec. 1992.*

Ambiguity Resolution On–The–Fly–A Comparison of P Code And High Performance C/A Code, by Dr. Gerard Lachapelle, et al., Institute of Navigation, GPS–92, Albuquerque, NM, Sep. 1992.*

Aircraft Applications of GPS–Based Attitude Determination, by Clark E. Cohen, et al., Institute of Navigation, GPS–92, Albuquerque, NM, Sep. 1992.*

Kinematic GPS For Differential Positioning: Resolving Integer Ambiguities On The Fly, by Patrick Y. C. Hwang, GPS Papers published in Navigation, vol. 38, No.1, Jan. 1991.*

Application & Technical Notes, Real–Time Kinematic GPS Surveying Technical Overview, published by Trimble Navigation, Jan. 1992.*

Landau, H., et al., "Precise Real–Time Differential GPS Positioning Using On–The Fly Ambiguity Resolution", Institute of Astonomical and Physical Geodesy, University FAF Munich.*

"Site Surveyor,—Real–Time GPS Survey System," by Trimble Navigation, Oct. 1992.*

"Application & Technical Notes,—Real–Time Kinematic GPS Surveying Technical Overview," by Trimble Navigation.*

"Surveying and Mapping Products—System Surveyor, Series 4000, GPS Survey System," by Trimble Navigation, 1992.*

Ambiguity Resolution On–The–Fly—Comparison Of P Code And High Performance C/A Code Receiver Technologies, by Dr. Gerard Lachapelle, et al., pp. 1025–1032.*

Aircraft Applications OF GPS–Based Attitude Determination, by Clark E. Cohen, et al., Stanford University, Dept. of Aeronautics and Astronautics.*

Instantaneous Ambiquity Resolution, by Ron Hatch, Paper Presented Sep. 11, 1990 at Banff, Canada at KIS Symposium 1990.*

A GPS Precision Approach And Landing System, by Dr. Alison K. Brown, Inst. of Navigation, GPS–92, Albuquerque, NM, Sep. 1992, pp. 373–381.*

Kinematic GPS For Differential Positioning: Resolving Integer Ambiguities On The Fly, by Patrick Y.C. Hwang, Rockwell Intl. Corp., Cedar Rapids, Iowa, Jan. 1991.*

The Application Of Navstar Differential GPS In The Civilian Community, by Jacques Beser, et al., GPS Papers Published in Navigation, vol. II, 1984, pp. 167–196.*

The Use Of Pseudo Satellites For Improving GPS Performance, by Dale Klein, et al., GPS Papers Published in Navigation, vol. III, 1986, pp. 135–146.*

RTCM SC–104 Recommended Pseudolite Signal Specification, by Thomas A. Stansell, Jr., GPS Papers Published in Navigation, vol. III, 1986, pp. 117–134.*

* cited by examiner

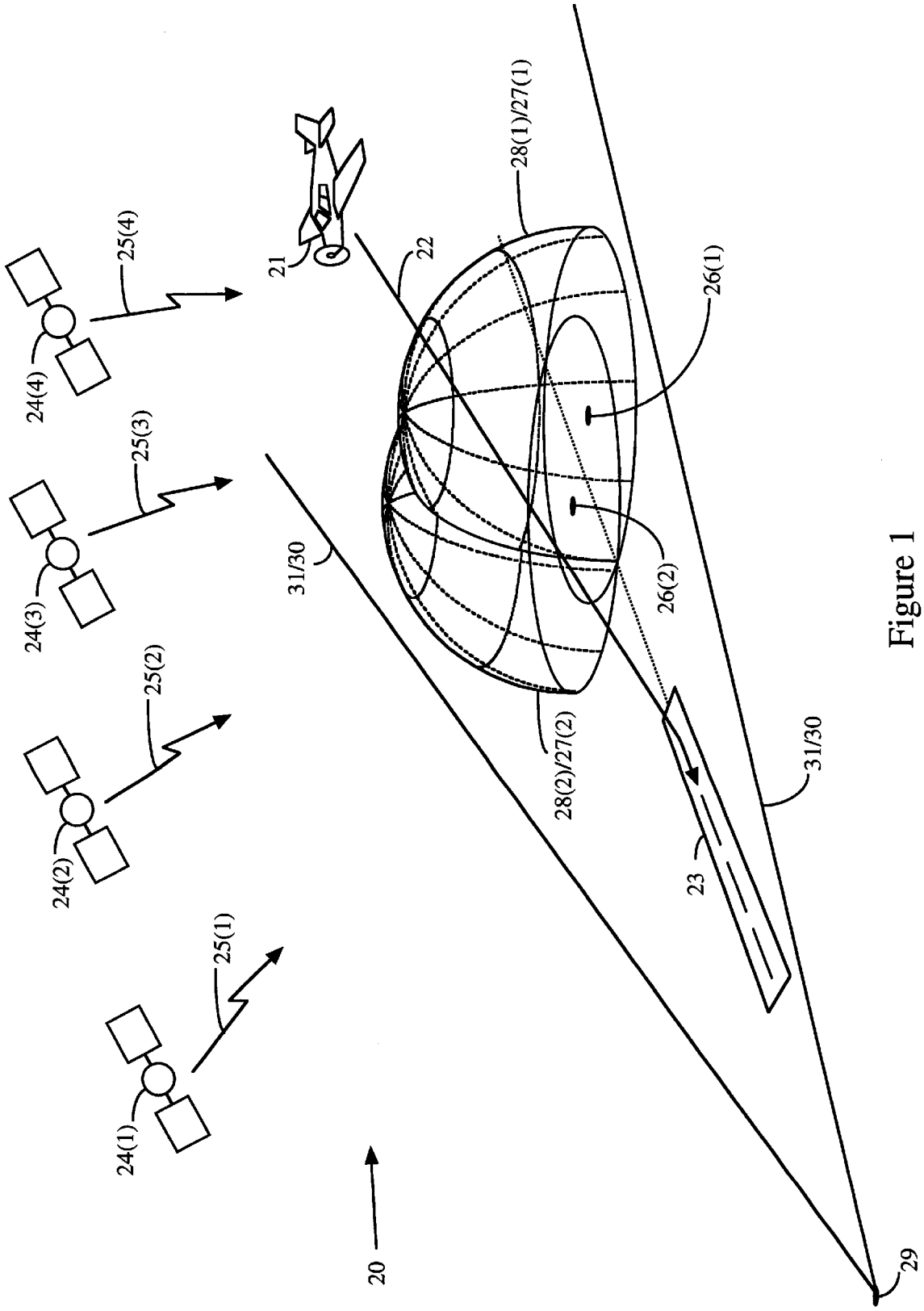
24(1)
24(2)
24(3)
24(4)
25(1)
25(2)
25(3)
25(4)
20
21
22
23
26(1)
26(2)
28(1)/27(1)
28(2)/27(2)
29
31/30
31/30

Figure 1

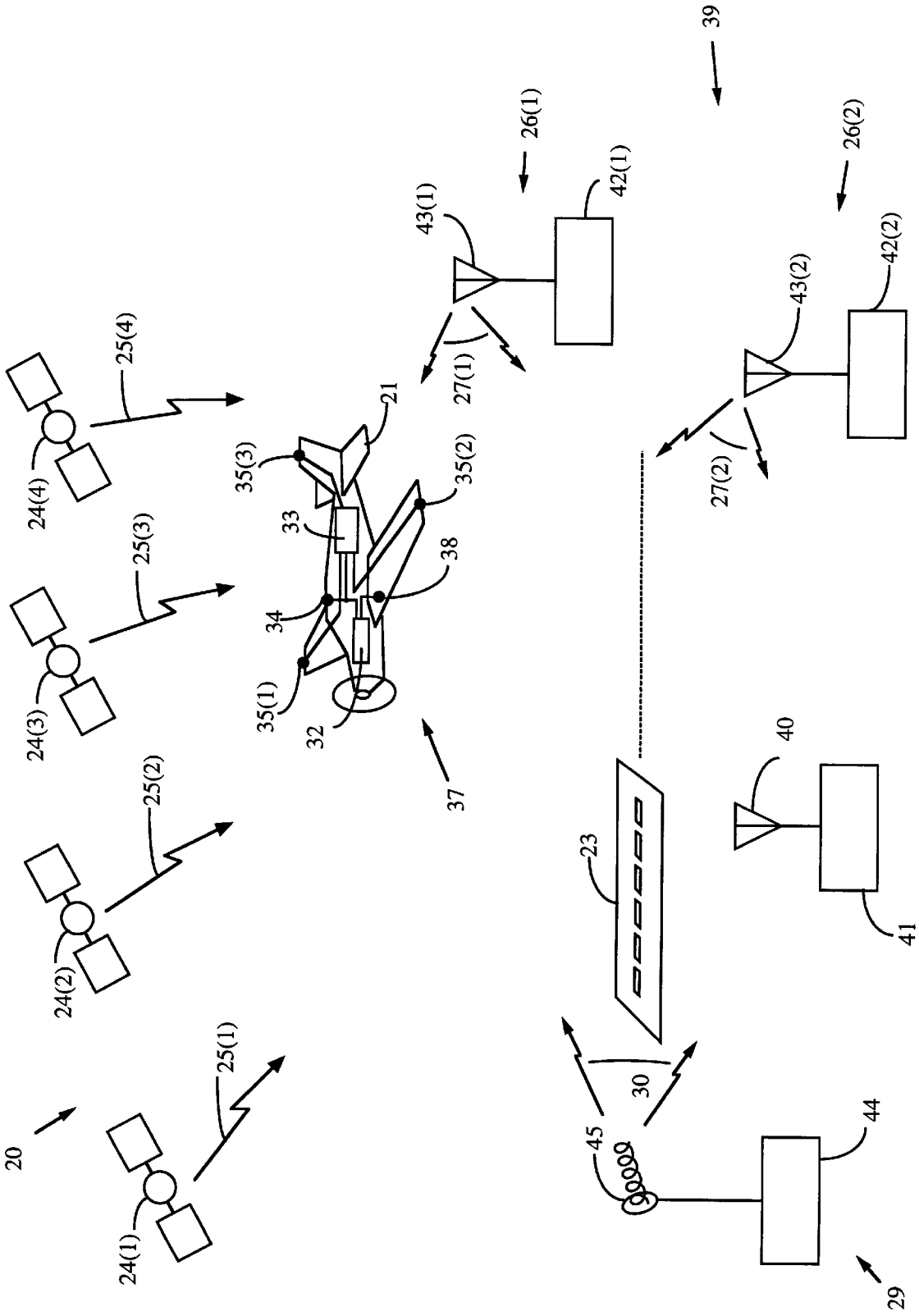
20
24(1)
25(1)
24(2)
25(2)
24(3)
25(3)
24(4)
25(4)
21
35(3)
33
34
35(1)
32
35(2)
38
37
43(1)
26(1)
42(1)
27(1)
39
43(2)
26(2)
42(2)
27(2)
23
40
41
45
30
44
29

Figure 2

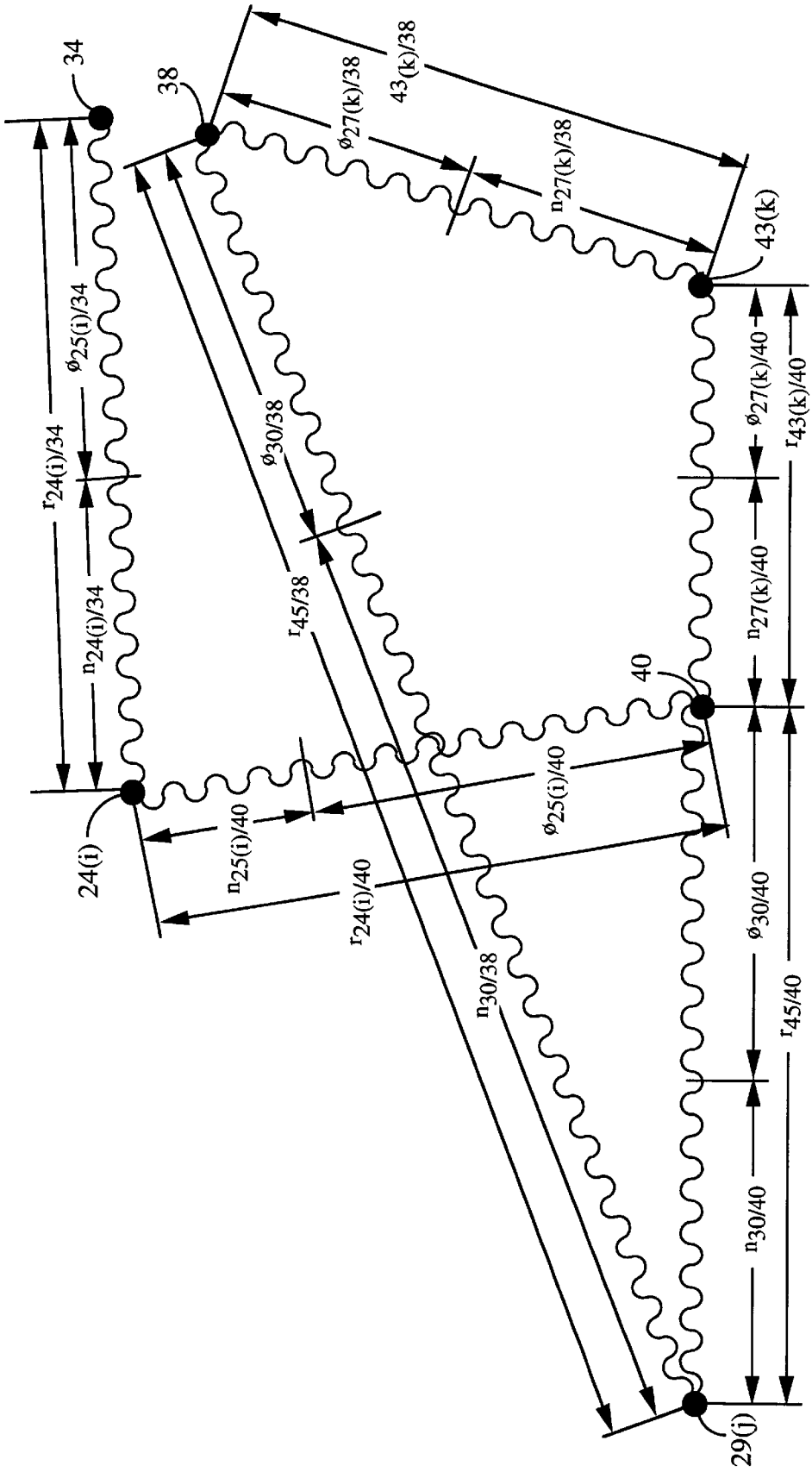
34
38
43(k)/38
ø27(k)/38
n27(k)/38
43(k)
r24(i)/34
ø25(i)/34
n24(i)/34
ø30/38
r45/38
ø27(k)/40
r43(k)/40
n27(k)/40
40
ø25(i)/40
24(i)
n25(i)/40
r24(i)/40
n30/38
ø30/40
r45/40
n30/40
29(j)

Figure 3

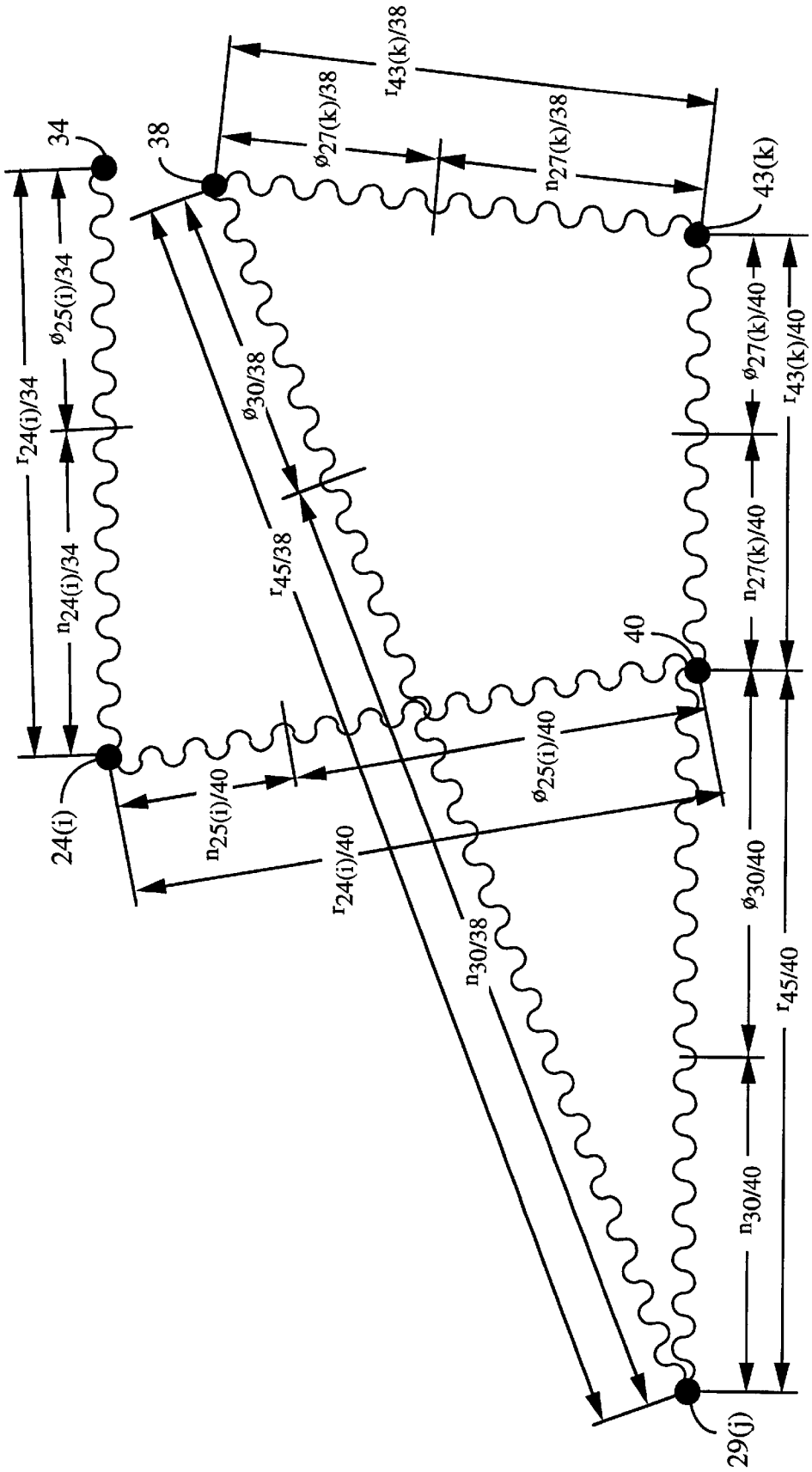
34
38
43(k)
24(i)
40
29(j)
r43(k)/38
ø27(k)/38
n27(k)/38
ø25(i)/34
r24(i)/34
n24(i)/34
ø30/38
r45/38
ø27(k)/40
r43(k)/40
n27(k)/40
ø25(i)/40
n25(i)/40
r24(i)/40
n30/38
ø30/40
r45/40
n30/40

Figure 4

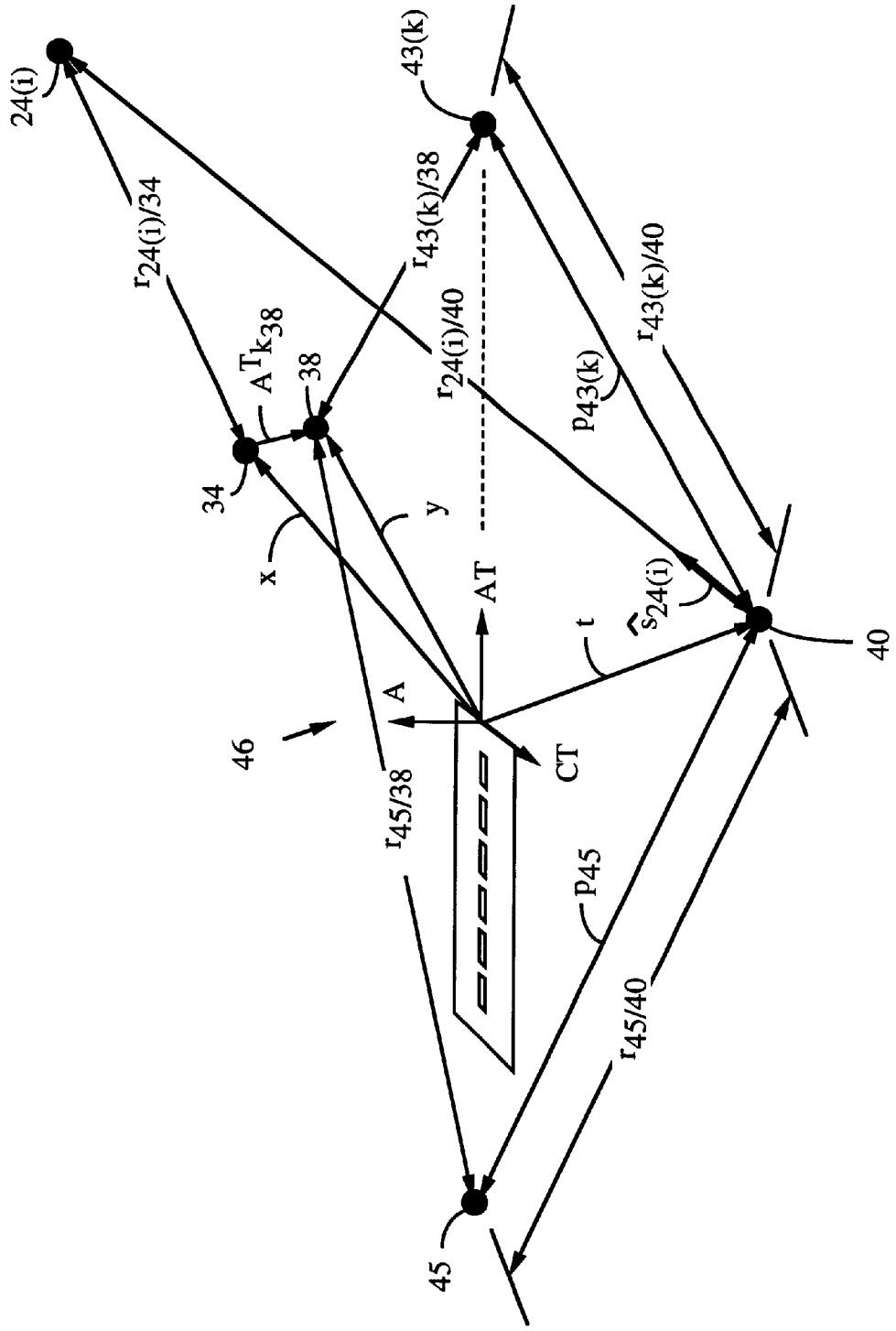
24(i)
$r_{24(i)/34}$
34
$A^{T}k_{38}$
38
x
y
46
A
$r_{45/38}$
AT
CT
t
$\hat{s}_{24(i)}$
$r_{24(i)/40}$
$r_{43(k)/38}$
43(k)
$p_{43(k)}$
$r_{43(k)/40}$
40
p_{45}
$r_{45/40}$
45

Figure 5

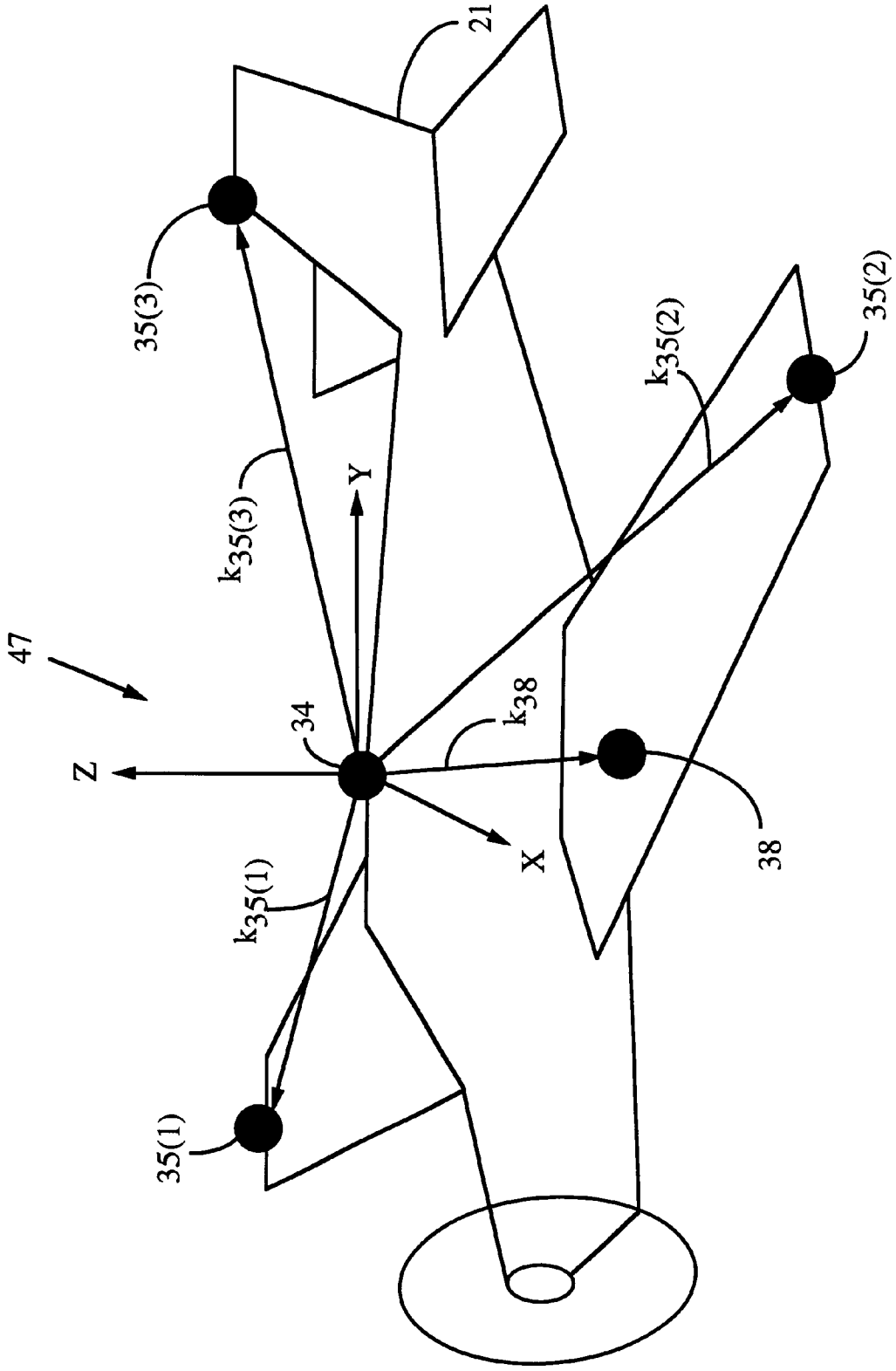

Figure 6

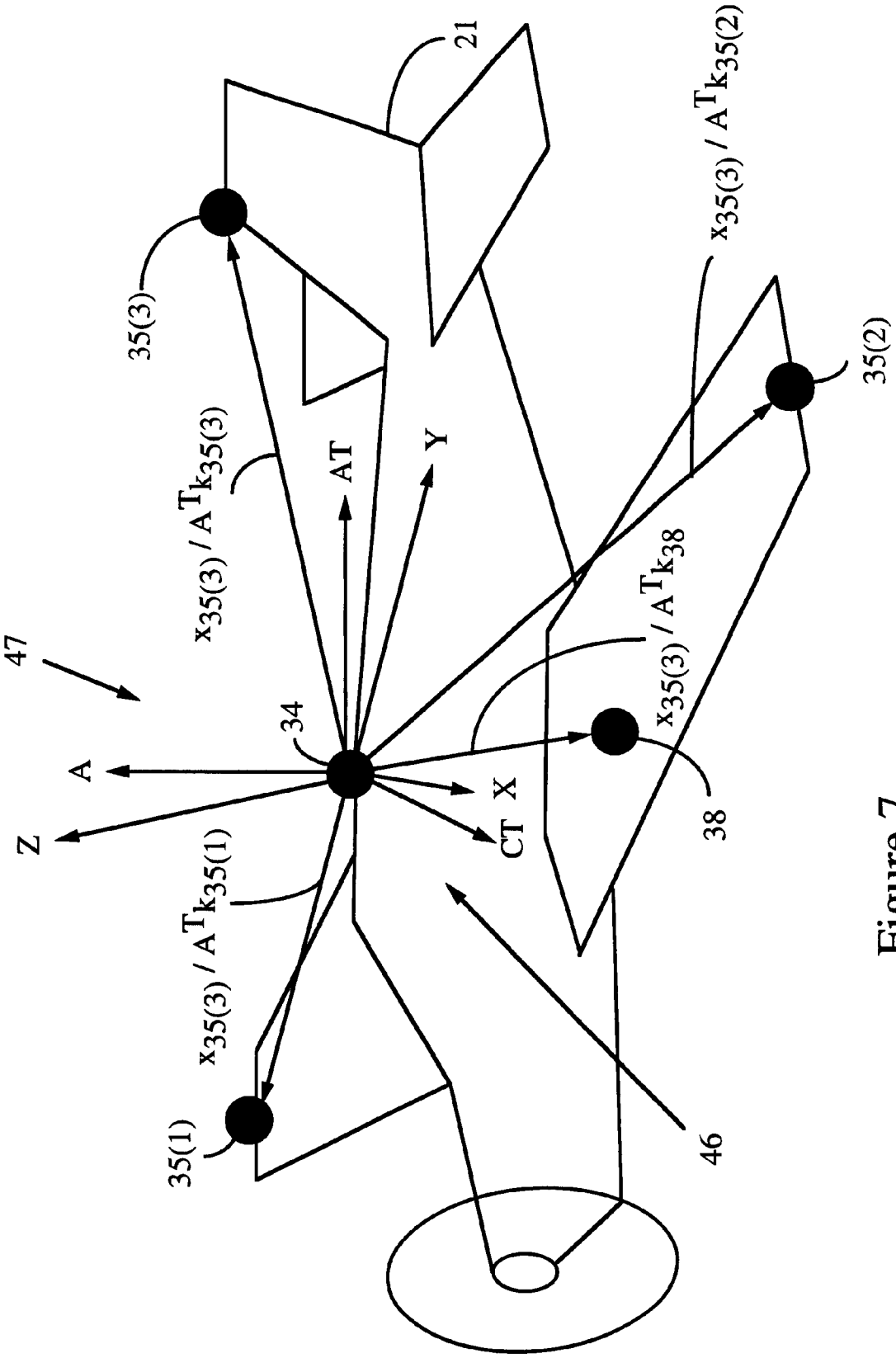
21
35(3)
35(2)
35(1)
$x_{35(3)} / A^T k_{35(3)}$
$x_{35(3)} / A^T k_{35(2)}$
$x_{35(3)} / A^T k_{35(1)}$
$x_{35(3)} / A^T k_{38}$
AT
Y
X
CT
A
Z
34
38
46
47

Figure 7

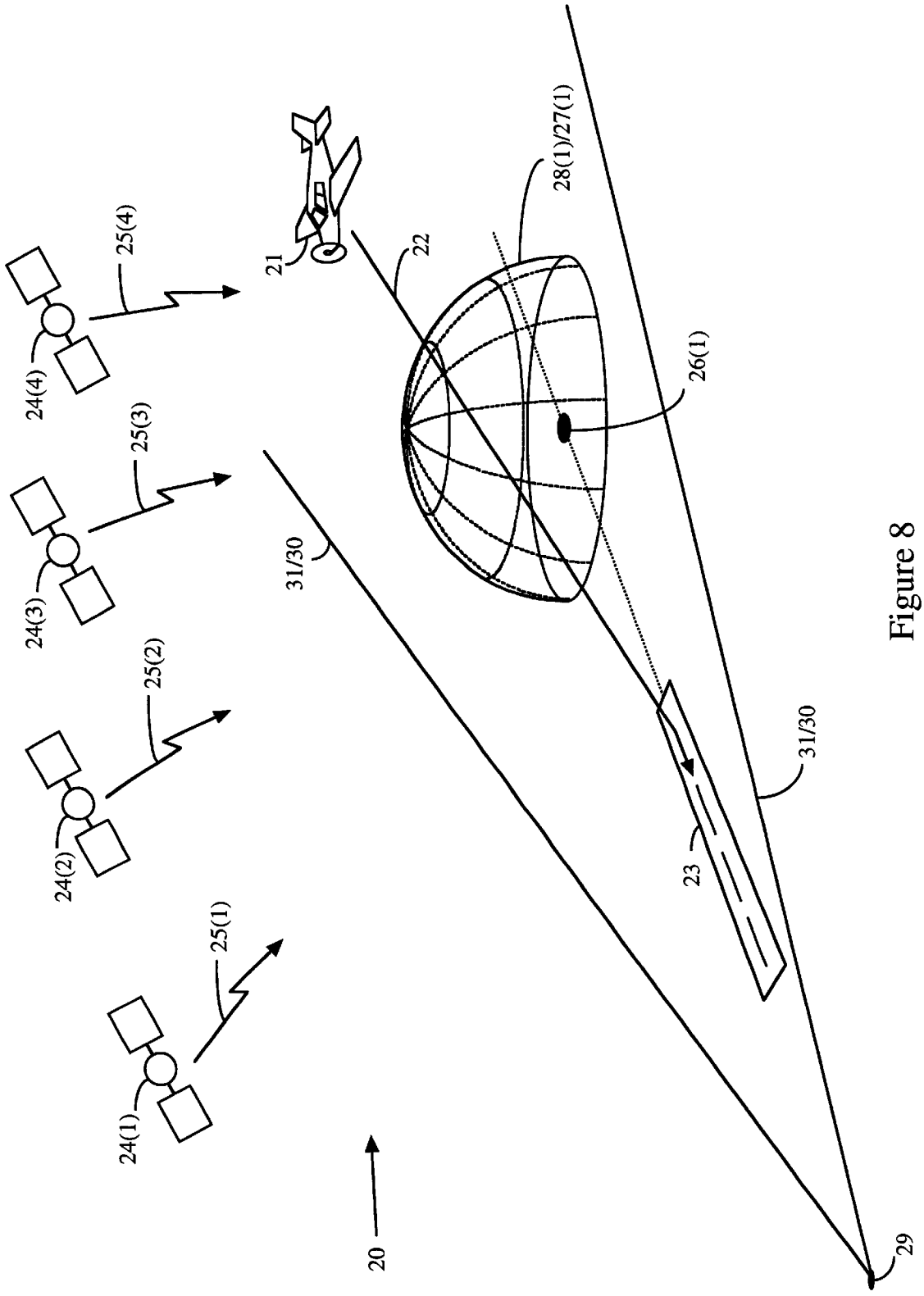
24(1)
24(2)
24(3)
24(4)
25(1)
25(2)
25(3)
25(4)
20
21
22
23
28(1)/27(1)
26(1)
31/30
31/30
29

Figure 8

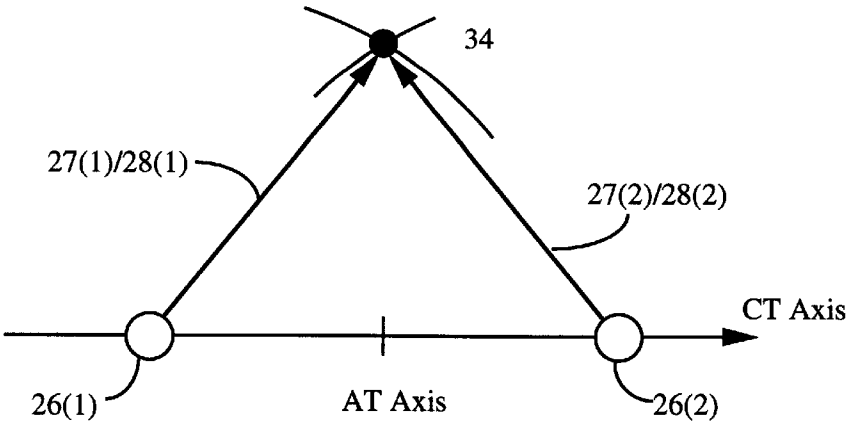

Figure 9

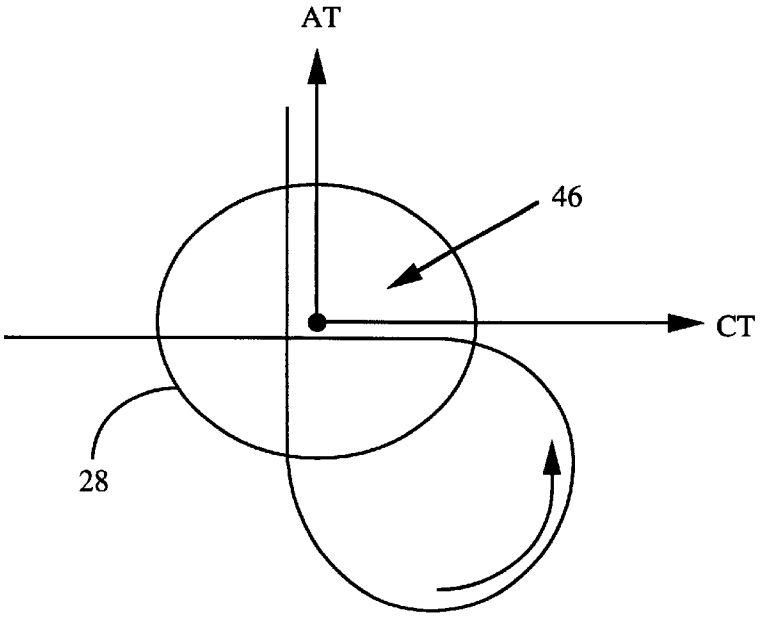

Figure 10

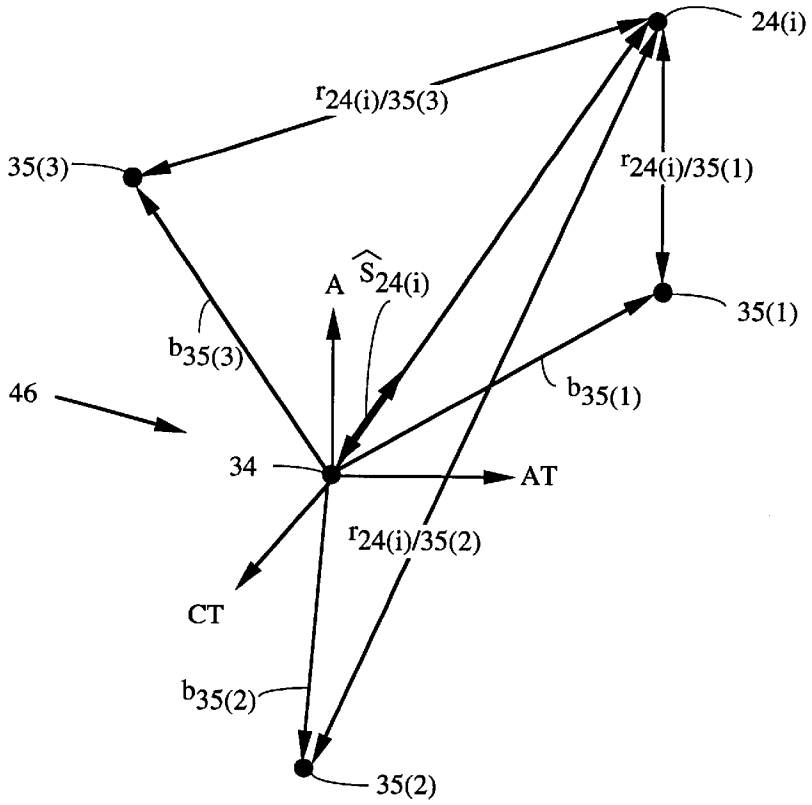

Figure 11

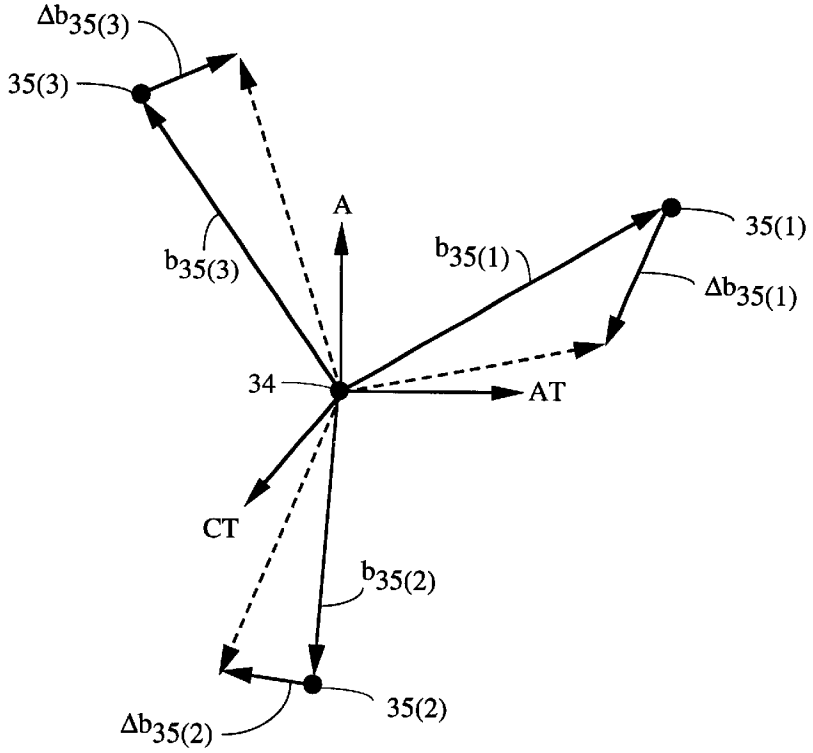

Figure 12

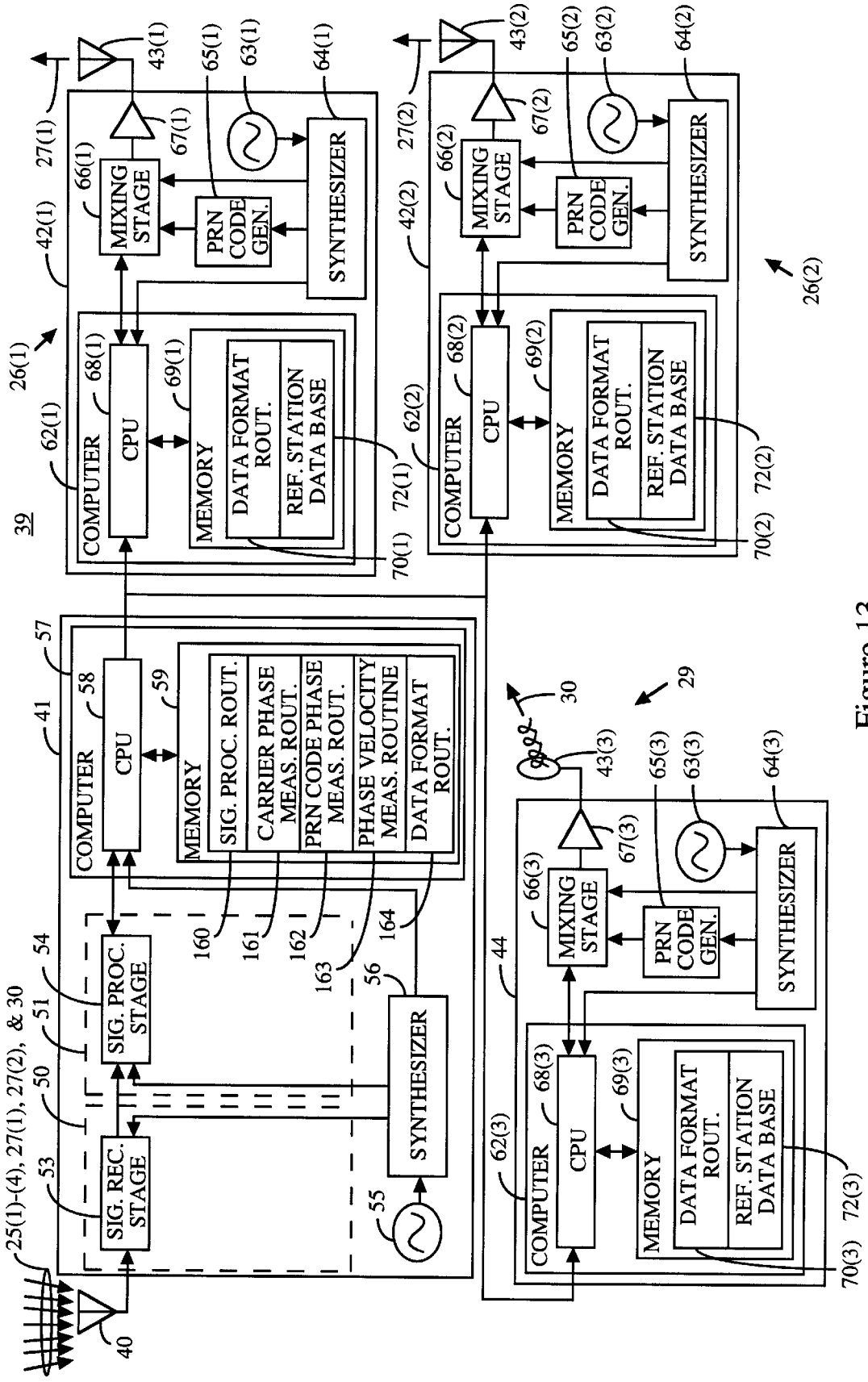
39
COMPUTER
CPU
MEMORY
DATA FORMAT ROUT.
REF. STATION DATA BASE
MIXING STAGE
PRN CODE GEN.
SYNTHESIZER
SIG. PROC. ROUT.
CARRIER PHASE MEAS. ROUT.
PRN CODE PHASE MEAS. ROUT.
PHASE VELOCITY MEAS. ROUTINE
SIG. PROC. STAGE
SIG. REC. STAGE
25(1)-(4), 27(1), 27(2), & 30
26(1)
26(2)
29
30
40
41
42(1)
42(2)
43(1)
43(2)
43(3)
44
50
51
53
54
55
56
57
58
59
62(1)
62(2)
62(3)
63(1)
63(2)
63(3)
64(1)
64(2)
64(3)
65(1)
65(2)
65(3)
66(1)
66(2)
66(3)
67(1)
67(2)
67(3)
68(1)
68(2)
68(3)
69(1)
69(2)
69(3)
70(1)
70(2)
70(3)
72(1)
72(2)
72(3)
160
161
162
163
164
27(1)
27(2)

Figure 13

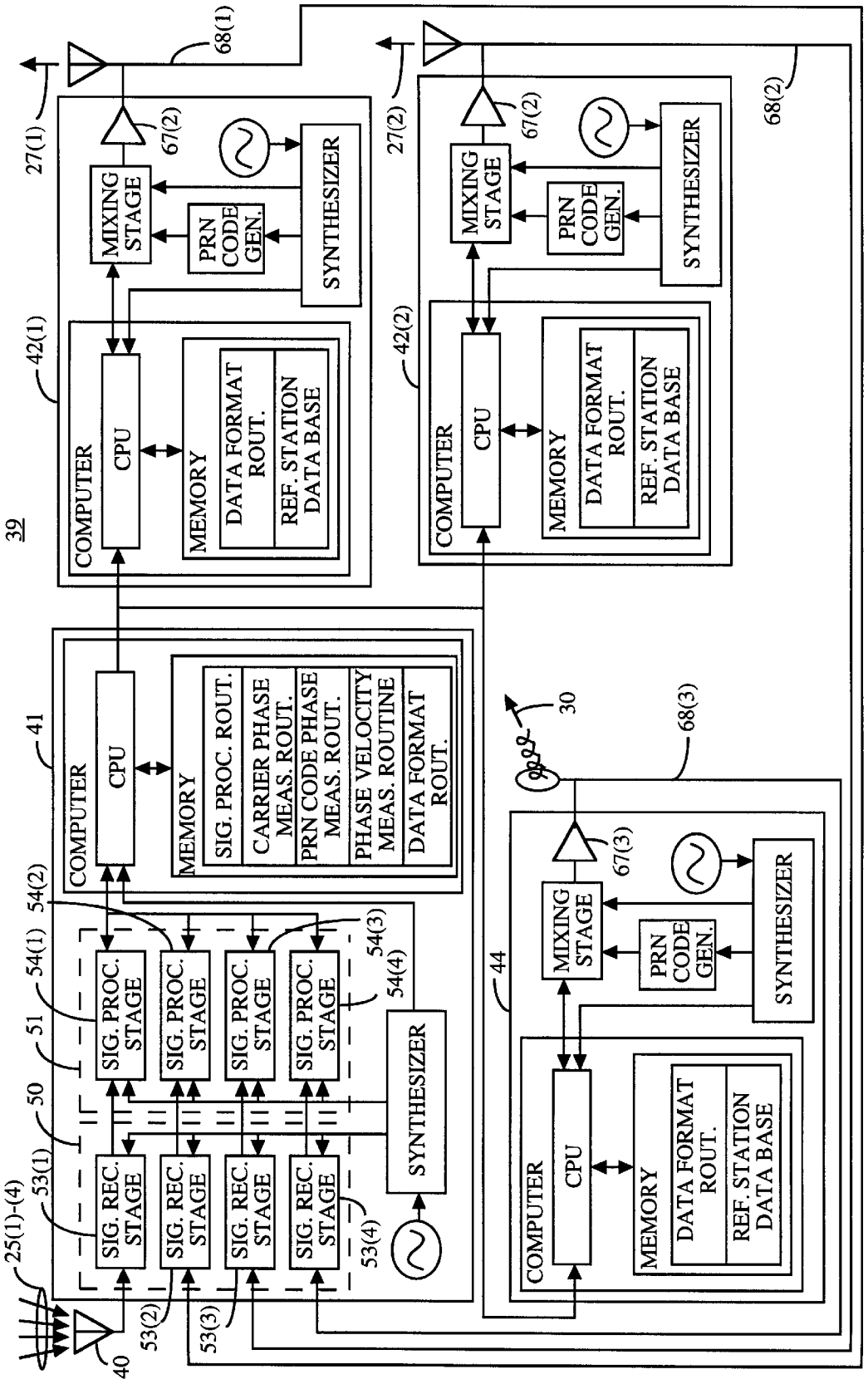
39
COMPUTER
CPU
MEMORY
DATA FORMAT ROUT.
REF. STATION DATA BASE
MIXING STAGE
PRN CODE GEN.
SYNTHESIZER
27(1)
27(2)
67(2)
68(1)
68(2)
42(1)
42(2)
41
SIG. PROC. ROUT.
CARRIER PHASE MEAS. ROUT.
PRN CODE PHASE MEAS. ROUT.
PHASE VELOCITY MEAS. ROUTINE
DATA FORMAT ROUT.
SIG. REC. STAGE
SIG. PROC. STAGE
25(1)-(4)
53(1)
53(2)
53(3)
53(4)
54(1)
54(2)
54(3)
54(4)
50
51
40
30
44
67(3)
68(3)

Figure 14

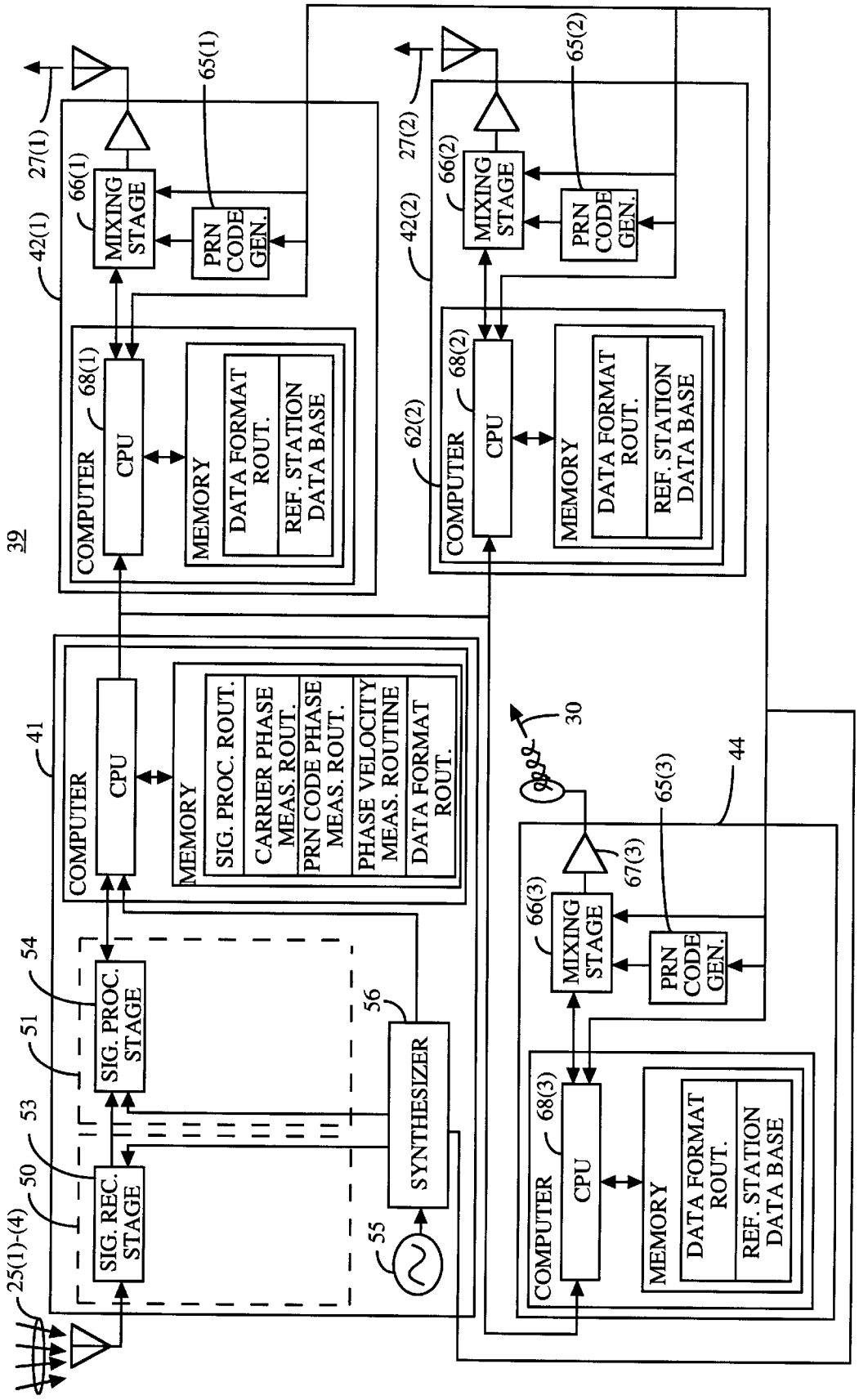
39
25(1)-(4)
50
53
51
54
SIG. REC. STAGE
SIG. PROC. STAGE
55
56
SYNTHESIZER
41
COMPUTER
CPU
MEMORY
SIG. PROC. ROUT.
CARRIER PHASE MEAS. ROUT.
PRN CODE PHASE MEAS. ROUT.
PHASE VELOCITY MEAS. ROUTINE
DATA FORMAT ROUT.
42(1)
COMPUTER
68(1)
CPU
MEMORY
DATA FORMAT ROUT.
REF. STATION DATA BASE
66(1)
MIXING STAGE
PRN CODE GEN.
65(1)
27(1)
42(2)
COMPUTER
62(2)
68(2)
CPU
MEMORY
DATA FORMAT ROUT.
REF. STATION DATA BASE
66(2)
MIXING STAGE
PRN CODE GEN.
65(2)
27(2)
30
44
COMPUTER
68(3)
CPU
MEMORY
DATA FORMAT ROUT.
REF. STATION DATA BASE
66(3)
MIXING STAGE
PRN CODE GEN.
65(3)
67(3)

Figure 15

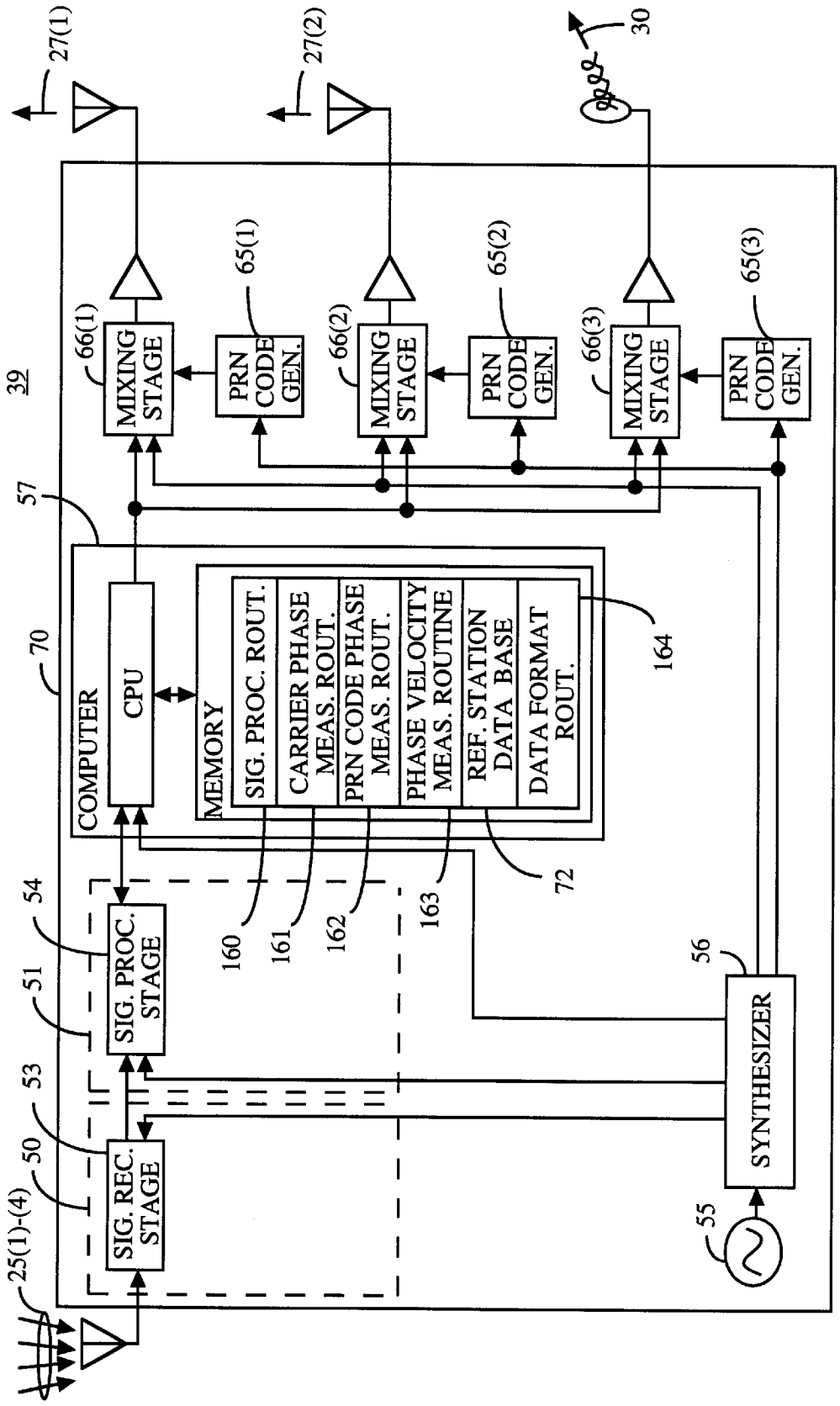
27(1)
27(2)
30
39
66(1)
MIXING STAGE
65(1)
PRN CODE GEN.
66(2)
MIXING STAGE
65(2)
PRN CODE GEN.
66(3)
MIXING STAGE
65(3)
PRN CODE GEN.
57
70
COMPUTER
CPU
MEMORY
SIG. PROC. ROUT.
CARRIER PHASE MEAS. ROUT.
PRN CODE PHASE MEAS. ROUT.
PHASE VELOCITY MEAS. ROUTINE
REF. STATION DATA BASE
DATA FORMAT ROUT.
164
160
161
162
163
72
54
SIG. PROC. STAGE
51
53
50
SIG. REC. STAGE
25(1)-(4)
56
SYNTHESIZER
55

Figure 16

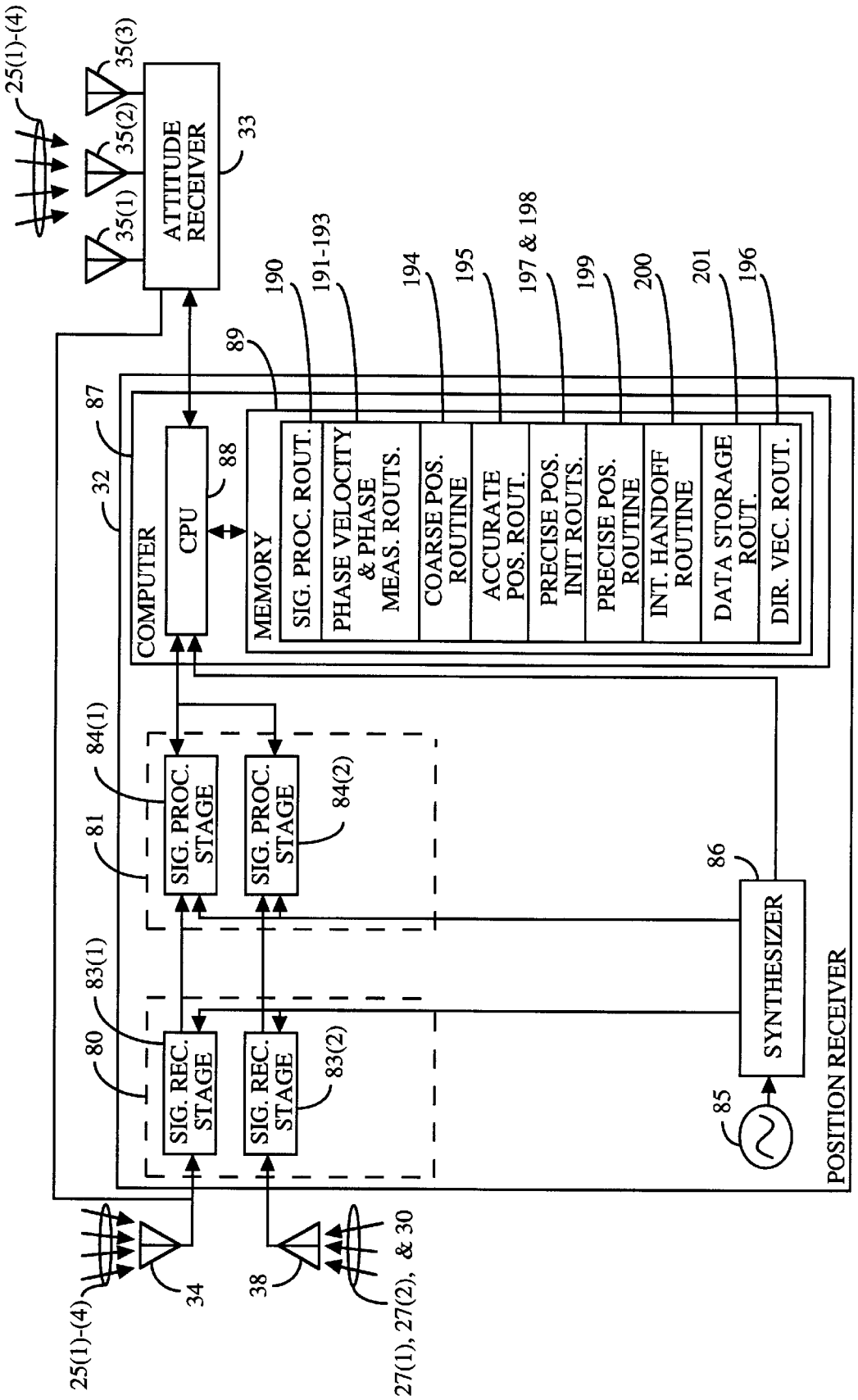
25(1)-(4)
35(1)
35(2)
35(3)
ATTITUDE RECEIVER
33
COMPUTER
32
87
CPU
88
89
MEMORY
190
SIG. PROC. ROUT.
191-193
PHASE VELOCITY & PHASE MEAS. ROUTS.
194
COARSE POS. ROUTINE
195
ACCURATE POS. ROUT.
197 & 198
PRECISE POS. INIT ROUTS.
199
PRECISE POS. ROUTINE
200
INT. HANDOFF ROUTINE
201
DATA STORAGE ROUT.
196
DIR. VEC. ROUT.
84(1)
SIG. PROC. STAGE
84(2)
SIG. PROC. STAGE
81
83(1)
SIG. REC. STAGE
83(2)
SIG. REC. STAGE
80
86
SYNTHESIZER
85
POSITION RECEIVER
25(1)-(4)
34
38
27(1), 27(2), & 30

Figure 17

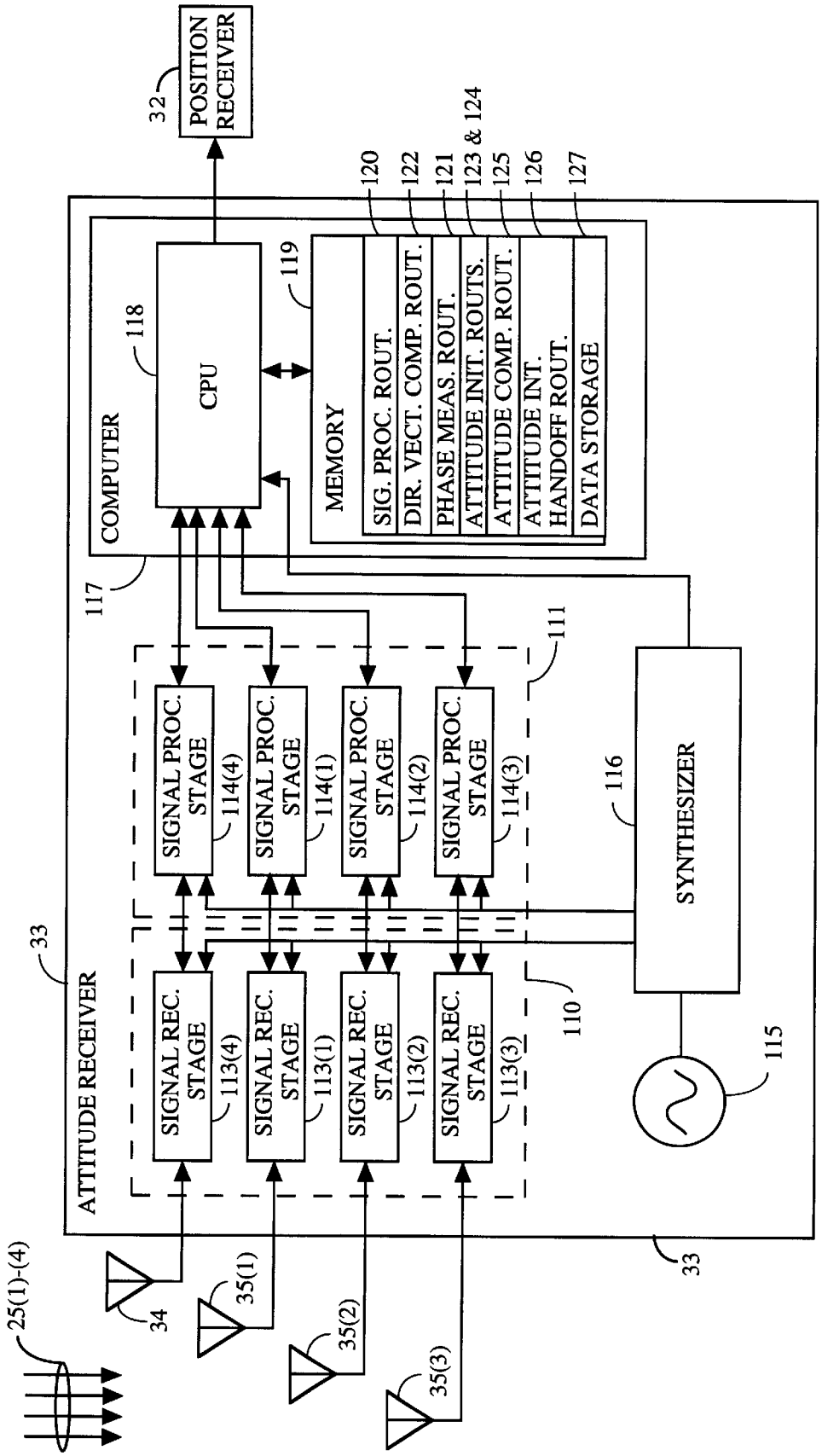
POSITION RECEIVER
32
COMPUTER
117
CPU
118
MEMORY
119
SIG. PROC. ROUT.
DIR. VECT. COMP. ROUT.
PHASE MEAS. ROUT.
ATTITUDE INIT. ROUTS.
ATTITUDE COMP. ROUT.
ATTITUDE INT. HANDOFF ROUT.
DATA STORAGE
120
122
121
123 & 124
125
126
127
ATTITUDE RECEIVER
33
SIGNAL PROC. STAGE
114(4)
114(1)
114(2)
114(3)
SIGNAL REC. STAGE
113(4)
113(1)
113(2)
113(3)
111
110
SYNTHESIZER
116
115
25(1)-(4)
34
35(1)
35(2)
35(3)

Figure 18

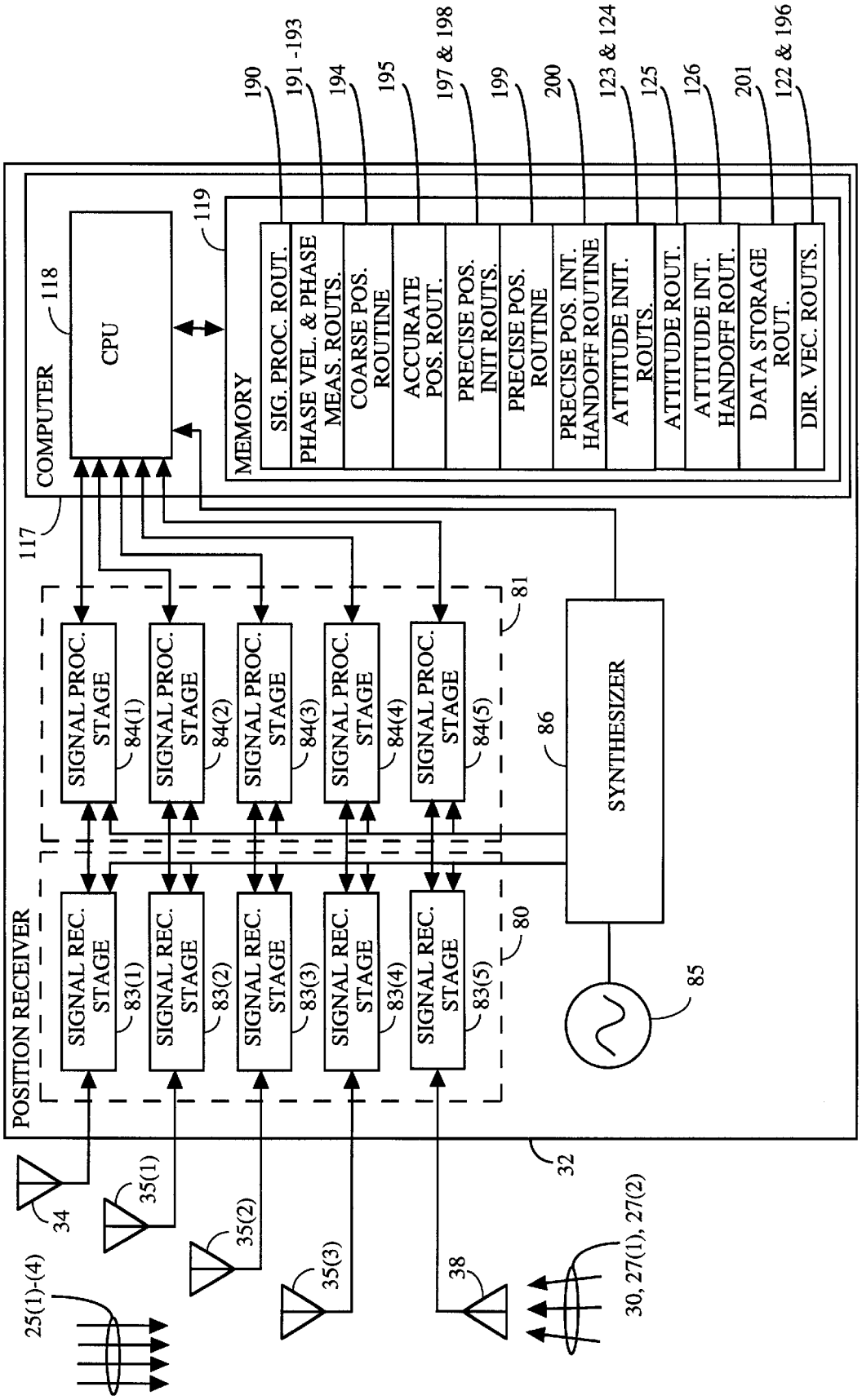
COMPUTER
118
CPU
117
119
MEMORY
190
SIG. PROC. ROUT.
191 -193
PHASE VEL. & PHASE MEAS. ROUTS.
194
COARSE POS. ROUTINE
195
ACCURATE POS. ROUT.
197 & 198
PRECISE POS. INIT ROUTS.
199
PRECISE POS. ROUTINE
200
PRECISE POS. INT. HANDOFF ROUTINE
123 & 124
ATTITUDE INIT. ROUTS.
125
ATTITUDE ROUT.
126
ATTITUDE INT. HANDOFF ROUT.
201
DATA STORAGE ROUT.
122 & 196
DIR. VEC. ROUTS.
POSITION RECEIVER
SIGNAL PROC. STAGE
84(1)
84(2)
84(3)
84(4)
84(5)
81
SIGNAL REC. STAGE
83(1)
83(2)
83(3)
83(4)
83(5)
80
SYNTHESIZER
86
85
32
34
35(1)
35(2)
35(3)
38
25(1)-(4)
30, 27(1), 27(2)

Figure 19

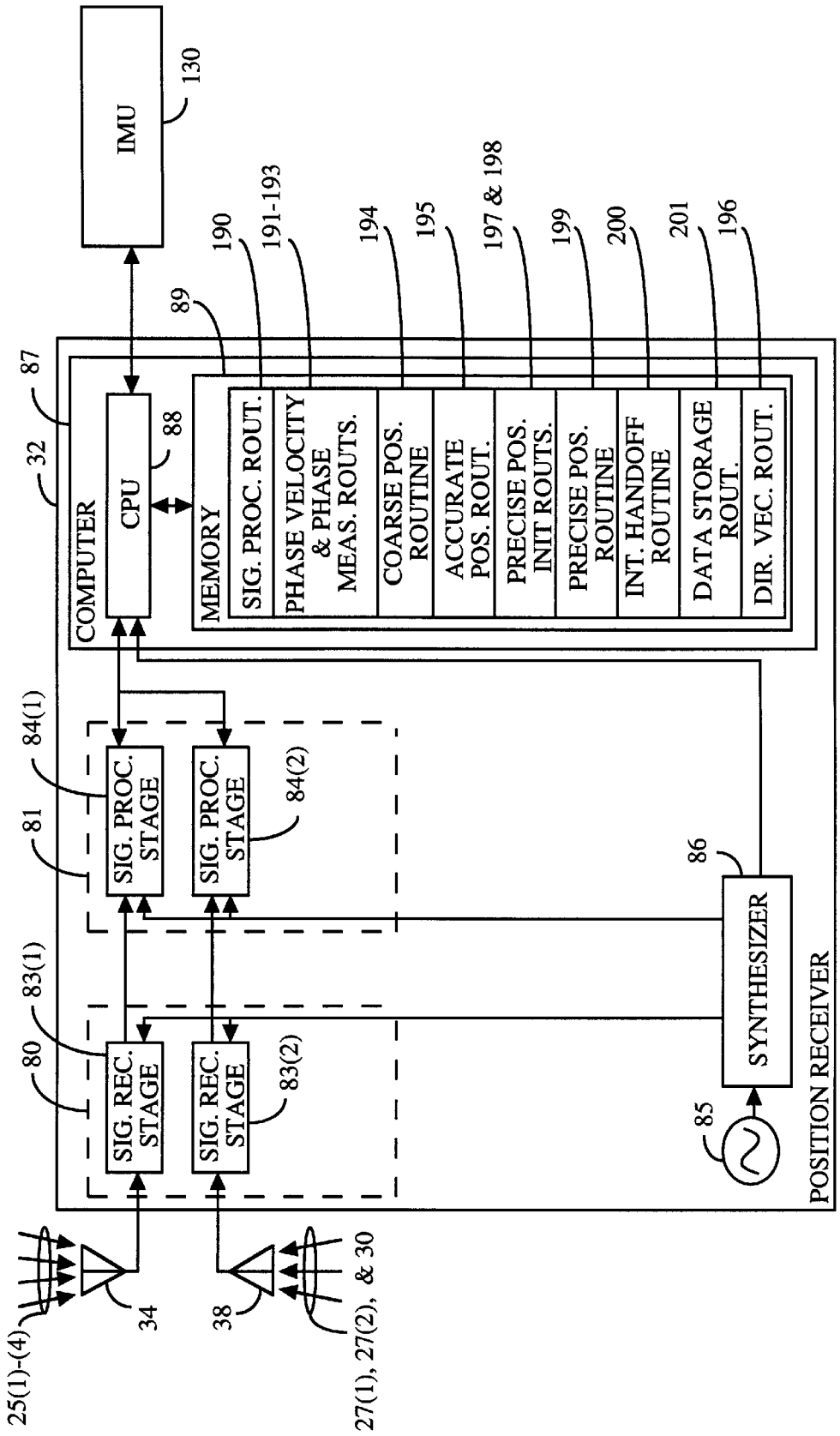
IMU
130
COMPUTER
32
87
CPU
88
MEMORY
89
190
SIG. PROC. ROUT.
191-193
PHASE VELOCITY & PHASE MEAS. ROUTS.
194
COARSE POS. ROUTINE
195
ACCURATE POS. ROUT.
197 & 198
PRECISE POS. INIT ROUTS.
199
PRECISE POS. ROUTINE
200
INT. HANDOFF ROUTINE
201
DATA STORAGE ROUT.
196
DIR. VEC. ROUT.
84(1)
SIG. PROC. STAGE
84(2)
SIG. PROC. STAGE
81
83(1)
SIG. REC. STAGE
83(2)
SIG. REC. STAGE
80
86
SYNTHESIZER
85
POSITION RECEIVER
25(1)-(4)
34
38
27(1), 27(2), & 30

Figure 20

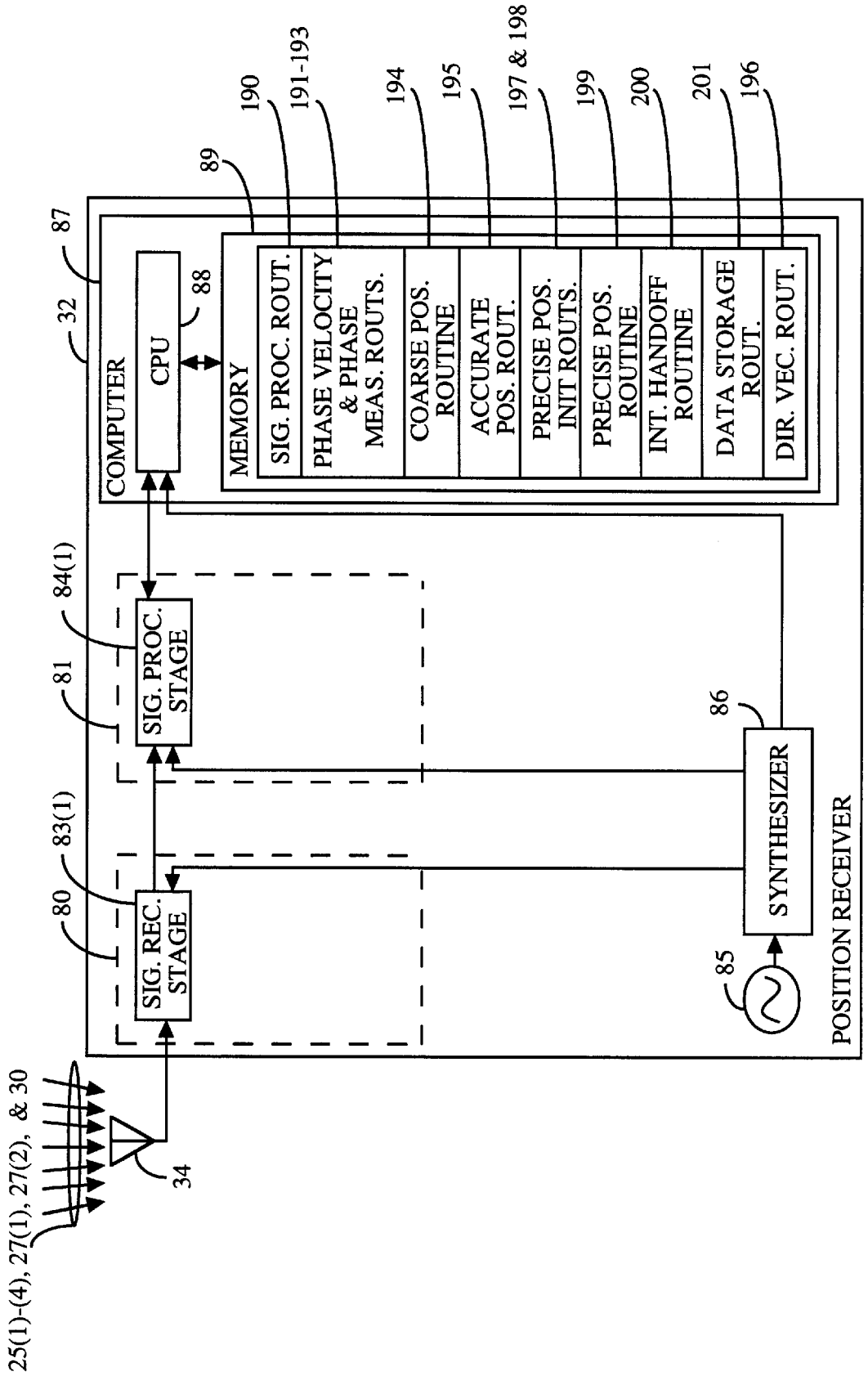
25(1)-(4), 27(1), 27(2), & 30
34
80
83(1)
SIG. REC. STAGE
81
84(1)
SIG. PROC. STAGE
32
87
COMPUTER
CPU
88
89
MEMORY
190
SIG. PROC. ROUT.
191-193
PHASE VELOCITY & PHASE MEAS. ROUTS.
194
COARSE POS. ROUTINE
195
ACCURATE POS. ROUT.
197 & 198
PRECISE POS. INIT ROUTS.
199
PRECISE POS. ROUTINE
200
INT. HANDOFF ROUTINE
201
DATA STORAGE ROUT.
196
DIR. VEC. ROUT.
85
86
SYNTHESIZER
POSITION RECEIVER

Figure 21

SYSTEM AND METHOD FOR GENERATING PRECISE POSITION DETERMINATIONS

Matter enclosed in heavy brackets [ ] appears in the original patent but forms no part of this reissue specification; matter printed in italics indicates the additions made by reissue.

This is a continuation, of application Ser. No. 08/410,011 filed Mar. 22, 1995, now abandoned, which is a continuation, of application Ser. No. 08/036,319 filed Mar. 24, 1993, now abandoned.

FIELD OF THE INVENTION

The present invention relates generally to systems and methods for generating precise position determinations for any land, sea, air, or space vehicle. In particular, it pertains to aircraft landing systems and methods.

BACKGROUND OF THE INVENTION

There has traditionally been a need for systems and methods which allow a user to make extremely precise position determinations. In fact, a number of attempts have been made at developing these kinds of systems and methods. However, they all suffer from serious problems which render them unfeasible or inaccurate.

This is particularly true in the case of aircraft landing systems and methods. The current system, the Instrument Landing System (ILS), was developed decades ago and is very expensive to install and maintain.

A proposed alternative to ILS is the Microwave Landing System (MLS). It however is also expensive to install and maintain.

Other proposed alternatives are based on the Global Positioning System (GPS). GPS involves a constellation of 24 satellites placed in orbit about the earth by the United States Department of Defense. Each satellite continuously broadcasts a GPS signal. This GPS signal contains an L-band carrier component (L1) transmitted at a frequency of 1.575 GHz. The L1 carrier component is modulated by a coarse acquisition (C/A) pseudo random (PRN) code component and a data component.

The PRN code provides timing information for determining when the GPS signal was broadcast. The data component provides information such as the satellite's orbital position. The carrier component allows a receiver to easily acquire the GPS signal.

Position determination using Conventional GPS is well known in the art. In Conventional GPS, a receiver makes ranging measurements between an antenna coupled to the receiver and each of at least four GPS satellites in view. The receiver makes these measurements from the timing information and the satellite orbital position information obtained from the PRN code and data components of each GPS signal received. By receiving four different GPS signals, the receiver can make fairly accurate position determinations.

However, Conventional GPS only allows a user to determine his actual location to within tens of meters. In applications such as aircraft landings, position accuracies of one foot must be achieved. Therefore, conventional GPS is not suitable for these applications.

A more accurate version of OPS is Ordinary Differential GPS. Position determination using Ordinary Differential GPS is also well known in the art. It involves the same kind of ranging measurements as are made with Conventional GPS, except that a ground reference receiver at a precisely

known location is utilized. Ideally, satellite ranging errors will affect the position determinations made by the user's receiver in the same way as they will the position determinations made by the nearby ground receiver. Since the location of the ground receiver is already known, the ground receiver can compare the position determination it has calculated with the actual known position. As a result, the ground receiver can accurately detect ranging errors.

From these errors, the ground receiver can compute suitable corrections which are transmitted by data link to the user's receiver. The user's receiver can then apply the corrections to its own ranging measurements so as to provide accurate real time position determinations.

Also, a pseudolite (i.e. ground based pseudo satellite) can be used to transmit these error corrections along with an unassigned PRN code. The unassigned PRN code enables the user's receiver to make a redundant fifth ranging measurement for even greater precision. And, in some cases, it enables the user's receiver to make a necessary fourth ranging measurement where one of the other GPS signals has been lost.

However, even with Ordinary Differential GPS, the position determinations are only accurate to within several meters. Since, as indicated earlier, aircraft landing systems must be accurate to within a foot, Ordinary Differential GPS by itself is not suitable for such an application.

An extremely accurate form of GPS is Carrier Phase Differential GPS. This form of OPS utilizes the 1.575 GHz carrier component of the GPS signal on which the PRN code and the data component are superimposed.

Carrier Phase Differential GPS involves generating position determinations based on the measured phase differences at two different antennas for the carrier component of a GPS signal. However, this technique initially requires determining how many integer wavelengths of the carrier component exist between the two antennas at a particular point in time. This is called integer ambiguity resolution.

A number of approaches currently exist for integer ambiguity resolution. However, all of them suffer from serious problems which render them unfit for precise position determinations in applications such as a aircraft landing.

One approach is Integer Searching using redundant measurements. This involves receiving more than the standard four GPS signals in order to sort out the correct combination of integer ambiguities. The different combinations of integer candidates are systematically checked against a cost function until an estimated correct set is found. However, for antenna separations of just a few meters, the checked combinations can number in the hundreds of millions. As a result, this approach has a propensity to arrive at wrong solutions. Furthermore, the configuration of the constellation of GPS satellites can only guarantee that four satellites will be in view at any given time. Therefore, any application requiring precise position determinations at any given time must not rely on redundant satellites for reliable resolution of the integer ambiguities.

Another approach is Narrow Correlator Spacing. This technique involves using the PRN code of the GPS signal to bound the integer ambiguities. However, a significant amount of the time it can yield position determination errors of as much as several meters. This does not provide the kind of consistency which is required in aircraft landing applications.

Still another approach is Dual Frequency Wide-Laning. This approach also utilizes a second GPS signal broadcast by each satellite. This second GPS signal has an L-band

carrier component (L2) transmitted at a frequency of 1.227 GHz. The L2 carrier component and the L1 carrier component are differenced so as to form a signal having an effective wavelength that is much longer than either of the two carrier components. From this signal, it is relatively easy to resolve the integer ambiguities. However, the L2 component is not available for civilian use. Although the denial of the second carrier component can be countermeasured with cross correlation technology, the performance of this type of technology is unproven and very expensive to implement.

One successful approach to integer ambiguity resolution is motion-based and has been utilized in static surveying applications. This approach involves taking a number of phase measurements while the user's antenna and the reference antenna are stationary. These phase measurements are made over a period of about 15 minutes. The phase measurements made during the slowly changing geometry of the GPS satellites will reveal the integer ambiguities. But, in many situations in which precise position determinations are required, such as aircraft landing, it would be impractical to require the user's antenna to remain stationary for 15 minutes while the integer ambiguities are resolved.

Another motion-based approach has been used for aircraft attitude determination. It involves placing an antenna on the tail, on the fuselage, and on each wing tip. The antenna on the fuselage serves as the reference antenna. The integer ambiguities can be resolved in seconds by rotating the aircraft and taking several phase measurements. Taking the phase measurements during this rapid change in geometry with respect to the slowly changing GPS satellite geometry will reveal the integer ambiguities. However, since the reference antenna and the other antennas are fixed to the aircraft, this approach is limited to attitude determinations and is not suitable for precise position determinations for the aircraft itself.

OBJECTS OF THE INVENTION

It is an object of the invention to provide a complete GPS system and method for making precise position determinations to within centimeters of the exact location.

It is another object of the invention to provide a mobile GPS system used in conjunction with a reference GPS system for making precise position determinations to within centimeters of the exact location.

It is further an object of the invention to provide a reference GPS system used in conjunction with a mobile GPS system for making precise position determinations to within centimeters of the exact location.

It is another object of the invention to provide a mobile GPS position receiver capable of making GPS position determinations to within centimeters of the exact location.

It is another object of the invention to provide a mobile GPS receiver capable of precise GPS attitude determinations, coarse GPS position determinations to within meters for navigation, and precise GPS position determinations to within centimeters for landing.

It is further an object of the invention to provide a ground based GPS reference transceiver capable of supplying a mobile GPS position receiver with the information necessary for making precise GPS position determinations to within centimeters of the exact location.

SUMMARY OF THE INVENTION

The foregoing and other objects of the invention may generally be achieved by a GPS system and method which employs Carrier Phase Differential GPS. The system and method utilize a ground based reference GPS system and a mobile CPS system mounted on a moving vehicle.

The elements of the reference system are stationary. They include a GPS reference receiver, an initialization pseudolite, a data link pseudolite, and a reference antenna.

The data link pseudolite generates and broadcasts a data link signal in the form of a signal beam. This data link signal has at least a carrier component and data component.

The initialization pseudolite generates and broadcasts an initialization signal in the form of a low power signal bubble. The initialization signal has at least a carrier component.

The reference antenna receives GPS signals broadcast by GPS satellites and provides them to the reference receiver. The reference receiver makes phase measurements at periodic measurement epochs for the carrier components of the GPS signals and may do the same, depending on the configuration of the reference GPS system, for the carrier component of the initialization signal. Data representing these phase measurements is received by the data link pseudolite and broadcast to the mobile system via the data component of the data link signal.

The elements of the mobile system are mounted on the moving vehicle and are therefore mobile. The mobile system includes a GPS position receiver and two antennas.

The first antenna receives the same GPS signals as were received by the reference antenna. This is done both during and after an initialization period.

The second antenna receives the initialization and data link signals broadcast by the two pseudolites during the initialization period. After the initialization period is over, the second antenna only receives the data link pseudolite signal.

Each of the GPS signals received by the first antenna and the reference antenna has an integer ambiguity associated with these two antennas. The initialization period is used to resolve these integer ambiguities so that the mobile GPS position receiver can generate subsequent precise position determinations for the first antenna using Carrier Phase Differential GPS.

During the initialization period, the GPS position receiver receives from the first antenna the CPS signals and from the second antenna the initialization and data link signals. While the moving vehicle is within the signal bubble and receives the initialization signal, there is a large angular change in geometry between the moving vehicle and the initialization pseudolite as the vehicle moves through the signal bubble.

The mobile GPS position receiver makes and records phase measurements for the GPS signals and the initialization signal over this large angular change in geometry. These phase measurements are made at the same epochs as those made by the GPS reference receiver over this same change in geometry. Furthermore, the mobile GPS receiver receives via the data link signal the phase measurements made by the GPS reference receiver and records them. From the recorded phase measurements of both receivers, the GPS position receiver can accurately compute initialization values representing resolutions of the integer ambiguities of the GPS signals. Thus, the large angular change in geometry reveals the integer ambiguities.

Once these initialization values have been computed, the initialization period is over and the moving vehicle will have left the signal bubble. The mobile GPS receiver can then compute precise positions for the first antenna at each

measurement epoch to within centimeters of the exact location. This is done using the computed initialization values, the phase measurements for the GPS signals made by the mobile position receiver, and the phase measurements made by the GPS reference receiver provided to the GPS position receiver via the data link signal.

BRIEF DESCRIPTION OF THE DRAWINGS

The foregoing and other objects of the invention will become more apparent on reading the following detailed description and upon reference to the drawings, in which:

FIG. **1** shows a general view of a GPS system which employs two initialization pseudolites in accordance with the invention;

FIG. **2** shows a more detailed view of the GPS system shown in FIG. **1**;

FIG. **3** provides an illustration of how integer ambiguities at an initial epoch arise which are then resolved during an initialization period required for generating precise position determinations;

FIG. **4** provides an illustration of the integer ambiguities at an epoch after the initial epoch;

FIG. **5** shows the vector relationships associated with the integer ambiguities shown in FIGS. **3** and **4**;

FIG. **6** shows the vectors representing the surveyed positions of antennas which are mounted on an airplane with respect to the body coordinate system of the airplane;

FIG. **7** shows the rotation of the body coordinate system of the airplane with respect to the runway coordinate system;

FIG. **8** shows a general view of a GPS system employing a single initialization pseudolite in accordance with the invention;

FIG. **9** illustrates elimination of cross track uncertainty by use of two initialization pseudolites;

FIG. **10** illustrates elimination of cross track error by overlying a single initialization pseudolite twice;

FIG. **11** provides an illustration of the vector relationships associated with the integer ambiguities which are resolved during an initialization period required for generating precise GPS attitude determinations;

FIG. **12** shows rotation of the attitude antennas about a single axis of the runway coordinate system during the initialization period required for GPS attitude determinations;

FIG. **13** shows a detailed description of a ground base GPS reference system which is part of the entire GPS system of FIG. **1** and which employs two initialization pseudolites;

FIG. **14** shows an alternative embodiment for the GPS reference system where pseudolite signals are received directly by a reference receiver from pseudolite signal generators;

FIG. **15** shows another embodiment for the GPS reference system where the GPS reference receiver and the pseudolite signal generators share a common synthesizer;

FIG. **16** shows yet another embodiment for the GPS reference system where the GPS reference receiver and the pseudolite signal generators are combined into a single GPS reference transceiver;

FIG. **17** provides a detailed illustration of a portion of a GPS mobile system which is part of the entire GPS system of FIG. **1** and which includes a GPS position receiver and several antennas;

FIG. **18** provides a detailed illustration of another portion of the GPS mobile system including a GPS attitude receiver and several antennas;

FIG. **19** shows another embodiment of the GPS mobile system where a single GPS receiver generates both position determinations and attitude determinations;

FIG. **20** shows another embodiment of the GPS mobile system where an inertial measurement unit is employed;

FIG. **21** shows another embodiment for the GPS mobile system where a single antenna and a single GPS position receiver are employed.

DETAILED DESCRIPTION OF THE INVENTION

FIGS. **1–21** provide illustrations of the invention described herein. In these figures, like components are designated by like numerals.

DETAILED DESCRIPTION OF SYSTEM AND METHOD

FIG. **1** shows a general view of a GPS system **20** for generating precise position determinations using Carrier Phase Differential GPS. An airplane **21** is on final approach trajectory **22** to runway **23**. Four GPS satellites **24(1)–(4)** at known orbital positions are in view and broadcast GPS signals **25(1)–(4)**. Initialization pseudolites **26(1)–(2)** are located at known positions on each side of the horizontal component of flight trajectory **22** and respectively generate and broadcast initialization signals **27(1)–(2)** in the form of a low power signal bubbles **28(1)–(2)**. A data and ranging link pseudolite **29** is located at a known position at the end of runway **22** and broadcasts a data link signal **30** in the form of a signal beam **31**. As shown, Airplane **21** is initially outside of signal bubbles **28** but within signal beam **31**.

FIG. **2** shows GPS system **20** while airplane **21** is inside GPS signal bubbles **28(1)–(2)**. Mounted on airplane **21** is GPS mobile system **37** which includes GPS position receiver **32**, GPS attitude receiver **33**, GPS top side antenna **34**, GPS attitude antennas **35(1)–(3)**, and GPS bottom side antenna **38**. Each of the components **32–34**, **35(1)–(3)**, and **38** of the GPS mobile system **37** is mobile. Furthermore, each of the antennas **34** and **35(1)–(3)** receives GPS signals **25(1)–(4)** and is coupled to position receiver **32**. Antenna **38** receives pseudolite signals **27(1)–(2)** and **30** and is also coupled to receiver **32**.

Located near runway **23** is a ground based GPS reference system **39**. It includes reference GPS antenna **40**, stationary reference GPS receiver **41**, and pseudolites **26(1)–(2)** and **29**. Reference antenna **40** receives GPS signals **25(1)–(4)**, initialization signals **27(1)–(2)**, and data link signal **30**. Reference receiver **41** is coupled to reference antenna **40** for receiving these signals. Pseudolites **26(1)–(2)** respectively comprise signal generators **42(1)–(2)** and pseudolite transmit antennas **43(1)–(2)**. The signal generators **42(1)–(2)** are respectively coupled to antennas **43(1)–(2)** and respectively generate pseudolite signals **27(1)–(2)** while antennas **43(1)–(2)** respectively broadcast these signals. Pseudolite **29** comprises signal generator **44** and pseudolite transmit antenna **45**. Signal generator **44** is coupled to antenna **45** and generates pseudolite signal **30** while antenna **45** broadcasts this signal. Reference antenna **40**, reference receiver **41**, and pseudolite antennas **43(1)–(2)** and **45** are at precisely surveyed locations with respect to each other and runway **23**.

The GPS signals **25(1)–(4)** are L1 C/A code GPS signals. In other words, they contain an L1 carrier component, a C/A PRN code, and a data component. In the preferred embodiment, the initialization signals **27(1)–(2)** and the data link signal **30** are L1 C/A GPS type signals in order to utilize

existing GPS technology and methodology. However, the signals **27(1)–(2)** and **30** need not be limited to L1 CIA GPS signals. In fact, the pseudolite signal **30** need only provide a data link between the reference system **39** and the mobile receiver **32**. Thus, it could simply comprise a carrier component (with a frequency in the L-band or otherwise) and a data component. Furthermore, the pseudolite signals **27(1)–(2)** need only provide receiver **32** with a carrier signal. Thus, they could simply comprise a carrier signal (with a frequency in the L-band or otherwise).

The L1 carrier is a sinusoidal wave transmitted at a frequency of 1.575 GHz. In the preferred embodiment, the L1 carrier signal allows the position receiver **32** and the reference receiver **41** to easily acquire the GPS signals **25(1)–(4)**, **27(1)–(2)**, and **29**. And, as is discussed later, it also allows the position receiver **32** to compute precise position determinations for airplane **21** using Carrier Phase Differential GPS.

The PRN code provides timing information enabling the position receiver **32** to make Conventional GPS and Ordinary Differential GPS position determinations. It comprises a series of variable width pulses broadcast at a frequency of 1.023 MHz. Each of the GPS satellites **24(1)–(4)** and the pseudolites **26(1)–(2)** and **29** transmits its own unique PRN code. This enables position receiver **32** and reference receiver **41** to easily identify and separate the various GPS signals received by the two receivers.

The position receiver **32** and the reference receiver **41** generate internally the same PRN codes at substantially the same time as do GPS satellites **24(1)–(4)** and pseudolites **26(1)–(2)** and **29**. The receivers **32** and **41** compare the PRN codes that they generate with the corresponding PRN codes received from the GPS satellites **24(1)–(4)** and the pseudolites **26(1)–(2)** and **29**. The phase difference needed to match the received and generated PRN codes is then computed in terms of time.

The computed phase difference represents the time it takes for the PRN code of the broadcasting GPS satellite **24(1)–(4)** or pseudolite **26(1)–(2)** or **29** to travel to the antenna **34**, **35(1)–(3)**, **38** or **40** which has received the PRN code. From the measured phase difference, the range to the broadcasting GPS satellite **24(1)–(4)** or pseudolite **26(1)–(2)** or **29** can be established. With ranging measurements to the four different GPS satellites **24(1)–(4)**, position determinations using Conventional GPS can be made by receiver **32** to within tens of meters. With additional ranging measurements to pseudolites **26(1)–(2)** or **29**, and with data furnished by receiver **41** and broadcast by pseudolites **26(1)–(2)** or **29** in the respective data components of GPS signals **27(1)–(2)** or **30**, accurate position determinations can be made using Ordinary Differential GPS to within several meters.

The data component of each of the GPS signals **25(1)–(4)** broadcast by the GPS satellites **24(1)–(4)** respectively, when considered alone by the position receiver **32**, only contains enough information for enabling the position receiver **32** to make Conventional GPS position determinations. However, when the position receiver **32** also considers the data component of GPS signals **27(1)–(2)** or **30**, it can make Ordinary Differential GPS and Carrier Phase Differential GPS position determinations.

The information in the data component of each GPS signal **25(1)–(4)** includes the orbital position of the GPS satellite **24(1)–(4)** which has broadcast it. This information is provided as a bit stream with a frequency of 50 bits per second. The information in the data component of the pseudolite GPS signals **27(1)–(2)** or **30** can include (a) the position of pseudolites **26(1)–(2)** and **29**, (b) the position of antenna **40**, (c) the position of reference receiver **41**, (d) corrective information computed by reference receiver **41**, (c) the raw carrier phase measurements and PRN code measurements made by reference receiver **41** for the GPS signals **25(1)–(4)**, **27(1)–(2)**, and **30**, and (g) important runway and airport status information. All of this information is broadcast as a bit stream with a frequency of approximately 1000 bits per second.

As indicated earlier, FIG. **1** shows airplane **21** approaching runway **23** outside of the signal bubbles **28(1)–(2)**. While outside the signal bubbles **28(1)–(2)**, position receiver **32** makes position determinations using Ordinary Differential GPS from the information supplied by GPS signal **30**. This is done to provide proper navigation during an initialization period. During the initialization period, position receiver **32** is initialized for Carrier Phase Differential GPS position determinations.

The initialization of position receiver **32** involves integer ambiguity resolution. Integer ambiguity resolution is the process of determining, at a particular point in time, the number of integer wavelengths of the carrier component of a GPS signal **25(1)–(4)**, **27(1)–(2)**, or **30** which lies between a given pair of antennas in the direction of the broadcasting GPS satellite **24(1)–(4)** or pseudolite **26(1)–(2)** or **29**.

FIG. **3** provides an illustration of how three integer ambiguities $n_{25(i)}$, n_{30}, and $n_{27(k)}$ arise at the first measurement epoch of the initialization period.

GPS satellite **24**(i) (i.e. the ith of the GPS satellites **24(1)–(4)**) broadcasts with its transmit antenna a carrier component of GPS signal **25**(i) (i.e. the ith of the GPS signals **25(1)–(4)**) in the direction of antennas **34** and **40**. The integer ambiguity $n_{25(i)}$ of GPS signal **25**(i) is associated with top side antenna **34** and reference antenna **40**.

Ranging link pseudolite **29** broadcasts with its pseudolite antenna **45** a carrier component of GPS signal **30** in the direction of antennas **34** and **40**. The integer ambiguity n_{30} of GPS signal **30** is associated with top side antenna **38** and reference antenna **40**.

Initialization pseudolite **26**(k) (i.e. the kth of the initialization pseudolites **26(1)–(4)**) broadcasts with its pseudolite antenna **43**(k) (i.e. the kth of pseudolite antennas **43(1)–(2)**) a carrier component of GPS signal **27**(k) (i.e. the kth of the GPS signals **27**) in the direction of antennas **38** and **40**. The integer ambiguity $n_{27(k)}$ of GPS signal **27**(k) is associated with top side antenna **34** and reference antenna **40**.

Both of the receivers **32** and **41** are configured to make phase measurements for the acquired GPS signals **25**(i)–(4), **27(1)–(2)**, and **30**. Each measurement includes both a fractional wavelength phase component Φ_{fr} and an integer wavelength phase change component Φ_{int}. The integer wavelength change in phase Φ_{int} for each raw phase measurement is kept track of by receiver **32** as of the time the GPS signals **25(1)–(4)**, **27(1)–(2)**, and **30** was first acquired. In the preferred embodiment, the phase measurements are made by the receivers **32** and **41** at a rate in the range of 1–10 Hz. Each cycle is a measurement epoch. This rate is selected so that the phase measurements of reference receiver **41** can be sampled and telemetered up to receiver **32** (via the pseudolite GPS signals **27(1)–(2)** or **30**) for synchronization with the sampled raw phase measurements of receiver **32**.

As mentioned previously, antennas **34** and **38** are coupled to position receiver **32** and antenna **41** is coupled to reference receiver **41**. Both position receiver **32** and reference receiver **41** generate internally their own carrier component

for phase comparisons with the received carrier component of GPS signals **25(1)–(4)**, **27(1)–(2)**, and **30**. These carrier components are not generated at exactly the same time because at each measurement epoch the receiver **32** has clock synchronization error ΔT_{32}, the reference receiver **41** has clock synchronization error ΔT_{41}, the signal generator of GPS satellite **24**(i) has a clock synchronization error $\Delta T_{24(i)}$, the signal generator **44** of the ranging link pseudolite **29** has synchronization error ΔT_{44}, and the signal generator **42**(k) (i.e. the kth of the signal generators **42(1)–(2)**) of initialization pseudolite **27**(k) has synchronization error $\Delta T_{42(k)}$.

As shown in FIG. **3**, the unknown range $r_{24(i)/34}$ between the transmit antenna of GPS satellite **24**(i) and antenna **34**, at the initial epoch of the initialization, includes the phase component $\Phi_{25(i)/34}$ measured by receiver **32** and the unknown integer component $n_{25(i)/34}$ of GPS signal **25**(i). The unknown range $r_{45/38}$ between the pseudolite antenna **45** and the antenna **38**, at the initial epoch of the initialization, includes the phase component $\Phi_{30/38}$ measured by receiver **32** and the unknown integer component $n_{30/38}$ of GPS signal **30**. And, the unknown range $r_{43(k)/38}$ between a pseudolite antenna **43**(k) and the antenna **38**, at the initial epoch of the initialization, includes the phase component $\Phi_{27(k)/38}$ measured by receiver **32** and the unknown integer component $n_{27(k)/38}$ for GPS signal **27**(k).

The unknown range $r_{24(i)/40}$ at the initial epoch between the transmit antenna of GPS satellite **24**(i) and antenna **40** includes the phase component $\Phi_{25(i)/40}$ measured by receiver **41** and the unknown integer component $n_{25(i)/40}$ of GPS signal **25**(i). The known range $r_{45/40}$ at the initial epoch between the pseudolite antenna **45** and antenna **40** includes the phase component $\Phi_{30/40}$ measured by receiver **41** and the unknown integer component $n_{30/40}$ of GPS signal **30**. The known range $r_{43(k)/40}$ at the initial epoch between a pseudolite antenna **43**(k) and antenna **40** includes the phase component $\Phi_{27(k)/40}$ measured by receiver **41** and the unknown integer component $n_{27(k)/40}$ of GPS signal **27**(k). The phase measurements $\Phi_{25(i)/40}$, $\Phi_{30/40}$, and $\Phi_{27(k)/40}$ are uplinked to receiver **32**.

The unknown integer components $n_{25(i)/34}$, $n_{30/38}$, $n_{27(k)/38}$, $n_{25(i)/40}$, $n_{30/40}$, and $n_{27(k)/40}$ which are assigned at the initial epoch remain constant throughout the initialization process and the subsequent Carrier Phase Differential GPS position determinations. This fact is illustrated in FIG. **4**.

FIG. **4** shows an epoch after the initial epoch. This second epoch could be during or after the initialization period. Each of the measurements $\Phi_{25(i)/34}$, $\Phi_{25(i)/40}$, $\Phi_{30/30}$, $\Phi_{30/40}$, $\Phi_{27(k)/38}$, and $\Phi_{27(k)/40}$ will have changed since the initial epoch. This is due to the fact that the fractional component Φ_{fr} and integer wavelength change component Φ_{int} which make up the identified phase measurements have changed since the initial epoch. However, the assigned integer components $n_{25(i)/34}$, $n_{30/38}$, $n_{27(k)/38}$, $n_{25(i)/40}$, $n_{30/40}$, and $n_{27(k)/40}$ have not changed.

The relationship between $\Phi_{25(i)/34}$ and $n_{25(i)/34}$ and the relationship between $\Phi_{25(i)/40}$ and $n_{25(i)/40}$ are provided as follows in Equations (1), and (2) respectively:

$$\Phi_{25(i)/34} = r_{25(i)/34} - n_{25(i)/34} + \Delta T_{32} - \Delta T_{24(i)} \quad (1)$$

$$\Phi_{25(i)/40} = r_{24(i)/40} - n_{25(i)/40} + \Delta T_{41} - \Delta T_{24(i)} \quad (2)$$

Equations (1) and (2) can be differenced so as to form the single difference phase relationship provided as follows in Equation (3):

$$\Phi_{25(i)} = \Phi_{25(i)/34} - \Phi_{25(i)/40} = r_{24(i)/34} - r_{24(i)/40} - n_{25(i)} + \Delta T_{32} - \Delta T_{41} \quad (3)$$

where $n_{25(i)}$ is the integer ambiguity between antennas **34** and **40** at the initial epoch for the carrier component of the GPS signal **25**(i) broadcast by GPS satellite **24**(i).

The relationship between $\Phi_{30/38}$ and $n_{30/38}$ and the relationship between $\Phi_{30/40}$ and $n_{30/40}$ are provided as follows in Equations (4), and (5) respectively:

$$\Phi_{30/38} = r_{45/38} - n_{30/38} + \Delta T_{32} - \Delta T_{44} \quad (4)$$

$$\Phi_{30/40} = r_{45/40} - n_{30/40} + \Delta T_{41} - \Delta T_{44} \quad (5)$$

Equations (4) and (5) can be differenced so as to form the single difference phase relationship provided as follows in Equation (6):

$$\Phi_{30} = \Phi_{30/38} - \Phi_{30/40} = r_{45/38} - r_{45/40} - n_{30} + \Delta T_{32} - \Delta T_{41} \quad (6)$$

where n_{30} is the integer ambiguity between antennas **38** and **40** at the initial epoch for the carrier component of the GPS signal **30** broadcast by pseudolite antenna **45** of ranging link pseudolite **29**.

The relationship between $\Phi_{27(k)/38}$ and $n_{27(k)/38}$ and the relationship between $\Phi_{27(k)/40}$ and $n_{27(k)/40}$ are provided as follows in Equations (7), and (8) respectively:

$$\Phi_{27(k)/38} = r_{43(k)/38} - n_{27(A)/38} + \Delta T_{32} - \Delta T_{42(k)} \quad (7)$$

$$\Phi_{27(k)/40} = r_{43(k)/40} - n_{27(k)/40} + \Delta T_{41} - \Delta T_{42(k)} \quad (8)$$

Equations (7) and (8) can be differenced so as to form the single difference phase relationship provided as follows in Equation (9):

$$\Phi_{27(k)} = \Phi_{27(k)/38} - \Phi_{27(k)/40} = r_{43(k)/38} - r_{43(k)/40} - n_{27(k)} + \Delta T_{32} - \Delta T_{41} \quad (9)$$

where $n_{27(k)}$ is the integer ambiguity between antennas **38** and **40** at the initial epoch for the carrier component of the GPS signal **27**(k) broadcast by pseudolite antenna **43**(k) of initialization pseudolite **26**(k).

In order to make proper position determinations for airplane **21** relative to the beginning of runway **23**, Equations (3), (6), and (9) must be manipulated so as to include the vector relationships t, x, y, $\hat{s}_{24(i)}$, $p_{43(k)}$, p_{45}, and $A^T k_{38}$ associated with the ranges $r_{24(i)/34}$, $r_{24(i)/40}$, $r_{45/38}$, $r_{45/40}$, $r_{43(k)/38}$, and $r_{43(k)/40}$. These relationships are shown in FIG. **5** and are established with respect to the runway coordinate system **46** associated with the threshold of runway **23**. Coordinate system **46** is defined by the along track AT, cross track CT, and altitude A coordinates.

The position of reference antenna **40** with respect to the runway **23** threshold is known and represented by the vector t which is provided as follows in Equation (12):

$$t = \begin{bmatrix} t_{AT} \\ t_{CT} \\ t_A \end{bmatrix} \quad (12)$$

where t_{AT}, t_{CT}, and t_A are respectively the along track distance between antenna **40** and the runway **23** threshold.

The position of top side antenna **34** with respect to the runway **23** threshold is unknown and represented by the vector x [3×1] provided as follows in Equation (13):

$$x = \begin{bmatrix} x_{AT} \\ x_{CT} \\ x_A \end{bmatrix} \tag{13}$$

where x_{AT}, x_{CT}, and x_A are respectively the along track, cross track, and altitude distances between antenna **34** and the runway **23** threshold.

The position of bottom side antenna **38** with respect to the runway **23** threshold is unknown and represented by the vector y [3×1] provided as follows in Equation (14):

$$y = \begin{bmatrix} y_{AT} \\ y_{CT} \\ y_A \end{bmatrix} \tag{14}$$

where y_{AT}, y_{CT}, and y_A are respectively the along track, cross track, and altitude distances between antenna **38** and the runway **23** threshold.

The known direction to GPS satellite **24**(i) relative to antenna **40** is represented by the unit direction vector $\hat{s}_{24(i)}$ [3×1] provided as follows in Equation (15):

$$\hat{s}_{24(i)} = \begin{bmatrix} \hat{s}_{24(i)/AT} \\ \hat{s}_{24(i)/CT} \\ \hat{s}_{24(i)/A} \end{bmatrix} \tag{15}$$

where $s_{24(i)/AT}$, $s_{24(i)/CT}$, $s_{24(i)A}$ are respectively the unit along track, cross track, and altitude distances to GPS satellite **24**(i). This vector is computed by receiver **32** for a GPS satellite **24**(i) from the satellite position information contained in the data component of its associated GPS signal **25**(i) and from the known position of antenna **40** in the coordinate system used to determine the positions of the GPS satellite **24**(i).

The known position of pseudolite antenna **45** of ranging link pseudolite **45** relative to reference antenna **40** is represented by the position vector p_{45} [3×1] provided as follows in Equation (16):

$$p_{25} = \begin{bmatrix} p_{45/AT} \\ p_{45/CT} \\ p_{45/A} \end{bmatrix} \tag{16}$$

where $p_{45/AT}$, $p_{45/CT}$, and $p_{45/A}$ are respectively the along track, cross track, and altitude distances between antenna **40** and pseudolite antenna **45**.

The known position of pseudolite antenna **43**(k) of the initialization pseudolite **26**(k) relative to reference antenna **40** is represented by the position vector $p_{43(k)}$ [3×1] provided as follows in Equation (17):

$$p_{43(k)} = \begin{bmatrix} p_{43(k)/AT} \\ p_{43(k)/CT} \\ p_{43(k)/A} \end{bmatrix} \tag{17}$$

where $p_{43(k)/AT}$, $p_{43(k)/CT}$, and $p_{43(k)A}$ are respectively the along track, cross track, and altitude distances between antenna **40** and pseudolite antenna **43**(k).

The vector $A^T k_{38}$ [3×1] is the lever arm correction vector needed for determining the unknown position vector x. It is the dot product of the transposed attitude matrix A[3×3] and the known position vector k_{38} [3×1] for the bottom side antenna **38** .

The known position of bottom side antenna **38** relative to top side antenna **34** is precisely surveyed with respect to the body coordinate system **47** defined by the coordinates X, Y, and Z and shown in FIG. **6**. This position is represented by vector k_{38} which is provided as follows in Equation (18):

$$k_{18} = \begin{bmatrix} k_{38/X} \\ k_{38/Y} \\ k_{38/Z} \end{bmatrix} \tag{18}$$

where $k_{38/X}$, $k_{38/Y}$ and $k_{38/Z}$ are respectively the distances between antennas **34** and **38** in the X, Y, and Z directions.

The attitude matrix A is known and can be determined from attitude solutions generated by attitude GPS receiver **33**. As shown in FIG. **7**, the matrix is established from the rotation of the body coordinate system **47** of airplane **21** with respect to the runway coordinate system **46**. This matrix is provided as follows in Equation (19):

$$A^T = \begin{bmatrix} A_{X/AT} & A_{Y/AT} & A_{Z/AT} \\ A_{X/CT} & A_{Y/CT} & A_{Z/CT} \\ A_{X/A} & A_{Y/A} & A_{Z/A} \end{bmatrix} \tag{19}$$

where each element of the matrix represents the rotation of a coordinate of the body coordinate system **47** with respect to a coordinate of the runway coordinate system **46**. As a result, the vector $A^T k_{38}$ represents the position of antenna relative to antenna **34** in the runway coordinate system **46**.

From the preceding vector relationships, the following mathematical relationships in Equations (20)–(25) may be established:

$$r_{24(i)/34} - r_{24(i)/40} = \hat{s}^T_{24(i)}(x - t) \tag{20}$$

$$r_{45/38} = |x - t + A^T k_{38} - p_{45}| \tag{21}$$

$$r_{45/40} = |p_{45}| \tag{22}$$

$$r_{43(k)/38} = |x - t + A^T k_{38} - p_{43(k)}| \tag{23}$$

$$r_{43(k)/40} = |p_{43(k)}| \tag{24}$$

$$y = x + A^T k_{38} \tag{25}$$

Equation (20) can be combined with Equation (3) to establish the single difference phase relationship provided in Equation (26):

$$\Phi_{25(i)} = \hat{s}^T_{24(i)}(x - t) - n_{25(i)} + \Delta T_{32} - \Delta T_{41} \tag{26}$$

Equations (21) and (22) can be combined with Equation (6) to establish the single difference phase relationship provided in Equation (27):

$$\Phi_{30} = |x - t + A^T k_{38} - p_{45}| - |p_{45}| - n_{30} + \Delta T_{32} - \Delta T_{41} \tag{27}$$

Equations (23) and (24) can be combined with Equation (9) to establish the single difference phase relationship provided in Equation (28):

$$\Phi_{27(k)} = |x - t + A^T k_{38} - p_{43(k)}| - |p_{43(k)}| - n_{27(k)} + \Delta T_{32} - \Delta T_{41} \quad (28)$$

In order to cancel out the clock synchronization errors ΔT_{32} and ΔT_{41}, Equations (26) and (27) can each be differenced with one of the two equations derived from Equation (28) which is associated with one of the two pseudolites **27(1)–(2)**. Furthermore, the two equations associated with the pseudolites **27(1)–(2)** can be differenced with each other. Thus, where the equation associated with pseudolite **27(1)** is used as the base differencing equation, the following double difference phase relationships are established in Equations (29), (30), and (31):

$$\Phi_{25(i)27(1)} = \hat{s}^T_{24(i)}(x - t) - |x - t + A^T k_{38} - p_{43(1)}| + |p_{43(1)}| - N_{25(i)/27(1)} \quad (29)$$

$$\Phi_{30/27(1)} = |x - t + A^T k_{38} - p_{45}| - |x - t + A^T k_{38} - p_{43(1)}| - |p_{45}| + |p_{43(1)}| - N_{30/27(1)} \quad (30)$$

$$\Phi_{27(2)/27(1)} = |x - t + A^T k_{38} - p_{43(2)}| - |x - t + A^T k_{38} - p_{43(1)}| - |p_{43(2)}| + |p_{43(1)}| - N_{27(2)/27(1)} \quad (31)$$

where $N_{25(i)27(1)}$, $N_{30/27(1)}$, and $N_{27(2)/27(1)}$ are unknown constants which respectively represent the difference between the integer ambiguities $n_{25(i)}$ and $n_{27(1)}$, the integer ambiguities n_{30} and $n_{27(1)}$, and the integer ambiguities $n_{27(2)}$ and $n_{27(1)}$. Thus, the values $N_{25(i)/27(1)}$, $N_{27(2)/27(1)}$, and $N_{30/27(1)}$ are expressed as follows in Equations (32), (33), and (34):

$$N_{25(i)/27(1)} = n_{25(i)} - n_{27(2)} \quad (32)$$

$$N_{30/27(1)} = n_{30} - n_{27(1)} \quad (33)$$

$$N_{27(2)/27(1)} = n_{27(2)} - n_{27(1)} \quad (34)$$

Equations (29), (30), and (31) may then be linearized for each epoch to provide the following relationships in Equations (35), (36), and (37):

$$\delta\phi_{25(i)/27(1)} = \left(\hat{s}^T_{24(i)} - \frac{(x_0 - t + A^T k_{38} - p_{43(1)})}{|x_0 - t + A^T k_{38} - p_{43(1)}|}\right)\delta x + |p_{43(1)}| - N_{25(i)/27(1)} + \hat{s}^T_{24(i)} \quad (35)$$

$$\delta\phi_{30/27(1)} = \left(\frac{(x_0 - t + A^T k_{38} - p_{45})}{|x_0 - t + A^T k_{38} - p_{45}|} - \frac{(x_0 - t + A^T k_{38} - p_{43(1)})}{|x_0 - t + A^T k_{38} - p_{43(1)}|}\right)\delta x \quad (36)$$

$$\delta\phi_{27(2)/27(1)} = \left(\frac{(x_0 - t + A^T k_{38} - p_{43(2)})}{|x_0 - t + A^T k_{38} - p_{43(2)}|} - \frac{(x_0 - t + A^T k_{38} - p_{43(1)})}{|x_0 - t + A^T k_{38} - p_{43(1)}|}\right)\delta x - |p_{43(2)}| + |p_{43(1)}| - N_{27(2)/27(1)} \quad (37)$$

where (A) the guess for the estimate x_0 of the precise position vector x at each epoch is of the initialization period calculated by receiver **32** using Ordinary Differential GPS, and (B) δx is the vector at each epoch which represents the unknown precise difference between the unknown precise vector x and the estimate x_0.

The relationship between the vectors x and x_0 and the vector δx is represented as follows in Equation (38):

$$\delta x = x - x_0 \quad (38)$$

Furthermore, the vector δx can be expressed as follows in Equation (39):

$$\delta x = \begin{bmatrix} \delta x_{AT} \\ \delta x_{CT} \\ \delta x_A \end{bmatrix} \quad (39)$$

where δx_{AT}, δx_{CT}, and δx_A represent respectively at each epoch the unknown precise difference between the vectors x and x_0 in the along track, cross track, and altitude distances.

One method for computing the values $N_{25(i)/27(1)}$, $N_{30/27(1)}$, and $N_{27(2)/27(1)}$ only involves making carrier phase measurements $\Phi_{25(i)/34}$, $\Phi_{25(i)/40}$, $\Phi_{30/38}$, $\Phi_{30/40}$, $\Phi_{27(k)/38}$, and $\Phi_{27(k)/40}$ associated with the GPS signals **25(1)–(4)**, **27(1)–(2)**, and **30**. As mentioned previously, at least four GPS satellites **24(1)–(4)** are always guaranteed to be in view at any one time. Thus, the four GPS signals **25(1)–(4)**, barring any sudden maneuvers, will always be received by receivers **32** and **41**. Furthermore, this method can be used with several configurations for the ground system **39**.

Where the ground system **39** includes two initialization pseudolites **26(1)–(2)**, as shown in FIG. **1**, receiver **32** will make phase measurements $\Phi_{25(k)/34}$ and $\Phi_{27(k)/38}$ and receiver **41** will make measurements $\Phi_{25(i)/40}$ and $\Phi_{27(k)/40}$ over a number of epochs while airplane **21** is inside the signal bubbles **28(1)–(2)** and receives the initialization signals **27(1)–(2)**. During this initialization period, there is a large angular change in geometry between antennas **34** and **38** and the transmit antennas **43(1)–(2)** as the antennas **34** and **38** move through the signal bubbles **28(1)–(2)**.

The phase measurements made by the receivers **32** and **41** during this large angular change in geometry are recorded by receiver **32**. This is done in such a way that the equations generated from Equations (35) and (37) can be stacked in matrix form for simultaneously computing the unknown values $N_{25(i)/27(1)}$ and $N_{27(2)/27(1)}$ and the unknown vectors δx at each epoch.

In the case where only one initialization pseudolite **26** is used, as shown in FIG. **8**, receiver **32** will make the phase measurements $\Phi_{25(i)/34}$ and $\Phi_{27(1)38}$ and receiver **41** will make the phase measurements $\Phi_{25(i)/40}$ and $\Phi_{27(1)/40}$ over a number of epochs while inside signal bubble **28(1)**. In this case, there is a large angular change in geometry between antennas **34** and **38** and the transmit antenna **43(1)** as the antennas **34** and **38** move through the signal bubble **28(1)**.

As was the case in the dual initialization pseudolite configuration, the phase measurements made by the receivers **32** and **41** during the large angular change in geometry are recorded by receiver **32**. Receiver records these measurements in such a way that equations generated from Equation (35) can be stacked in matrix form for simultaneously computing the unknown values $N_{25(i)/27(1)}$ and the unknown vectors δx at each epoch.

For greater accuracy, receiver **32** is programmed to record the phase measurements $\Phi_{25(i)/34}$, $\Phi_{25(i)/40}$, $\Phi_{27(k)/38}$, and $\Phi_{27(k)/40}$ at more than the minimum number of epochs needed to compute the earlier described unknown values associated with each configuration. In either configuration, more than the required number of equations will be generated by receiver **32** from Equation (35) and, if applicable to the configuration used, Equation (37). All of these equations are stacked in matrix form for solving the unknowns associated with that configuration. Thus, the system and method will benefit because the set of unknowns will be overdetermined.

Another way of adding accuracy to the computation of the unknowns associated with either configuration, is to utilize

additional GPS satellites **24**(i) when they are in view. Thus, carrier phase measurements $\Phi_{25(i)/34}$ and $\Phi_{25(i)/40}$ for the additional GPS signal **25**(i) are also made by receiver **32** and receiver **41** respectively at a number of measurement epochs over the large change in geometry. These phase measurements are recorded by receiver **32**. In either configuration, additional equations will be generated by receiver **32** from Equation (33) at each epoch for solving the unknowns associated with that configuration. Once again, the system and method benefits from the over-determined set of unknowns.

As a variation of the two configurations described earlier, pseudolite **30** may be used as a carrier ranging link as well as a data link. Thus, phase measurements $\Phi_{30/38}$ and $\Phi_{30/40}$ are made by receivers **32** and **41** respectively at a number of epochs over the large change in geometry. These phase measurements are also recorded by receiver **32**. As a result, receiver **32** can generate from Equation (36) additional equations at each epoch for solving the earlier discussed unknowns associated with either configuration and the unknown value $N_{30/27(1)}$. These additional equations can serve as redundant equations to be stacked with all the other equations generated from Equation (35) and, if applicable, from Equation (37). Furthermore, if the lock on any of the GPS signals **25**(i) is lost for some reason, the equations generated from Equation (36) can serve as substitutes for the equations which would have been generated from Equation (35).

Most importantly, the computation of the unknown vector δx at each of the epochs employed in the initialization process and the computation of the unknown values $N_{25(i)/27(1)}$ and, if applicable, $N_{30/27(1)}$ or/and $N_{27(2)27(1)}$, is repeated iteratively until they converge to within a desired level. Receiver **32** accomplishes this by taking from the previous iteration the computed vector δx at each employed epoch and computing the vector x at each employed epoch from Equation (38). The computed vector x at each employed epoch is then substituted as the estimate x_0 into Equation (35) and, if applicable, into Equations (36) or/and (37). The unknown vector δx at each employed epoch and the unknown values $N_{25(i)/27(1)}$ and, if applicable, $N_{30/27(1)}$ or/and $N_{27(2)/27(1)}$, are then computed again. As was stated earlier, this process is repeated by receiver **32** until the computed unknown values $N_{25(i)/27(1)}$ and, if applicable, $N_{30/27(1)}$ or/and $N_{27(2)/27(1)}$, converge to within a desired level.

Once the values $N_{25(i)/27(1)}$ and, if applicable, $N_{30/27(1)}$ or/and $N_{27(2)/27(1)}$, have been computed to within the desired accuracy level, receiver **32** can compute the integer ambiguities $n_{25(i)}$ and $n_{27(1)}$ and, if applicable, $n_{27(2)}$ or/and n_{30}. This is done with the relationships established in Equation (32) and, if applicable, Equation (33) or/and (34). Thus, the large change in angular geometry between the antennas **34** and **38** and the transmit antenna **43(1)**, and if applicable, **43(2)**, provided means for resolving the integer ambiguities $n_{25(i)}$ and $n_{27(1)}$ and, if applicable, n_{30} and $n_{27(2)}$.

In this method, receiver **32** can make precise position determinations using Carrier Phase Differential GPS only after the values $N_{25(i)/27(1)}$, $n_{25(i)}$, and $n_{27(1)}$ and, if applicable, $N_{30/27(1)}$, $N_{27(2)/27(1)}$, n_{30} and $n_{27(2)}$, have been computed. Thus, these are the initialization values generated by receiver **32** during the initialization process.

Another method for resolving the integer ambiguities involves making and recording phase velocity measurements at a number of epochs while airplane **21** is inside the signal bubble **28(1)**, and if applicable, signal bubble **28(2)**. This method also requires taking the phase measurements $\Phi_{25(i)/34}$, $\Phi_{27(1)/38}$, $\Phi_{25(i)/40}$ and $\Phi_{27(1)/40}$, and if applicable, $\Phi_{27(2)/38}$ and $\Phi_{27(2)/40}$, at the same epochs and recording them. Both receiver **32** and **41** make phase velocity measurements at the same rate in which they make the above identified phase measurements.

As in the earlier described method, the phase measurements and the phase velocity measurements are made over a number of epochs while airplane **21** is inside the signal bubble **28(1)**, and if applicable, signal bubble **28(2)**. Furthermore, as the antennas **34** and **38** move through the signal bubble **28(1)** and, if applicable, **28(2)**, receiver **32** records the phase measurements made during the large angular change in geometry between antennas **34** and **38** and the transmit antenna **43(1)**, and if applicable, transmit antenna **43(2)**.

The phase velocity measurements are also made by receivers **32** and **41** at a number of epochs over the large change in geometry. The phase velocity measurements made by receiver **41** are uplinked to receiver **32** in the data components of any of the pseudolite GPS signals **27(1)–(2)** and **30**.

These phase velocity relationships are obtained by differentiating over time the Equations (9) and (26). These relationships are provided as follows in Equations (40) and (41):

$$\dot{\Phi}_{25(i)} = \dot{\Phi}_{25(i)/34} - \dot{\Phi}_{25(i)/40} = \dot{x}\hat{s}_{24(i)} + \dot{x}\hat{s}_{24(i)} + \Delta\dot{T}_{32} - \Delta\dot{T}_{41} \quad (40)$$

$$\dot{\Phi}_{27(k)} = \dot{\Phi}_{27(k)/38} - \dot{\Phi}_{27(k)/40} = \dot{r}_{43(k)/38} + \Delta\dot{T}_{32} - \Delta\dot{T}_{41} \quad (41)$$

where (A) $\dot{\Phi}_{25(i)/34}$ and $\dot{\Phi}_{27(k)/38}$ are the phase velocities measured by receiver **32**, (B) $\dot{\Phi}_{25(i)/40}$ and $\dot{\Phi}_{27(k)/40}$ are the phase velocities measured by receiver **41** and uplinked to receiver **32**, (C) $\hat{s}_{24(i)}$ is the rate of change of the unit direction vector $\hat{s}_{24(i)}$, (D) $\dot{x}$ is the rate of change of the precise position vector x, (E) $\dot{r}_{43(k)/38}$ is the rate of change in the range $r_{43(k)/38}$, and (F) $\Delta\dot{T}_{32}$ and $\Delta\dot{T}_{41}$, are the rate of changes in the clock synchronization errors ΔT_{32} and ΔT_{41} respectively.

Since $\dot{\hat{s}}_{24(i)}$ is small, it can generally be neglected in Equation (40). Furthermore, the phase velocity measurements $\dot{\Phi}_{25(i)/34}$ are made by receiver **32** at each epoch of the initialization process and the phase velocity measurements $\dot{\Phi}_{25(i)/40}$ are made by receiver **41** at these same epochs and uplinked to receiver **32**. In response, receiver **32** generates equations at each employed epoch from Equation (38) and stacks them in matrix form so as to compute $\dot{x}$ and the relationship $\Delta\dot{T}_{32}-\Delta\dot{T}_{41}$ at each employed epoch.

Since the relationship $\Delta\dot{T}_{32}-\Delta\dot{T}_{41}$ can be computed at each employed epoch, the actual rate of change $\dot{r}_{43(k)/38}$ can be computed by receiver **32** at each of these epochs as well. This is done by substituting into Equation (41) the relationship $\Delta\dot{T}_{32}-\Delta\dot{T}_{41}$ along with the phase velocity measurements $\dot{\Phi}_{27(k)/38}$ made by receiver **32** at each employed epoch and the phase velocity measurements $\dot{\Phi}_{27(k)/40}$ made by receiver **41** at these same epochs and uplinked to receiver **32**.

Furthermore, the actual rate of change $\dot{r}_{43(k)/38}$ can be expressed as follows in Equation (42):

$$\dot{r}_{43(k)/38} = \dot{r}_{0/43(k)/38} + \delta\dot{r} \quad (42)$$

where (A) $\dot{r}_{0/43(k)/38}$ is the guess at each employed epoch of the rate of change of $r_{43(k)/38}$, and (B) or is the precise difference between the actual and the guessed rate of change of $r_{43(k)/38}$. The guessed rate of change at each employed epoch is computed by receiver **32** using the vector relation-

ship associated with Equation (23), where the coarse position vector x_0 calculated from Ordinary Differential GPS is substituted in place of the vector x. The value $\delta\dot{r}$ at each employed epoch can be computed from the values $\dot{r}_{43(k)/38}$ and $\dot{r}_{0/43(k)/38}$ using Equation (40).

Equation (42) can also be linearized to provide the following relationship in Equation (43):

$$\delta\dot{r}_{43(k)/38} = \left(\frac{\dot{\vec{r}}_{0/43(k)/38} - \frac{\dot{\vec{r}}_{0/43(k)/38}\,\vec{r}_{0/43(k)/38}}{r_{0/43(k)/38}}}{r_{0/43(k)/38}} \right) \delta x \tag{43}$$

where (a) δx is the unknown constant vector representing the difference between the actual trajectory vector x and the estimated trajectory vector x_0 over the entire initialization period, (B) $\vec{r}_{0/43(k)/38}$ is the guess at each employed epoch for the actual range vector $\vec{r}_{43(k)/38}$, and (C) $\dot{r}_{0/43(k)/38}$ is the guess at each employed epoch for the actual rate of change in $\vec{r}_{43/(k)/38}$. The values for the guesses $\vec{r}_{0/43(k)/38}$ and $\dot{r}_{0/43(k)/38}$ can be easily computed by receiver **32** using similar relationships to that established in Equation (23), where the coarse position vector x_0 calculated from Ordinary Differential GPS is substituted in place of the vector x.

The values $\delta\dot{r}$, $\dot{r}_{0/43(k)/38}$, $\dot{r}_{0/43(k)/38}$, $\vec{r}_{0/43(k)/38}$ and $\dot{r}_{0/43(k)/38}$ are computed by receiver **32** at each of the epochs employed during the large angular change in geometry are stored by receiver **32**. Thus, from these stored values receiver **32** can generate equations from Equation (43) which are stacked in matrix form for solving for the unknown vector δx.

The calculation for δx is iteratively repeated until it converges to within a desired level. This is done by substituting the value of δx obtained in the previous iteration into Equation (37) and computing the vector x. This calculated vector x is then used as x_0 for the next iteration. The vector δx is then computed again from Equation (43) in the way just described and compared with the previously computed δx to see if it converged to within the desired level.

Once δx is computed, the integer ambiguities $n_{25(i)}$ and $n_{27(1)}$, and if applicable, $n_{27(2)}$, can be computed using Equation (26). This requires substituting into Equation (26) the phase measurements $\Phi_{25(i)/34}$, $\Phi_{27(1)/38}$, $\Phi_{25(i)/40}$ and $\Phi_{27(1)/40}$, and if applicable, $\Phi_{27(2)/38}$ and $\Phi_{27(2)/40}$, recorded by receiver **32**. Thus, receiver **32** generates a set of equations from Equation (26) which are stacked in matrix form for solving for the integer ambiguities $n_{25(i)}$ and $n_{27(1)}$, and if applicable, $n_{27(2)}$. Thus, as in the previous method, the large change in angular geometry between the antennas **34** and **38** and the transmit antenna **43(1)**, and if applicable, **43(2)**, provides means for resolving the integer ambiguities $n_{25(i)}$ and $n_{27(1)}$ and, if applicable, n_{30} and $n_{27(2)}$.

As with the previous method, receiver **32** can make precise position determinations using Carrier Phase Differential GPS only after the integer ambiguities $n_{25(i)}$ and $n_{27(1)}$ and, if applicable, n_{30} or/and $n_{27(2)}$ have been computed. Thus, these are the initialization values generated by receiver **32** during the initialization process of this method.

The fact that the integer ambiguities $n_{25(i)}$ and $n_{27(1)}$ and, if applicable, n_{30} or/and $n_{27(2)}$, are integer values serves as a built-in integrity checking device for both of the methods described. Thus, receiver **32** can check to see during the initialization process that these computed integer ambiguities converge to integer values.

Once the integer ambiguities $n_{25(i)}$ and $n_{27(1)}$ and, if applicable, n_{30} and $n_{27(2)}$, have been computed, receiver **32** can compute at each epoch the precise position vector x. This is done by substituting the integer ambiguity $n_{25(i)}$ into Equation (26), and if applicable, the integer ambiguity n_{30} into Equation (27). Since airplane **21** will have left the signal bubble **28(1)**, and if applicable, signal bubble **28(2)**, Equation (28) is no longer usable for computing the vector x.

Receiver **32** makes the phase measurements $\Phi_{25(i)/34}$ at each epoch and receives the phase measurements $\Phi_{25(i)/40}$ made by receiver **41**. Thus, receiver **32** can stack at each epoch the equations generated from Equation (26) in matrix form for solving for the vector x and the total clock synchronization error $\Delta T_{32-\Delta T41}$.

Once the precise position vector x is computed, the position vector y for the bottom antenna **38** or any other part of the airplane **21** can easily be computed. The position vector y for bottom side antenna **38** can easily be computed from the relationship established in Equation (25). Additionally, it is particularly critical for the position of the landing gear of the airplane **21** to be known during a landing. Thus, using a similar equation to that of Equation (25), the precise position of the landing gear can also be computed if its location relative to top side antenna **34** in the runway coordinate system **46** is precisely surveyed beforehand.

Furthermore, where pseudolite **29** is used as a carrier ranging link, receiver **32** makes the phase measurement $\Phi_{30/38}$ and receives the phase measurement $\Phi_{30/40}$ made by receiver **41**. Thus, receiver **32** can stack unto the equations generated from Equation (26) the equation generated from Equation (27) for solving for the vector x and the total clock synchronization error $\Delta T_{32}-\Delta T_{41}$. In this case, the ranging pseudolite **29** serves as an integrity check in that the system and method benefit from the over-determined set of unknowns.

Still another built-in integrity check is the use of Ordinary Differential GPS position determinations by receiver **32**. The system and method do not require PRN code ranging except for generating the coarse initial guess for position vector x_0 at each epoch of the initialization period. Thus, the coarse position determinations made by receiver **32** can be used after the initialization period to monitor the Carrier Phase Differential GPS position determinations made by receiver **32**.

In the single initialization pseudolite configuration of FIG. **8**, airplane **21** moves through the signal bubble **28(1)** in a simple linear trajectory **22** over the initialization pseudolite **26(1)**. As indicated previously, the system and method utilizes the large angular change in geometry between airplane **21** and the pseudolite antenna **43(1)** of pseudolite **26** in order to resolve the integer ambiguities $n_{25(i)}$, n_{30}, and $n_{27(1)}$. Considered with respect to the slowly changing GPS satellite geometry, this large angular change in geometry will make the along track component δx_{AT} and altitude component δx_A of precise position change vector δx clearly observable during this initialization period. Thus, the resolved integer ambiguities $n_{25(i)}$ and n_{30} will provide subsequent position determinations where the along track component x_{AT} and the altitude component x_A of precise position vector x are accurate to within centimeters.

However, in most cases the initialization trajectory **22** will be in a line closely over the pseudolite **26(1)** with little or no cross track (i.e. lateral) deviation. Under these circumstances, as is evident from the linearized Equations (35)–(37), the cross track component δx_{CT} of precise position change vector δx will be unobservable during initialization. Thus, the resolved integer ambiguities $n_{25(i)}$ and n_{30}

will result in subsequent position determinations where the cross track component x_{CT} of precise position vector x will only be accurate to within meters. This accuracy is commensurate with the accuracy of the initial guess for the vector x_0 calculated by receiver **32** at each epoch of the initialization.

One way in which the cross track error can be reduced to within centimeters is to employ the configuration of FIG. **1** which utilizes two initialization pseudolites **26(1)–(2)**. As shown in FIG. **9**, the two initialization pseudolites **26(1)–(2)** are placed on each side of the along track component of the flight trajectory **22**. Because there are now two carrier ranging links **27(1)–(2)** in the cross track plane, the cross track component δx_{CT} of precise position change vector δx will be clearly observable during initialization. As a result, the cross track uncertainty of the single pseudolite configuration is eliminated and the resolved integer ambiguities $n_{25(i)}$ and n_{30} will then provide subsequent position determinations having a cross track component x_{CT} accurate to within centimeters.

Another way of reducing the cross track error to within centimeters is to overfly the single initialization pseudolite **26** twice. As shown in FIG. **10**, the first overflight is made in the along track AT direction and the second in the cross track CT direction.

With the first overflight, a first set of integer ambiguities $n_{25(i)}$ and n_{30} are resolved during a first initialization period. As was discussed for the single initialization pseudolite configuration, after initialization, position receiver **32** provides Carrier Phase Differential GPS position determinations with a cross track error of several meters.

During the second overflight, the coarse initial guess for position vector x_0 is calculated by position receiver **32** using Carrier Phase Differential GPS position determinations. Since the overflight is in the cross track direction (rather than in the along track direction), the cross track component δx_{CT} and the altitude component δx_{CT} of the precise position change vector δx will be clearly observable. But, the along track component δx_{AT} will not be observable during this second overflight. However, the along track component $x_{0/AT}$ of the initial guess for position vector x_0 calculated for the second overflight is already within centimeter level due to the earlier overflight. Therefore, the second set of integer ambiguities $n_{25(i)}$ and n_{30} resolved during the second overflight will provide subsequent position determinations with the cross track component x_{CT}, the along track component x_{AT}, and the altitude component x_A all accurate to within centimeters.

Another significant advantage to Carrier Phase Differential GPS position determinations is that the integer ambiguities $n_{25(i)}$ of an additional GPS signals **25**(i) broadcast by GPS satellites **24**(i) which were not in view during the initialization period can now be resolved easily once they do become in view after the initialization period. Receiver **32** accomplishes this by measuring $\Phi_{25(i)/34}$ and $\Phi_{25(i)/40}$ for the new GPS signals **25**(i) at a particular epoch after the initialization period. At this epoch the precise position vector x is already being determined by receiver **32** from the other GPS signals **25(1)–(4)** and **30** which have had their respective integer ambiguities $n_{25(i)}$ and n_{30} resolved during the initialization period. The calculated position vector x and the phase measurements $\Phi_{25(i)/34}$ and $\Phi_{25(i)/40}$ are plugged into Equation (24) so as to solve for the new integer ambiguity $n_{25(i)}$. Then, a new equation is generated from Equation (24) at each epoch for use in solving for the position vector x. Thus, this technique results in a seamless integer hand-off so that a new initialization period is unnecessary.

The same approach can be utilized for GPS signal **30** where the integer ambiguity n_{30} was not resolved during initialization. After initialization, the phase measurements $\Phi_{30/38}$ and $\Phi_{30/40}$ are made at a particular epoch. These values along with the calculated precise position vector x calculated for that epoch by receiver **32** are substituted into the Equation (25) so as to solve for the integer ambiguity n_{30}. Thus, this again results in a seamless integer hand-off.

The attitude matrix A is generated by receiver **33** from the GPS signals **25(1)–(4)** received by antennas **35(1)–(3)** and **38**. In doing so, receiver **33** utilizes Equation (1) associated with antenna **34** and a set of similarly derived phase relationships each associated with one of the antennas **35(1)–(3)**. For antenna **35**(m) (i.e. the mth of the attitude antennas **35**(l)–**(3)**) this phase relationship is provided in Equation (43):

$$\Phi_{25(i)/35(m)}=r_{24(i)/35(m)}-n_{25(i)/35(m)}+\Delta T_{33}\Delta T_{24(k)} \tag{43}$$

where (A) $r_{24(i)/35(m)}$ represents the unknown range from GPS satellite **24**(i) to antenna **35**(m), (B) $\Phi_{25(i)/35(m)}$ represents the phase component of the unknown range $r_{24(i)/35(m)}$ measured by receiver **32** for the GPS signal **25**(i) received at antenna **35**(m), and (C) $n_{25(i)/35(m)}$ represents the integer component of the unknown range $r_{24(i)/35(m)}$ associated with GPS signal **25**(i) received at antenna **35**(m).

Receiver **33** measures $\Phi_{25(i)/34}$ and $\Phi_{25(i)/35(m)}$ in the same way as was discussed earlier for receivers **32** and **41**. These measurements are made at the same rate as is used by receivers **32** and **41** so that the attitude solutions generated by receiver **33** are synchronized with the position determinations of receiver **32**.

Differencing Equations (1) and (43) provides the single difference phase relationship given as follows in Equation (44):

$$\Phi_{25(i)/34/35(m)}=\Phi_{25(i)/34}-\Phi_{25(i)/35(m)}=\Delta r_{24(i)/34/35(m)}-n_{25(i)/34/35(m)} \tag{44}$$

where (A) $n_{25(i)/34/35(m)}$ represents the unknown integer ambiguity for GPS signal **25**(i) associated with antennas **34** and **35**(m) and (B) $\Delta r_{24(i)/34/35(m)}$ represents the difference in the unknown ranges $r_{24(i)/34}$ and $r_{24(i)/35(m)}$.

In order to resolve the integers ambiguities $n_{25(i)/34/35(m)}$ properly, Equation (44) must be manipulated so as to include the baseline vector relationships which are associated with the ranges $r_{24(i)/34}$ and $r_{24(i)/35(m)}$. These relationships are shown in FIG. **11** and are established with respect to the runway coordinate system **46** which is defined by the coordinates along track AT, cross track CT and altitude A.

The baseline vectors $b_{35(1)}$, $b_{35(2)}$, and $b_{35(3)}$ respectively represent the unknown positions of attitude antennas **35(1)–(3)** with respect to antenna **34** at the initial epoch of the initialization period. The baseline vector $b_{35(m)}$ [3×1] (i.e. the mth of the baseline vectors $b_{35(1)}$, $b_{35(2)}$, and $b_{35(3)}$) is provided as follows in Equation (45):

$$b_{35(m)} = \begin{bmatrix} b_{35(m)/AT} \\ b_{35(m)/CT} \\ b_{35(m)/A} \end{bmatrix} \tag{45}$$

where $b_{35(m)/AT}$, $b_{35(m)/CT}$, and $b_{35(m)/A}$ are respectively the distances between antennas **35**(m) and **34** in the along track AT, cross track CT, and altitude A directions.

The direction to GPS satellite **24**(i) (i.e. the ith of GPS satellites **24(1–(4))** in relation to antenna **34** is represented

by the known unit direction vector $\hat{s}_{24(i)/34}$ [3×1] provided as follows in Equation (46):

$$\hat{s}_{24(i)/34} = \begin{bmatrix} \hat{s}_{24(i)/34/AT} \\ \hat{s}_{24(i)/34/CT} \\ \hat{s}_{24(i)/34/A} \end{bmatrix} \tag{46}$$

where $\hat{s}$**24**(i)/**34**/AT, $\hat{s}_{24(i)/34/CT}$, $\hat{s}_{24(k)/34/A}$ are respectively the unit distances to GPS satellite **24**(i) in the along track AT, cross track CT, and altitude A directions. This vector is computed by receiver **33** for a GPS satellite **24**(i) from the satellite position information contained in the data component of the associated GPS signal **25**(i) and form the coarse position fix generated by receiver **32** for antenna **34** with respect to the coordinate system used to determine the positions of the GPS satellite **24**(i).

From the preceding vector relationships in Equations (45) and (46), the following mathematical relationship is provided in Equation (47):

$$\Delta r_{24(i)/34/35(m)} = \hat{s}^{T}_{24(i)} b_{35(m)} \tag{47}$$

Combining Equation (47) with Equation (44) results in the following relationship in Equation (48):

$$\Phi_{25(i)/34/35(m)} = \hat{s}^{T}_{24(i)} b_{35(m)} - n_{25(i)/34/35(m)} \tag{48}$$

The integer ambiguities $n_{25(i)/34/35(m)}$ can be computed during an initialization period using two different approaches. The first approach requires that the airplane **21** remain stationary during the initialization process. The second is motion-based.

The static method is similar to that used in surveying applications. After several epochs of measuring $\Phi_{25(i)/34}$ and $\Phi_{25(i)/35(m)}$, receiver **33** can generate equations from Equation (47) which are stacked in matrix form for solving the integer ambiguities $n_{25(i)/34/35(m)}$.

In order to insure greater accuracy for the computed values, receiver **33** employs more than the minimum number of epochs needed to compute these values. As a result, the system benefits from the over-determined set of unknowns.

Furthermore, receiver **33** makes measurement epochs over a large enough time period to allow the slowly changing GPS satellite geometry to reveal the integer ambiguities $n_{25(i)/34/35(m)}$. This typically requires approximately fifteen minutes.

Additionally, where possible, phase measurements $\Phi_{25(i)/34}$ and $\Phi_{25(i)/35(m)}$ for additional GPS signals **25**(i) are made by receiver **33**. Again, the system benefits from the over-determined set of unknowns.

The second approach to resolving the integer ambiguities $n_{25(i)/34/35(m)}$ requires rotation of the antennas **35(1)–(3)** about at least one of the axis of the runway coordinate system **46**. FIG. **12** shows the vector relationships for such a rotation.

In FIG. **12**, antennas **35(1)–(3)** rotate about the altitude A axis. The baseline vectors $b_{35(1)}$, $b_{35(2)}$, and $b_{35(3)}$ are unknown at the initial epoch of the initialization process. The vectors $\Delta b_{35(1)}$, $\Delta b_{35(2)}$, and $\Delta b_{35(3)}$ respectively represent the change in positions of the antennas **35(1)–(3)** at a second epoch with respect to the initial baseline vectors $b_{35(1)}$, $b_{35(2)}$, and $b_{35(3)}$. The vector $\Delta b_{35(m)}$ (i.e. the mth of the vectors $\Delta b_{35(1)}$, $\Delta b_{35(2)}$, and $\Delta b_{35(3)}$) is provided as follows in Equation (49):

$$\Delta b_{35(m)} = \begin{bmatrix} \Delta b_{35(m)/AT} \\ \Delta b_{35(m)/CT} \\ \Delta b_{35(m)/A} \end{bmatrix} \tag{49}$$

where $\Delta b_{35(m)/AT}$, $\Delta b_{35(m)/CT}$, and $\Delta b_{35(m)/A}$ are respectively the change in position of the antenna **35**(m) at the second epoch in the along track AT, cross track CT, and altitude directions.

The equations generated from Equation (49) at the initial and the second epoch can be subtracted to establish the following relationship in Equation (50):

$$\Delta\Phi_{25(i)/34/35(m)} = \hat{s}^{T}_{24(i)} \Delta b_{35(m)} \tag{50}$$

where $\Delta\Phi_{25(i)/34/35(m)}$ represents the change in $\Phi_{25(i)/34/35(m)}$ between the initial epoch and the second epoch.

The equations generated from Equation (50) may be stacked at a number of epochs after the initial epoch to solve for the vectors $\Delta b_{35(m)}$. Thus, the vectors $\Delta b_{35(m)}$ may be simultaneously computed at each of these epochs without resolving the integer ambiguities $n_{25(i)/34/35(m)}$.

The antennas **35(1)–(3)** are fixed to the airplane **21**. Thus, the following constraint relationship may be imposed on the baseline vectors $b_{35(y)}$ and $b_{35(z)}$ (i.e. the yth and z^{th} of the vectors $b_{35(1)}$–$b_{35(3)}$) as follows in Equation (51):

$$(b_{35(y)} + \Delta b_{35(y)})(b_{35(z)} + \Delta b_{35(z)}) = b^{T}_{35(y)} b_{35(z)} \tag{51}$$

However Equation (51) can also be mathematically expressed as follows in equation (52):

$$\begin{aligned}(b_{35(y)} + \Delta b_{35(y)})(b_{35(z)} + \Delta b_{35(z)}) = \\ b^{T}_{35(y)} b_{35(z)} + \Delta b^{T}_{35(z)} b_{35(y)} + \Delta b^{T}_{35(y)} b_{35(z)} + \Delta b^{T}_{35(y)} \Delta b_{35(z)}\end{aligned} \tag{52}$$

Thus, the Equations (51) and (52) can be combined to form the following relationship in Equation (53):

$$\Delta b^{T}_{35(z)} b_{35(y)} + \Delta b^{T}_{35(y)} b_{35(z)} = \Delta b^{T}_{35(y)} b_{35(z)} \tag{53}$$

Equation (53) can be stacked by receiver **33** in matrix form to provide equations at each epoch employed after the initial epoch for solving the unknown vectors $b_{35(m)}$. This includes the situations where y≠z and where y=z.

For greater accuracy more than the minimum number of epochs needed to calculate the baseline vectors $b_{35(m)}$ should be employed by receiver **33**. As a result, receiver **33** can generate additional equations from Equation (53) for simultaneously solving the over-determined set of unknown baseline values.

Once these baseline values are computed, receiver **33** can compute each integer ambiguity $n_{25(i)/34/35(m)}$. This is done by plugging a computed baseline vector $b_{35(m)}$ and the phase measurement $\Phi_{25(i)/34/35(m)}$ recorded by receiver **33** at the initial epoch into Equation (48) and solving for the integer ambiguity $n_{25(i)/34/35(m)}$. As a built in integrity check, the computed $n_{25(i)/34/35(m)}$ values are checked during the initialization period to see that they converge to integer values.

Once the integer ambiguities have been resolved, the initialization process is over and attitude solutions for airplane **21** can then be computed. The integer ambiguities $n_{25(i)/34/35(m)}$ are included in the set of initialization values needed for computing the attitude solutions.

FIG. **7** shows the vector relationships associated with antennas **35(1)–(3)** with respect to the body coordinate system **47**. The known vectors $k_{35(1)}$, $k_{35(2)}$, and $k_{35(3)}$ respectively represent the precisely surveyed positions of attitude antennas **35(1)–(3)** from antenna **34** with respect to the body coordinate system **47**. The known vector $k_{35(m)}$ [3×1] (i.e. the mth of the known vectors $k_{35(1)}$, $k_{35(2)}$, and $k_{35(3)}$ is provided as follows in Equation (54):

$$k_{35(m)} = \begin{bmatrix} k_{35(m)/X} \\ k_{35(m)/Z} \\ k_{35(m)/Z} \end{bmatrix} \tag{54}$$

where $k_{35(m)/X}$, $k_{35(m)/Y}$, and $k_{35(m)/Z}$ are respectively the known distances between antennas **35**(m) and **34** in the X, Y, and Z directions.

FIG. **8** shows the vector relationships associated with antennas **35(1)–(3)** as the body coordinate system **47** rotates about the runway coordinate system **46**. The unknown vectors $x_{35(1)}$, $x_{35(2)}$, and $x_{35(3)}$ respectively represent the unknown positions of attitude antennas **35(1)**, **35(2)**, and **35(3)** from antenna **34** with respect to the runway coordinate system **46**. The unknown vector $x_{35(m)}$ [3×1] (i.e. the mth of the unknown vectors $x_{35(1)}$, $x_{35(2)}$, and $x_{35(3)}$ is provided as follows in Equation (55):

$$x_{35(m)} = \begin{bmatrix} x_{35(m)/AT} \\ x_{35(m)/CT} \\ x_{35(m)/A} \end{bmatrix} \tag{55}$$

where $x_{35(m)/AT}$, $x_{35(m)CT}$, and $x_{35(m)/A}$ are respectively the unknown distances between antennas **35**(m) and **34** in the along track AT, cross track CT, and altitude A directions.

From the preceding vector relationships in Equations (46) and (55), the following relationship is provided in Equation (56):

$$\Delta r_{24(i)/34/35(m)} = \hat{s}^T_{24(i)} x_{35(m)} \tag{56}$$

Combining Equations (56) and (44) results in the following relationship in Equation (57):

$$\Phi_{25(i)/34/35(m)} \hat{s}^T_{24(i)} x_{35(m)} - n_{25(i)/34/35(m)} \tag{57}$$

Since, as discussed earlier, the attitude matrix A represents the rotation of the body coordinate system **47** about the runway coordinate system **46**, the following relationship may be established in Equation (58)

$$x_{35(m)} = A^T k_{35(m)} \tag{58}$$

Combining equation (58) with Equation (57) results in the following relationship provided by Equation (59):

$$\Phi_{25(i)/34/35(m)} \hat{s}^T_{24(i)} A^T k_{35(m)} - n_{25(i)/34/35(m)} \tag{59}$$

A complete attitude solution can be generated by receiver **33** by utilizing the differential ranges $\Delta r_{24(i)/34/35(m)}$ which can be computed from Equation (44). This is done by minimizing the following quadratic cost function provided in Equation (60):

$$J = \sum_{m=1}^{l} \sum_{i=1}^{j} w_{35(m)/24(i)} (\Delta r_{24(i)/34/35(m)} - k^T_{35(m)} A \hat{s}_{24(i)})^2 \tag{60}$$

where $w_{35(m)/24(i)}$ represent the optional measurement weighting associated with antenna **35**(m) and GPS satellite **24**(i).

Starting with an assumed estimate A_0 [3×3] for the matrix A, a better estimate may be obtained by linearizing Equation (60) about the current solution A_0 as follows in Equation (61):

$$J = \sum_{m=1}^{l} \sum_{i=1}^{j} w_{35(m)/24(i)} (\Delta r_{24(i)/34/35(m)} - k^T_{35(m)} \delta A A_0 \hat{s}_{24(i)})^2 \tag{61}$$

where δA [3×3] is an attitude correction matrix of small angle rotations.

Thus, the attitude matrix A may be expressed as follows in Equation (62):

$$A = \delta A A_0 \tag{62}$$

The correction matrix δA is expressed as follows in Equation (63):

$$\delta A = I + \Theta^x \tag{63}$$

where (A) I [3×3] is an identity matrix, and (B) Θ^x [3×3] is the skew symmetric matrix associated with the unknown vector δΘ of small angle rotations.

The unknown vector δΘ [3×1] can be expressed as follows in Equation (64):

$$\delta\theta = \begin{bmatrix} \delta\theta_x \\ \delta\theta_y \\ \delta\theta_z \end{bmatrix} \tag{64}$$

where $\delta\Theta_x$, $\delta\Theta_y$, and $\delta\Theta_z$ respectively represent the unknown small angle rotations about the X, Y, and Z coordinates of the body coordinate system **47**.

The skew symmetric matrix Θ^x associated with the vector δΘ can be expressed as follows in Equation (65):

$$\theta' = \begin{bmatrix} 0 & -\delta\theta_Z & \delta\theta_Y \\ \delta\theta_Z & 0 & -\delta\theta_X \\ -\delta\theta_Y & \delta\theta_X & 0 \end{bmatrix} \tag{65}$$

After combining Equations (62)–(65) with Equation (61), the attitude cost function can be expressed as follows in Equation (66):

$$J = \sum_{m=1}^{l} \sum_{i=1}^{j} w_{35(m)/24(i)} (\Delta r_{24(i)/34/35(m)} - k^T_{35(m)} A_0 s_{24(i)} - s_{24(i)} A_0^T K^x_{35(m)} \delta\theta)^2 \tag{66}$$

where the dot product of the matrix $K_{35(m)}$ and the vector δΘ equals the dot product of the matrix Θ^x and the vector $k_{35(m)}$.

The matrix $K_{35(m)}{}^x$ may be represented as follows in Equation (67):

$$K^x_{35(m)} = \begin{bmatrix} 0 & -k_{35(m)/AT} & k_{35(m)/AT} \\ k_{35(m)/CT} & 0 & -k_{35(m)/CT} \\ -k_{35(m)/A} & k_{35(m)/A} & 0 \end{bmatrix} \quad (67)$$

By minimizing Equation (66), the vector $\delta\Theta$ may be computed by receiver **33**. As a result, the matrix Θ^x may be computed from Equation (65) and the matrix δA may then be computed from Equation (63). Using the computed matrix δA and the computed matrix A_0, receiver **33** computes a more accurate estimate for matrix A from Equation (62).

The estimate A from the previous iteration is used as the current solution A_0 for the next iteration. The new estimate A is then computed and compared with the estimate A from the previous iteration. This process is continued until the estimate for A converges to within a desired level.

Another significant advantage to this approach is that the integer ambiguities $n_{25(i)/34/35(m)}$ of an additional GPS signal **25**(i) broadcast by GPS satellite **24**(i) which was not in view during the initialization period can be resolved once it does become in view after the initialization period. Receiver **33** accomplishes this by measuring $\Phi_{25(i)/34}$ and $\Phi_{25(i)/35(m)}$ for the new GPS signal **25**(i) at a particular epoch after the initialization period. At this epoch the matrix A has already being determined by receiver **33** from the other GPS signals **25(1)–(4)** which have had their respective integer ambiguities $n_{25(i)/34/35(m)}$ resolved during the initialization period. The calculated attitude matrix A and the phase measurements $\Phi_{25(i)/34}$ and $\Phi_{25(i)/35(m)}$ are plugged into Equation (54) so as to solve for the new integer ambiguity $n_{25(i)/34/35(m)}$. Then, this newly computed integer ambiguity $n_{25(i)/34/35(m)}$ together with the phase measurements for the newly acquired GPS signal **25**(i) may be used in computing the matrix A in the two ways just described. Thus, this technique results in a seamless integer hand-off so that a new initialization period is unnecessary.

DETAILED DESCRIPTION OF GROUND SYSTEM

FIGS. **13–17** provide detailed illustrations of the elements of the ground system **39**. The functions of these elements, in relation to the previously described equations, are better understood with reference to these figures.

FIG. **13** shows the reference system **39** in the configuration which employs dual initialization pseudolites **26**. It comprises reference GPS antenna **40**, reference GPS receiver **41**, the two initialization pseudolites **26(1)–(2)**, and the data and ranging link pseudolite **29**.

Reference antenna **40** receives GPS signals **25(1)–(4)**, **27(1)–(2)**, and **30**. It is at a known ground location, represented by the previously described vector t, with respect to the runway **23** threshold. In this configuration, this location can be on either side of the runway **23** but is within the broadcast radius of the signal bubbles **28(1)–(2)**. It is also at a known location with respect to the coordinate system used to define the positions of the GPS satellites **24(1)–(4)**.

Reference GPS receiver **41** receives the GPS signals **25(1)–(4)**, **27(1)–(2)**, **30** from the reference antenna **40**. It includes a signal receiving block **50**, a signal processing block **51**, a reference oscillator **55**, a synthesizer **56**, and a computer **57**.

In this configuration, the signal receiving block **50** comprises a single signal receiving stage **53**. The signal receiving stage **53** is coupled to reference antenna **40** for receiving the GPS signals **25(1)–(4)**, **27(1)–(2)**, and **30** from reference antenna **40**. It extracts the received GPS signals **25(1)–(4)**, **27(1(–(2)**, and **30** and down converts them to an intermediate frequency for signal processing by the signal processing block **51**.

The signal processing block **51** in this configuration includes a single multi-channel signal processing stage **54**. The signal processing stage is coupled to the signal receiving stage **53** for receiving the down converted GPS signals **25(1)–(4)**, **27(1)–(2)**, and **30**. It is also coupled to computer **57** for receiving signal processing control signals from the computer **56**. The signal processing stage **54** separates (i.e. demodulates) each of the down converted GPS signal **25(1 (4)**, **27(1)–(2)**, or **30** into its carrier, PRN code, and data components.

Furthermore, with the signal processing control signals provided by the computer **57**, the signal processing stage **54** phase locks the carrier and PRN code components of each of the GPS signals **25(1)–(4)**, **27(1)–(2)**, or **30** with the carrier and PRN code signals it generates. As a result, the signal processing stage **54** provides the computer **57** with information for making the earlier described carrier phase measurements, PRN code phase measurements, and carrier phase velocity measurements for the GPS signal **25(1)–(4)**, **27(1)–(2)**, or **30**.

The computer **57** is coupled to the signal processing stage **54**. It includes a central processing unit (CPU) **58** and a computer memory **59**.

The CPU **58** receives from the signal processing block **51** the information for making the earlier described carrier phase measurements, PRN code phase measurements, and phase velocity measurements described earlier for the GPS signal **25(1)–(4)**, **27(1)–(2)**, and **30**. Furthermore, the CPU also receives from the signal processing block **51** the demodulated data components of the GPS signal **25(1)–(4)**, **27(1)–(2)**, and **30**.

The computer memory **59** stores the signal processing routine **160**, the carrier phase measuring routine **161**, the PRN code phase measuring routine **162**, the phase velocity measuring routine **163**, and the data formatting routine **164**. The CPU **58** is coupled to the computer memory **59** for receiving the routines **160–164**.

The signal processing routine **160** generates the signal processing control signals for controlling the carrier and PRN code phase locking operations of the signal processing block **51**. These control signals are outputted by the CPU **58** and received by the signal processing block **51**.

The carrier phase measuring routine **161** makes the phase measurements $\Phi_{25(1)/40}$, $\Phi_{30/40}$ and $\Phi_{27(k)/40}$ based on the information received from the signal processing block **51**. Thus, the routine **161** and the signal processing block **51** make up the carrier phase measuring component of the receiver **41**. Furthermore, as was indicated earlier, each of these carrier phase measurement includes both a fractional wavelength phase component Φ_{fr} and an integer wavelength phase change component Φ_{int}. These phase measurements are used by receiver **32** for making Carrier Phase Differential GPS position determinations.

The PRN code phase measuring routine **162** makes the earlier described PRN code phase measurements for the GPS signals **25(1)–(4)**, **27(1)–(2)**, and **30** based on the information received from the signal processing block **51**. Thus, the routine **162** and the signal processing block **51** make up the PRN code phase measuring component of the receiver **41**. As was indicated earlier, these measurements are used by receiver **32** for Conventional GPS and Ordinary Differential GPS position determinations.

The carrier phase velocity measuring routine **163** makes the phase velocity measurements $\Phi_{25(i)/40}$ and $\Phi_{27(k)/40}$ based on the information received from the signal processing block **51**. Thus, the routine **163** and the signal processing block **51** make up the carrier phase velocity measuring component of the receiver **41**. As was indicated earlier, each of these phase velocity measurements are used by receiver **32** for calculating the initialization values necessary for Carrier Phase Differential GPS position determinations.

The routines **161–163** issue their respective measurements at the same rate as is do the measurement routines in receivers **32** and **33**. This is done so that the carrier and PRN code phase measurements and the phase velocity measurements of receivers **32** and **33** can be synchronized with the carrier and PRN code phase measurements and phase velocity measurements of receiver **41** which have been uplinked to receiver **32**. As was discussed earlier, these carrier phase measurements are made by the routines **161–163** at the rate or approximately 1–10 Hz.

The formatting routine **164** then formats together the carrier and PRN code phase measurements and phase velocity measurements made for each of the GPS signals **25(1)–(4)**, **27(1)–(2)**, and **30**. This formatted data is then outputted by the CPU **58** and received by the signal generators **42(1)–(2)** and **44**.

The synthesizer **56** and the reference oscillator **55** are coupled together. The reference frequency signal outputted by the oscillator **55** is used by the synthesizer **56** to generate a down converting signal and a clock signal.

The down converting signal is received by the signal receiving stage **53**. It is used to down convert the received GPS signals **25(1)–(4)**, **27(1)–(2)**, and **30** to the intermediate frequency.

The clock signal is received by the signal processing stage **54** and the CPU **58**. Since the CPU **58** and the signal processing stage **54** operate based on the same clock source, the carrier phase measurements, PRN code phase measurements, and carrier phase velocity measurements made for each of the GPS signals **25(1)–(4)**, **27(1)–(2)**, and **30** are coherent (i.e. made at the same time) with respect to each other.

Pseudolites **26(1)–(2)** and **29** respectively generate and broadcast the GPS signals **27(1)–(2)** and **30**. Each is coupled to the reference receiver **41**. Pseudolites **26(1)–(2)** and **29** respectively include the GPS signal generators **42(1)–(2)** and **44** and respectively include the pseudolite antennas **43(1)–(2)** and **45**.

The signal generators **42(1)–(2)** and **44** are respectively coupled to the pseudolite antennas **43(1)–(2)** and **45**. The signal generators **42(1)–(2)** and **44** respectively include the computers **62(1)–(3)**, the reference oscillators **63(1)–(3)**. the synthesizers **64(1)–(3)**, the PRN code generators **65(1)–(3)**, the mixing stages **66(1)–(3)**, and the amplifiers **67(1)–(3)**.

The computers **62(1)–(3)** respectively have CPUs **68(1)–(3)** and computer memories **69(1)–(3)**. The CPUs **68(1)–(3)** each receive the data formatted by the formatting routine **164** of computer **57**. The computer memories **69(1)–(3)** respectively store the data modulating routines **70(1)–(3)** and the reference system data bases **72(1)–(3)**.

The reference system data bases **72(1)–(3)** can include (a) the precisely surveyed position of reference antenna **40** with respect to the coordinate system used to determine the positions of the GPS satellites **24(1)–(4)**, (b) the precisely surveyed vectors t, p_{45}, and $p_{43(k)}$, and (c) important runway and airport status information.

The data formatting routines **70(1)–(3)** respectively format the data in the data bases **72(1)–(3)** with the carrier and PRN phase data and phase velocity data received from the receiver **41**. The formatted data of the routines **70(1)–(3)** is respectively outputted to the mixing stages **66(1)–(3)** at a frequency of approximately 1000 bits per second.

The synthesizers **64(1)–(3)** are coupled to the reference oscillators **63(1)–(3)**. The synthesizers **64(1)–(3)** respectively use the reference frequency signal outputted by the oscillators **63(1)–(3)** for generating a clock signal and a GPS carrier signal.

The computers **62(1)–(3)** are coupled to and receive clock signals from the synthesizers **64(1)–(3)** respectively. Thus, the operation of the computers **62(1)–(3)** is therefore based on the oscillators **63(1)–(3)** respectively.

The PRN code generators **65(1(3)** are coupled to and receive clock signals from the synthesizers **64(1)–(3)** respectively. The PRN code generators **65(1)–(3)** respectively generate a unique unassigned PRN code from the received clock signals of the synthesizers **64(1)–(3)**.

The mixing stages **66(1)–(3)** are respectively coupled to the computers **62(1)–(3)**, the PRN code generators **65(1)–(3)** and the synthesizers **64(1)–(3)**. The mixing stages **66(1)–(3)** respectively modulate the data received from the data generators **62(1)–(3)** onto the PRN codes respectively received from the PRN code generators **65(1)–(3)**. The mixing stages **66(1)–(3)** then respectively convert the modulated PRN codes with the L-band carrier signals respectively received from the synthesizers **64(1)–(3)**. Thus, the GPS signals **27(1)–(2)** and **30** are respectively generated by the signal generators **42(1)–(3)** and **44**.

The amplifiers **67(1)–(30)** are respectively coupled to the mixing stages **66(1)–(3)** and respectively receive the GPS signals **27(1)–(2)** or **30**. The amplifiers **67(1)–(3)** then respectively amplify the GPS signals **27(1)–(2)** or **30**.

In the dual initialization configuration of FIG. **1**, the amplifiers **67(1)–(2)** respectively amplify the GPS signals **27(1)–(2)** at the same low power level. This power level is selected so that the broadcast radii of the two signal bubbles **28(1)–(2)** will overlap at a height which is larger than the nominal altitude (i.e. the normal altitude) for an estimated flight trajectory along the along track axis and between the pseudolite antennas **43(1)–(2)**.

In the preferred embodiment, the nominal altitude for a flight trajectory inside the signal bubbles **28(1)–(2)** will be approximately several hundred meters. As a result, the power used will be on the order of several μW so that signal bubbles **28(1)–(2)** have broadcast radii which overlap at a height greater than the preferred nominal altitude of several hundred meters.

In the single initialization pseudolite configuration of FIG. **8**, the amplifier **67** of the signal generator **42** amplifies the GPS signal **27** at a low power level. This power level is selected so that the broadcast radius of signal bubble **28** will be larger than the nominal altitude for an estimated flight trajectory along the along track axis over the signal bubble **28**.

As was the case in the dual pseudolite configuration, in the preferred embodiment, the nominal altitude for a flight trajectory inside the signal bubbles **28(1)–(2)** will be approximately several hundred meters. Thus, the power used will be on the order of several μW so that signal bubble **28(1)** will have a broadcast radius greater than the preferred nominal altitude of several hundred meters.

In the dual initialization pseudolite configuration of FIG. **1**, pseudolite antennas **43(1)–(2)** are at known locations, represented by the vectors $p_{43(k)}$, with respect to the refer-

ence antenna **40**. In the preferred embodiment, these antennas are located on each side of the along track axis approximately 100 meters apart in the cross track direction. Furthermore, these antennas are located approximately 1000 meters in front of the runway **23** threshold in the along track direction. But, in the single initialization pseudolite configuration of FIG. **8**, pseudolite antenna **43** will be preferably located approximately 1000 meters in front of the runway **23** on the along track axis.

Pseudolite antennas **43(1)–(2)** are respectively coupled to the amplifiers **67(1)–(2)** and respectively receive the GPS signals **27(1)–(2)**. The antennas **43(1)–(2)** then respectively broadcast the GPS signals **27(1)–(2)** as the low power signal bubbles **28(1)–(2)**.

As indicated earlier, pseudolite antenna **45** is at a known location, represented by the vector p_{45}, with respect to the reference antenna **40**. In the preferred embodiment, this location is approximately 1000 meters in front of the end of runway **23** on the along track axis.

Pseudolite antenna **45** is also coupled to the mixing stage **66(3)** of the signal generator **44** and receives the GPS signal **30** from it. The pseudolite antenna **45** broadcasts the GPS signal **30** as the signal beam **31**.

FIG. **14** shows another embodiment of the reference system **39**. The amplifiers **67(1)–(3)** are respectively coupled to the signal receiving block **50** of reference receiver **41** by the coaxial cables **68(1)–(3)**. Thus, the GPS signals **27(1)–(2)** and **30** are received by the reference receiver **41** directly from signal generators **42(1)–(2)** and **44** rather than from reference antenna **40**. As a result, reference antenna **40** need not be located within the signal bubbles **28(1)–(2)** in this configuration.

In this embodiment, reference receiver **41** has four signal paths. The first accommodates the GPS signals **25(1)–(4)** received from the antenna **40**. The second, third, and fourth respectively accommodate the GPS signals **27(1)–(2)** and **30** received respectively from the three coaxial cables **68(1)–(3)**.

Thus, in this embodiment the signal receiving block **67** has four signal receiving stages **53(1)–(4)** and the signal processing block **68** has four signal processing stages **54(1)–(4)**. The signal receiving stages **53(1)–(4)** are respectively coupled to the signal processing stages **54(1)–(4)**.

The signal receiving stage **53(1)** is coupled to antenna **40** for receiving GPS signals **25(1)–(4)**. The signal receiving stages **53(2)–(4)** are respectively coupled the coaxial cables **68(1)–(3)** for respectively receiving the GPS signals **27(1)–(2)** and **30**. Except for this difference, each of the signal receiving stages **53(1)–(4)** is otherwise configured and coupled in the same way and performs the same signal extracting and down converting functions as was earlier described for the signal receiving stage **53** of FIG. **11**. Moreover, each of the signal processing stages **54(1)–(4)** is configured and coupled in the same way and performs the same separating and information providing functions as was earlier described for the signal processing stage **54** of FIG. **13**.

Furthermore, in this embodiment, the integer ambiguities n_{30} and $n_{27(k)}$ are associated with the reference receiver **41** and the antenna **38**, rather than with reference antenna **40** and antenna **38**. And, the vectors $p_{43(k)}$ and p_{45} represent the distances from each of the signal generators **42(1)–(2)** and **44** to the reference receiver **41**, rather than the distances from the pseudolite antennas **43(1)–(2)** and **45** to the reference antenna **40**.

FIG. **15** shows still another embodiment of the reference system **39**. The configuration shown in FIG. **13** is the same as that in FIG. **13** except that the synthesizer **56** of reference receiver **41** is coupled to each of the signal generators **42(1)–(3)** respectively.

This connection replaces the oscillators **63(1)–(3)** and synthesizers **64(1)–(3)** of the signal generators **42(1)–(2)** and **44** respectively. Since the operations of reference receiver **41** and signal generators **42(1)–(2)** and **44** are now based on the same oscillator **55**, the clock synchronization errors $\Delta T_{42(k)}$ and ΔT_{44} are replaced by the single clock synchronization error ΔT_{41}. Thus, Equations (4), (5), (7), and (8) can be expressed as follows:

$$\Phi_{30/38} = r_{45/38} - n_{30/34} + \Delta T_{32} - \Delta T_{41} \quad (4)$$

$$\Phi_{30/40} = r_{45/40} - n_{30/40} \quad (5)$$

$$\Phi_{27(k)/38} = r_{43(k)/38} - n_{27(k)/34} + \Delta T_{32}\Delta T_{41} \quad (7)$$

$$\Phi_{27(k)/40} = r_{43(k)/40} - n_{27(k)/40} \quad (8)$$

Equations (5) and (8) in this configuration no longer include any clock synchronization errors. Unlike the case for the configurations of FIGS. **13** and **14**, the Equations (5) and (8) are no longer required for cancelling out the clock synchronization errors $\Delta T_{43(k)}$ and ΔT_{44} with the single phase relationships of Equations (6) and (9) respectively. Thus, the phase measurements $\Phi_{30/40}$ and $\Phi_{27(k)/40}$ and corresponding phase velocity measurements $\Phi_{25(i)/40}$ and $\Phi_{27(k)/40}$ need not be measured by receiver **41** and uplinked to receiver **32**. Furthermore, the values $r_{45/40}$, $n_{30/40}$, $r_{43(k)/40}$, and $n_{27(k)/40}$ need not be computed by receiver **32**. Thus, the values $\Phi_{30/40}$, $\Phi_{27(k)/40}$, $\Phi_{25(i)/40}$, $\Phi_{27(k)/40}$, $r_{45/40}$, $n_{30/40}$, $r_{43(k)/40}$, and $n_{27(k)/40}$ can be implicitly removed from consideration in the set of Equations (1)–(42) by setting them to zero.

This configuration has an advantage over the configuration of FIG. **13** in that the number of channels required by the signal processing block **51** is reduced by three. This stems from the fact that the carrier phase measurements for the three GPS signals **27(1)–(2)** and **30** need not be made.

This configuration also has an advantage over the configuration of FIG. **14** in that it eliminates the three signal receiving stages **53(2)–(4)** and the three signal processing stages **54(2)–(4)** needed for making the phase measurements for the GPS signals **27(1)–(2)** and **30**. It also eliminates the need for the coaxial cables **68(1)–(3)**.

FIG. **16** shows a variation of the embodiment in FIG. **15**. In this configuration, the receiver **41** and the signal generators **42(1)–(2)** and **44** are combined into a single transceiver **70**. The CPU **58** of computer **57** is directly coupled to the mixing stages **66(1)–(3)**. Furthermore, the synthesizer **56** is coupled to the mixing stages **66(1)–(3)** for providing the carrier components of the pseudolite signals **27(1)–(2)** and **30**. The synthesizer **56** is also coupled to the PRN code generators **65(1)–(3)** for providing the clock signals necessary in generating the PRN codes of the pseudolite signals **27(1)–(2)** and **30** respectively.

The computer memory **59** of computer **55** stores the signal processing routine **160**, the carrier phase measuring routine **161**, the PRN code measuring routine **162**, the phase velocity measuring routine **163**, the data formatting routine **164**, and the reference system data base **72**. In this configuration, the data formatting routine **164** formats the measurements made by the routines **161–163** with the data in the data base **72**.

In alternative arrangements to any of configurations in FIGS. **13–16**, the pseudolite signals **27(1)–(2)** and **30** need not be GPS signals. In this case, synthesizers **64** may generate carrier components for the pseudolite signals **27(1)**

–(2) or **30** at a frequency other than the GPS L1 frequency of 1.575 GHz. This may be done in order to avoid interference with the GPS signals **25(1)–(4)**. Furthermore, the pseduolite signals need not have PRN code components. Thus, signal generators **42(1)–(2)** or **44** need not include the PRN code generators **65(1)–(3)**. And finally, the pseudolite signals **27(1)–(2)** need not contain data components since the data component of the pseudolite signal **30** will suffice to provide receiver **32** with the all of information necessary for making precise position determinations. Therefore, the signal generators **42(1)–(2)** need not include the computers **62(1)–(2)** for providing formatted data to be modulated onto the carrier components of the signals **27(1)–(2)**.

But, in order to minimize hardware costs by utilizing existing GPS receiver technology, signal generators **42(1)–(2)** and **44** generate the pseudolite signals **27(1)–(2)** and **30** as GPS signals. Thus, the synthesizers **64** generate carrier components having a frequency of 1.575 GHz and the signal generators **42(1)–(2)** and **44** include PRN code generators **62**.

DETAILED DESCRIPTION OF MOBILE SYSTEM

FIGS. **17–21** provide detailed illustrations of the GPS mobile system **37** which makes up part of the entire GPS system **20**. The functions of the components of the mobile system **37**, in relation to the previously described equations, are better understood with reference to these figures.

FIG. **2** shows one embodiment of mobile system **37**. In this embodiment, mobile system **37** includes GPS position receiver **32**, GPS attitude receiver **33**, antennas **34**, **35(1)–(3)**, and **38**.

FIG. **17** provides a more detailed illustration of part of the configuration of FIG. **2**. This figure shows the relationship between antennas **34** and **38** and GPS receiver **32**.

The antenna **34** receives GPS signals **25(1)–(4)**. As was indicated earlier, its position with respect to the runway **23** threshold is given by the vector x.

The antenna **38** receives GPS signals **27(1)–(2)** and **30**. As was also indicated earlier, its position with respect to the runway **23** threshold is given by the vector y.

GPS position receiver **32** receives the GPS signals **25(1)–(4)**, **27(1)–(2)**, and **30** from the antennas **34** and **38**. Like the reference receiver **41**, it includes a signal receiving block **80**, a signal processing block **81**, a reference oscillator **85**, a synthesizer **86**, and a computer **87**.

In this configuration, the signal receiving block **80** comprises two signal receiving stages **83(1)–(2)**. The signal receiving stage **83(1)** is coupled to antenna **34** for receiving the GPS signals **25(1)–(4)**. The signal receiving stage **83(2)** is coupled to antenna **38** for receiving the GPS signals **27(1)–(2)** and **30**. The signal receiving stages **83(1)–(2)** are configured and coupled in the same way and perform the same signal extracting and down converting functions as was described earlier for the signal receiving stage **53** of the reference receiver **41** in FIG. **11**.

The signal processing block **81** includes two multichannel signal processing stages **84(1)–(2)**. The signal processing stages **84(1)–(2)** are respectively coupled to the signal receiving stages **83(1)–(2)**. The signal processing stages **84(1)–(2)** are configured and coupled in the same way, perform the same signal separating and phase locking functions, and generate the same type of phase and phase velocity information as was described earlier for the signal processing stage **53** of reference receiver **41** of FIG. **11**.

The computer **87** is coupled to each of the signal processing stages **84(1)–(2)**. It includes a central processing unit (CPU) **88** and a computer memory **89**.

The CPU **88** receives from the signal processing stages **84(1)–(2)** the information necessary for making the earlier described carrier phase and PRN code measurements and phase velocity measurements for each received GPS signal **25(1)–(4)**, **27(1)–(2)**, and **30**. Furthermore, the CPU **88** also receives from the signal processing block **81** the demodulated data components of the GPS signal **25(1)–(4)**, **27(1)–(2)**, and **30**.

The computer memory **89** stores the signal processing routine **190**, the carrier phase measuring routine **191**, the PRN code phase measuring routine **192**, the phase velocity measuring routine **193**, the coarse position generating routine **194**, the accurate position generating routine **195**, the GPS satellite unit directional vector computation routine **196**, the initialization routine **197** using just phase measurements, the initialization routine **198** using both phase measurements and phase velocity measurements, the precise position generating routine **199**, and the precise position integer hand-off routine **200**. Data generated by the routines **190–200** are stored in the data storage area **201** of the computer memory **89**. The CPU **88** is coupled to the computer memory **89** for receiving the routines **190–200** and the data in the data storage area **201**.

The signal processing routine **190** generates the signal processing control signals for controlling the carrier and PRN code phase locking operations of the signal processing block **81**. These control signals are outputted by the CPU **88** and received by the signal processing block **81**.

The carrier phase measuring routine **191** makes the phase measurements $\Phi_{25(i)/34}$, $\Phi_{30/38}$, and $\Phi_{27(k)/38}$ based on the information received from the signal processing block **81**. Thus, the routine **191** and the signal processing block **81** make up the carrier phase measuring component of the receiver **32**. As was indicated earlier, each of these carrier phase measurement includes both a fractional wavelength phase component Φ_{fr} and an integer wavelength phase change component Φ_{int}. These phase measurements are used by receiver **32** for making Carrier Phase Differential GPS position determinations.

The PRN code phase measuring routine **192** makes the PRN code phase measurements described earlier based on the information received from the signal processing block **81**. Thus, the routine **192** and the signal processing block **81** make up the PRN code phase measuring component of the receiver **32**. As was indicated earlier, these measurements are used by receiver **32** for Conventional GPS and Ordinary Differential GPS position determinations.

The Carrier phase velocity measuring routine **193** makes the phase velocity measurements $\Phi_{25(i)/34}$ and $\Phi_{27(k)/38}$ from the information received from the signal processing block **81**. Thus, the routine **193** and the signal processing **32** block **81** make up the carrier phase velocity measuring component of the receiver **32**. As was indicated earlier, each of these phase velocity measurements are used by receiver **32** for calculating the initialization values necessary for Carrier Phase Differential GPS position determinations.

The routines **191–193** issue their respective measurements at the same rate as is do the measurement routines in receivers **41** and **33**. This is done so that the carrier and PRN code phase measurements and the phase velocity measurements of receivers **41** and **33** can be synchronized with the carrier and PRN code phase measurements and phase velocity measurements of receiver **32**. As was discussed earlier, these carrier phase measurements are made by the routines **191–193** at the rate of approximately 1–10 Hz.

The coarse position generating routine **194** is called up by CPU **88** for coarse navigation when airplane **21** is out of

view of the pseudolites **26(1)–(2)** and **29**. The routine **194** computes position determinations using Conventional GPS to within tens of meters of the exact location. It generates these position determinations from (A) the PRN code phase measurements which were made for each of the CPS signals **25(1)–(4)** by signal processing block **81** and which were measured by the routine **192**, and (B) the GPS satellite position data in the data components of the GPS signals **25(1)–(4)** which were demodulated by signal processing block **81**.

The accurate position generating routine **195** is called up by CPU **88** for more accurate navigation when airplane **21** is in view of any of the pseudolites **26(1)–(2)** or **29**. The routine **195** generates position determinations using Ordinary Differential GPS to within several meters of the exact location. It does so by computing corrections for the PRN code phase measurements which were made for each of the GPS signals **25(1)–(4)** by the signal receiving block **81** and which were measured by the routine **192**. These corrections are computed from (A) the PRN code phase measurements which were made for GPS signals **25(1)–(4)** by receiver **41** and which were sampled and uplinked to receiver **32** by any of the pseudolites **26(1)–(2)** or **29**, (B) the known position of reference antenna **40** with respect to the coordinate system used to determine the positions of the GPS satellites **24(1)–(4)**, and (C) the GPS satellite position data in the data components or the GPS signals **25(1)–(4)** which were demodulated by the signal processing block **81**. The coarse position determinations of routine **195** are then computed in the same way as in routine **194** except that the computed corrections are applied.

The unit directional vector computation routine **196** computes the vectors $\hat{s}_{24(i)}$ in the manner described earlier. Thus, these vectors are computed from the satellite orbital positions received in the data components of the GPS signals **25(1)–(4)** and from the known location of reference antenna **40** in the coordinate system used to define the satellite orbital positions.

The initialization routine **197** generates the earlier described initialization values necessary for precise position determinations using Carrier Phase Differential GPS. This initialization routine **197** only employs the carrier phase measurements made by receivers **32** and **41** and involves a multiple step process.

The routine **197** first uses Equations (35) and, if applicable Equations (36) or/and (37) to compute in the manner described earlier the initialization values $N_{25(i)/27(1)}$, and if applicable, $N_{30/27(1)}$ or/and $N_{27(2)/27(1)}$. Thus, the routine initially computes these initialization values from (A) the measurements $\Phi_{25(i)/34}$ and $\Phi_{27(1)/38}$ and, if applicable $\Phi_{30/38}$ and $\Phi_{27(2)/38}$ made at a number of epochs during the initialization period by receiver **32**, (B) the measurements $\Phi_{25(i)/40}$ and $\Phi_{27(1)/40}$ and, if applicable $\Phi_{30/40}$ and $\Phi_{27(2)/40}$ made at the same epochs by receiver **41** and contained in the data component of pseudolite signal **30** and, if applicable, **27(1)** or/and **27(2)**, (C) the vector $\hat{s}_{24(i)}$ computed by routine **196**, (D) the coarse initial guess for position vector x_0 computed by the routine **195**, (E) the matrix A received from receiver **33**, and (F) the predetermined vectors t, k_{38}, $p_{43(k)}$, and p_{45} contained in the data component of the pseudolite signal **30** and if applicable, **27(1)** or/and **27(2)**. These values are recorded in data storage area **201** in such a way that the equations generated from Equation (33) and, if applicable, Equation (34) or/and (35), can be stacked in matrix form for simultaneously computing the initialization values $N_{25(i)/27(1)}$, and if applicable, $N_{30/27(1)}$ or/and $N_{27(2)/27(1)}$. Routine **197** uses the iterative process described earlier for computing these values.

Then, routine **197** uses Equation (32) and, if applicable Equations (33) or/and (34) to compute the initialization values $n_{25(i)}$ and, if applicable, n_{30} or/and $n_{27(k)}$. As a built integrity check, routine **197** checks to see that the values $n_{25(i)}$, n_{30}, $n_{27(k)}$ converge to integer values at each iteration or after the entire iterative process has been completed. These values are then stored in storage area **201** for use by the routines **199** and **200**.

The initialization routine **198** generates the initialization values necessary for precise position determinations using Carrier Phase Differential GPS. The initialization routine **198** employs both the carrier phase measurements and phase velocity measurements made by receivers **32** and **41** and involves a multiple step process.

The routine **198** first uses Equation (40) to compute the value $\Delta\dot{T}_{32}-\Delta\dot{T}_{41}$ at a number of epochs in the manner described earlier. Thus, the routine initially computes these initialization values from (A) the phase velocity measurements $\Phi_{25(i)/34}$ made at these epochs during the initialization period by receiver **32**, (B) the phase velocity measurements $\Phi_{25(i)/40}$ made at the same epochs by receiver **41** and contained in the data component of pseudolite signal **30** and, if applicable, **27(1)** or/and **27(2)**, and (C) the vector $\hat{s}_{24(i)}$ computed by routine **196**.

Then, routine **198** uses Equation (41) to compute the range rate $\dot{r}_{43(k)/38}$ at each epoch employed in the manner described earlier. Thus, the routine **198** computes this value from (A) the phase velocity measurement $\Phi_{27(k)/38}$ made by receiver **32**, (B) the phase velocity measurement $\Phi_{27(k)/40}$ made by receiver **41** and contained in the data component of pseudolite signal **30** and, if applicable, **27(1)** or/and **27(2)**, and (C) the value $\Delta\dot{T}_{32}-\Delta\dot{T}_{41}$ computed by routine **198**.

Next, routine **198** uses Equation (42) to compute the value $\delta\dot{r}$ at each epoch employed in the way described earlier. Thus, $\delta\dot{r}$ is computed from (A) the range rate $\dot{r}_{43(k)/38}$ at each of these epochs by routine **198**, and (B) the guess $\dot{r}_{0/43(k)/38}$ for the actual range rate $\dot{r}_{43(k)/38}$ which is computed by routine **198** at each of these epochs.

Routine **198** then computes δx from Equation (43) in the manner described earlier. Thus, it is computed from (A) the guess $\vec{r}_{0/43(k)/38}$ for the actual range vector $\vec{r}_{43(k)/38}$ computed from x_0, (B) the guess $\dot{r}_{0/43(k)/38}$ for the actual rate of change in $\vec{r}_{43(k)/38}$ computed from x_0, (C) the earlier described guess $r_{0/43(k)/38}$, and (D) the earlier computed value $\delta\dot{r}$. These values are stored in the storage area **200** so that after several epochs routine **197** can generate equations from Equation (41) which are stacked in matrix form for solving for the unknown vector δx. The calculation for δx is iteratively repeated until it converges to within a desired level. This is done by substituting the value of δx obtained in the previous iteration into Equation (37) and computing the vector x. This calculated vector x is then used as x_0 for the next iteration. The vector δx is then computed again from Equation (43) in the way just described and compared with the previously computed δx to see if it converged to within the desired level.

The guesses $\dot{r}_{0/43(k)/38}$, $\vec{r}_{0/43(k)/38}$, and $\dot{r}_{0/43(k)38}$ are computed by routine **198** from the vector relationship which corresponds to Equation (20). Thus, these guesses are computed from (A) a coarse position fix x_0 received from routine **195** at each epoch, (B) the matrix A computed by receiver **33**, and (C) the predetermined vectors t, k_{38}, and p_{45} contained in the data component of pseudolite signal **30** and, if applicable, **27(1)** or/and **27(2)**.

Then, routine **198** uses Equation (32) and, if applicable Equations (33) or/and (34) to compute the initialization values $n_{25(i)}$ and, if applicable, n_{30} or/and $n_{27(k)}$. As a built integrity check, routine **198** checks to see that the values $n_{25(i)}$, n_{30}, $n_{27(k)}$ converge to integer values at each iteration or after the entire iterative process has been completed. These values are then stored in storage area **201** for use by the routines **199** and **200**.

The precise position generating routine **199** is called up by CPU **88** for precise position determinations when airplane **21** is in view of the pseudolites **26(1)–(2)** and **29**. The routine **93** generates position determinations using Carrier Phase Differential GPS to within centimeters of the exact location.

The precise position routine **199** generates the precise position vector x using Equations (26) and, if applicable, Equation (27). Thus, the vector x is generated from (A) the measurements $\Phi_{25(i)/34}$ and $\Phi_{27(1)/38}$ and, if applicable $\Phi_{30/38}$ and $\Phi_{27(2)/38}$ made at a each epoch after the initialization period by receiver **32**, (B) the measurements $\Phi_{25(i)/40}$ and $\Phi_{27(1)/40}$ and, if applicable $\Phi_{30/40}$ and $\Phi_{27(2)/40}$ made at the same epochs by receiver **41**, (C) the vector $\hat{s}_{24(i)}$ computed by routine **196**, and (D) the initialization values $n_{25(i)}$ and, if applicable, n_{30}. Furthermore, for accurate landings, the precise position routine **199** can compute the precise position y of the bottom side antenna **38** using Equation (25). Thus, it computes this position from (A) the attitude matrix A computed by receiver **33**, (B) the computed vector x, and (C) the known vector k_{38}. For even greater accuracy in landing, routine **199** will compute the position of the landing gear in the same manner.

The integer hand-off routine **200** computes after the initialization period the integer ambiguities $n_{25(1)}$ and n_{30} for any GPS signals **25**(i) or **30** which were not in view during the initialization period or which were lost after this period. This is done by using Equation (26), or if applicable, Equation (27). Thus, the values for the new integer ambiguities $n_{25(i)}$ and, if applicable, n_{30}, are generated from (A) the measurements $\Phi_{25(i)/34}$ and $\Phi_{27(1)/38}$ and, if applicable $\Phi_{30/38}$ and $\Phi_{27(2(/38}$ made at an epoch of after the initialization period by receiver **32**, (B) the measurements $\Phi_{25(i)/40}$ and $\Phi_{27(1)/40}$ and, if applicable $\Phi_{30/40}$ and $\Phi_{27(2)/40}$ made at the same epoch by receiver **41**, (C) the victor $\hat{s}_{24(i)}$ computed by routine **196**, (D) the vector x computed by routine **199** at the same epoch, (E) the predetermined vector t and, if applicable, the vectors p_{45} and k_{38}, received from the data component of the GPS signal **30**, and, if applicable, (E) the matrix A. The routine **199** will then use these additionally computed integer ambiguities for computing the precise position vector x.

The synthesizer **86** and the reference oscillator **85** are coupled together. The synthesizer **86** is configured and coupled in the same way and generates the same type of down converting and clock signals as was described earlier for the synthesizer **56** of reference receiver **41** of FIG. **11**. The oscillator **85** is configured and coupled in the same way and generates the same type of reference frequency signal as was described earlier for the reference oscillator **55** of reference receiver **41** of FIG. **11**.

The clock signal generated by the synthesizer **85** is received by the signal processing stages **84(1)–(2)** and the CPU **88**: Since the CPU **88** and the signal processing stages **84(1)–(2)** operate based on the same clock source, the carrier phase measurements, PRN code phase measurements, and carrier phase velocity measurements made for each of the GPS signals **25(1)–(4)**, **27(1)–(2)**, and **30** are coherent (i.e. made at the same time) with respect to each other.

FIG. **18** provides another detailed illustration of part of the mobile system **37**. It shows the antennas **34** and **35(1)–(3)** and the GPS attitude receiver **33**.

Antennas **34** and **35(1)–(3)** receive GPS signals **25(1)–(4)**. As was indicated earlier, the positions of antennas **35(1)–(3)** with respect to antenna **34** are respectively given by the vectors $x_{35(1)}$, $x_{35(2)}$, and $x_{35(3)}$ in the runway coordinate system **46** and given by the vectors $k_{35(1)}$, $k_{35(2)}$, and $k_{35(3)}$ in the body coordinate system **47**.

The GPS attitude receiver **33** is coupled to GPS position receiver **32**. It computes the attitude matrix A using Carrier Phase Differential GPS. As was described earlier, the attitude matrix A is used by the routines **197** and **198** of receiver **32** in computing the initialization values described earlier and is used by routine **199** of receiver **32** in computing the precise position vector y.

GPS receiver **33** receives the GPS signals **25(1)–(4)** from each of the antennas **34** and **35(1)–(3)**. Like the reference receiver **41** and the position receiver **32**, it includes a signal receiving block **110**, a signal processing block **111**, a reference oscillator **115**, a synthesizer **116**, and a computer **117**.

In this configuration, the signal receiving block **110** comprises four signal receiving stages **113(1)–(4)**. The signal receiving stage **113(4)** is coupled to antenna **34** for receiving the GPS signals **25(1)–(4)**. The signal receiving stages **113(1)–(3)** are respectively coupled to antennas **35(1)–(3)** for also receiving the GPS signals **25(1)–(4)**. The signal receiving stages **113(1)–(4)** are otherwise configured and coupled in the same way and perform the same signal extracting and down converting functions as do the signal receiving stages **53(1)–(4)** and **83(1)–(2)** described earlier for reference receiver **41** and position receiver **32** respectively.

The signal processing block **111** includes four multichannel signal processing stages **114(1)–(4)**. The signal processing stages **114(1)–(4)** are respectively coupled to the signal receiving stages **113(1)–(4)**. The signal processing stages **114(1)–(4)** are configured and coupled in the same way, perform the same type of signal separating and phase locking functions, and generate the same type of phase and phase velocity information as do the signal processing stages **53(1)–(4)** and **83(1)–(2)**.

The computer **117** is coupled to each of the signal processing stages **114(1)–(4)**. It includes a central processing unit (CPU) **118** and a computer memory **119**.

The CPU **118** receives from the signal processing stages **114(1)–(4)** the raw carrier phase measurements for GPS signals **25(1)–(4)**.

The computer memory **119** stores the signal processing routine **120**, the carrier phase measuring routine **121**, the directional vector computation routine **122**, the static attitude initialization routine **123**, the motion based attitude initialization routine **124**, the attitude generating routine **125**, and the attitude integer ambiguity hand-off routine **126**. The computer memory also stores data generated from these routines **120–126** in the data storage area **127**. The CPU **118** is coupled to the computer memory **119** for receiving the routines **120–126** and the data in the data storage area **127**. The CPU **118** is also coupled to the CPU **88** of the GPS position receiver **32** for passing the computed attitude matrix A to the receiver **32**.

The signal processing routine **120** generates the signal processing control signals for controlling the carrier and PRN code phase locking operations of the signal processing block **111**. These control signals are outputted by the CPU **118** and received by the signal processing block **111**.

The carrier phase measuring routine **121** makes the phase measurements $\Phi_{25(i)/34}$ and $\Phi_{25(i)/35)(m)}$ based on the information received from the signal processing block **111**. Thus, the routine **121** and the signal processing block **111** make up the carrier phase measuring component of the receiver **33**. As was indicated earlier, each of these carrier phase measurement includes both a fractional wavelength phase component Φ_{fr} and an integer wavelength phase change component Φ_{int}. These phase measurements are used by receiver **33** for making Carrier Phase Differential GPS attitude determinations.

The routine **121** issues the phase measurements at the same rate as is do the measurement routines in receivers **41** and **32**. This is done so that the phase measurements and the phase velocity measurements of receivers **41** and **32** can be synchronized with the carrier phase measurements of receiver **33**. As was discussed earlier, these carrier phase measurements are made by the routine **121** at the rate of approximately 1–10 Hz.

The unit directional vector computation routine **122** computes the vectors $\hat{s}_{24(i)/34}$ in the manner described earlier. Thus, these vectors are computed from (A) the satellite orbital positions received in the data components of the GPS signals **25(1)–(4)**, and (B) the location of reference antenna **34** in the coordinate system used to define the satellite orbital positions computed by routine **122** from Conventional GPS or Ordinary Differential GPS.

The static attitude initialization routine **123** when selected computes the initialization values $n_{25(i)/34/35(m)}$ from Equation (48) in the manner described earlier. Thus, routine **123** is responsive to (A) the measurements $\Phi_{25(i)/34}$ and $\Phi_{25(i)/35(m)}$ made by routine **122** over several epochs, and (B) the directional vectors $\hat{s}_{24(i)/34}$ computed by routine **122**. Since routine **123** records these values so that Equation (43) is stacked in matrix form, the values $n_{25(i)/34/35(m)}$ can be simultaneously solved. These initialization values $n_{25(i)/34/35(m)}$ are then stored in the data storage area **127** for use by the attitude determination routine **125**. As a built in integrity check, these values are checked to see that they converge to integer values.

The motion based attitude initialization routine **124** when selected also computes the initialization values $n_{25(i)/34/35(m)}$ in the manner described earlier. This requires a multiple step process.

First, routine **124** initially computes the vectors $\Delta b_{35(m)}$ using Equation (50) in the manner described earlier. Routine **124** records in data storage area **127** the measurements $\Phi_{25(i)/34}$ and $\Phi_{25(i)/35(m)}$ made by routine **122** at an initial epoch. Then, at a number of succeeding epochs routine **124** computes the vectors $\Delta b_{35(m)}$ from (A) the measurements $\Phi_{25(i)/34}$ and $\Phi_{25(i)/35(m)}$ recorded at the initial epoch and made at these succeeding epochs, and (B) the unit directional vectors $\hat{s}_{24(i)/34}$ computed by routine **122**.

Routine **124** then computes the baseline vectors $b_{35(m)}$ from Equation (53). These values are generated from (A) measurements $\Phi_{25(i)/34}$ and $\Phi_{25(i)/35(m)}$ made by routine **122** at the epochs employed, (B) the vectors $\Delta b_{35(m)}$ computed from Equation (43) at each of the epochs employed after the initial epoch, and (C) the unit directional vectors $\hat{s}_{24(i)/34}$ computed by routine **122**. Routine **124** records those values in the data storage area **127** so that Equation (53) is stacked in matrix form. As a result, the baseline vectors $b_{35(m)}$ can be simultaneously solved and stored in the data storage area **127**.

Once the baseline vectors $b_{35(m)}$ are computed, routine **124** computes the values $n_{25(i)/34/35(m)}$ from Equation (48). Thus, these values are generated by routine **124** from (A) the measurements $\Phi_{25(i)/34}$ and $\Phi_{25(i)/35(m)}$ made by routine **122** and recorded at the initial epoch, (B) from the baseline vectors $b_{35(m)}$ computed and stored in storage area **127**, and (C) the unit directional vectors $\hat{s}_{24(i)/34}$ computed by routine **122**. The computed initialization values $n_{25(i)/34/35(m)}$ are then stored in data storage area **127** for use by the attitude determination routine **125**. As a built in integrity check, the values $n_{25(i)/34/35(m)}$ can be checked to see that they converge to integer values.

The attitude determination routine **125** computes the attitude matrix A at each epoch in the manner described earlier. This involves a five step process.

First, routine **125** computes at each epoch the differential ranges $\Delta r_{24(i)/34/35(m)}$ using Equation (44). Thus, these differential ranges $\Delta r_{24(i)/34/35(m)}$ are computed from (A) the measurements $\Phi_{25(i)/34}$ and $\Phi_{25(i)/35(m)}$ made by routine **122** at each epoch, (B) the initialization values $n_{25(i)/34/35(m)}$ computed by routines **123** or **124**, and (C) the unit directional vectors $\hat{s}_{24(i)/34}$ computed by routine **122**.

Routine **125** computes the initial estimate A_0 at each epoch by minimizing Equation (60). Thus, the initial estimate A_0 is generated by routine **125** from (A) the predetermined measurement weights $w_{35(m)/24(i)}$, (B) the differential ranges $\Delta r_{24(i)/34/35(m)}$ computed by routine **125**, (C) the known vectors $k_{35(m)}$, and (D) the unit directional vectors $\hat{s}_{24(i)}$ computed by routine **122**.

The routine **125** then computes the vector $\delta\Theta$ at each epoch by minimizing the Equation (66). Thus, the vector $\delta\Theta$ is generated by routine **125** from (A) the predetermined measurement weights $w_{35(m)/24(i)}$, (B) the differential ranges $\Delta_{r24(i)/34/35(m)}$ computed by routine **125**, (C) the initial estimate A_0 computed by routine **125**, (D) the matrix $B_{35(m)}{}^{x}$ computed by routine **125**, and (E) the computed unit directional vectors $\hat{s}_{24(i)/34}$.

Routine **125** then computes the matrix Θ^x using Equation (65). Thus, the matrix Θ^x is generated by routine **125** from the elements of the computed vector $\delta\Theta$.

The routine **125** then computes the correctional matrix δA using Equation (63). As a result, the matrix δA is generated by routine **125** from the computed matrix Θ^x.

The routine **125** then computes the matrix A using Equation (63). Thus, matrix A is generated by routine from the computed correctional matrix δA.

The routine **125** repeats this process iteratively until the value for A converges to within a desired level. As was discussed earlier, this is done by substituting the estimate matrix A from the previous iteration into Equation (66) as the matrix A_0 for the next iteration. The new estimate A is then computed and compared with the estimate A from the previous iteration. This process is continued until the estimate for A converges to within the desired level.

The integer hand-off routine **126** computes after the initialization period the integer ambiguities $n_{25(i)/34/35(m)}$ for any GPS signals **25**(i) which were not in view during the initialization period or which were lost after this period. This is done by using Equation (59). Thus, the values for the new integer ambiguities $n_{25(i)/34/35(m)}$ are generated from (A) the measurements $\Phi_{25(i)/34}$ and $\Phi_{25(i)/35(m)}$ made at an epoch, (B) the known vectors $k_{35(m)}$, and (C) the known attitude matrix A computed by routine **125**. The routine **125** will then use these additionally computed integer ambiguities in computing the attitude matrix A.

The synthesizer **116** and the reference oscillator **115** are coupled together. The synthesizer **116** is configured and

coupled in the same way and performs the same down converting and clock signal generating functions as do the synthesizers **56** and **86**. The oscillator **115** is configured and coupled in the same way and performs the same reference frequency signal generating functions as does the reference oscillator **55** and **85**.

The clock signal generated by the synthesizer **116** is received by the signal processing stage **114** and the CPU **118**. Since the CPU **118** and the signal processing stage **114** operate based on the same clock source, the carrier phase measurements made for each of the GPS signals **25(1)–(4)** are coherent (i.e. made at the same time) with respect to each other.

FIG. **19** shows an alternative embodiment for the airborne components of system **20**. In this configuration, there is a single GPS receiver **32** which computes both position determinations and attitude determinations.

Receiver **32** now has five signal paths. The first accommodates the GPS signals **25(1)–(4)** received from the antenna **34**. The second, third, and fourth signal paths respectively accommodate the GPS signals **25(1)–(4)** received by the antennas **35(1)–(3)**. And, the fifth accommodates the GPS signals **27(1)–(2)** and **30** received from the antenna **38**.

Thus, in this embodiment the signal receiving block **80** has five signal receiving stages **83(1)–(5)** and the signal processing block **81** has five signal processing stages **84(1)–(5)**. The signal receiving stages **83(1)–(5)** are respectively coupled to the signal processing stages **84(1)–(5)**.

The signal receiving stages **83(1)–(5)** are respectively coupled to the antennas **34**, **35(1)–(3)**, and **38**. Except for this difference, each of the signal receiving stages **83(1)–(5)** is otherwise configured and coupled in the same way and performs the same signal extracting and down converting functions as was earlier described for the signal receiving stage **53** of FIG. **11**. Moreover, each of the signal processing stages **84(1)–(5)** is configured and coupled in the same way, perform the same type of separating and phase locking functions, and generate the same type of phase and phase velocity information as was described earlier for the signal processing stage **54**.

Furthermore, computer memory **89** of computer **87** stores in this configuration the signal processing routine **190**, the carrier phase measuring routine **191**, the PRN code phase measuring routine **192**, the phase velocity measuring routine **193**, the coarse position generating routine **194**, the accurate position generating routine **195**, the unit directional vector computing routines **196** and **122**, the initializing routines **196** and **197**, the precise position generating routine **198**, the precise position hand-off routine **199**, the static attitude initialization routine **123**, the motion based attitude initialization routine **124**, the altitude generating routine **125**, and the attitude integer hand-off routine **126**. The computer memory also stores data generated from these routines **190–200** and **122–126** in the data storage area **201**. The CPU **88** is coupled to the computer memory **89** for receiving the routines **190–200** and **122–126** and the data in the data storage area **201**.

FIG. **20** shows another embodiment for the airborne components of system **20**. In this configuration, an inertial measurement unit (IMU) **130** has been substituted for the GPS attitude receiver **33**. The IMU **130** is coupled to the CPU **88** of receiver **32**.

In one embodiment, the IMU **130** can directly provide receiver **32** with the computed attitude matrix A. Alternatively, the computer memory **89** can store a routine **131** for converting the attitude parameters yaw, pitch, and roll supplied by the IMU **130** into the matrix A.

FIG. **21** shows another embodiment for the airborne components of system **20**. In this configuration, only a single antenna **34** and a single receiver **32** are mounted on airplane **21**. Receiver **32** now has only one signal path. It accommodates the GPS signals **25(1)–(4)**, **27(1)–(2)**, and **30** all received from the antenna **34**.

Thus, in this embodiment the signal receiving block **80** has a single receiving stage **83** and the signal processing block **81** has a single signal processing stages **84**. The signal receiving stage **83** is coupled to the signal processing stage **84**.

The signal receiving stage **83** is coupled to the antenna **34**. Except for this difference, the signal receiving stage **83** is otherwise configured and coupled in the same way and performs the same signal extracting and down converting functions as was earlier described for the signal receiving stage **53** of FIG. **11**. Moreover, the signal processing stage **84** is configured and coupled in the same way, performs the same type of separating and phase locking functions, and generates the same type of phase and phase velocity information as was described earlier for the signal processing stage **54**.

The computer **87** is coupled to the signal processing stage **83**. It otherwise is coupled in the same way and stores the same routines as was described earlier for the receiver **32** of the embodiment of FIG. **2**.

CONCLUSION

Many of the individual elements of the components of system **20** are known in the art. In fact, many are found in commercially available products.

Specifically, the GPS antennas **34**, **35(1)–(3)**, **38**, **40** and **43(1)–(2)** are of the type commonly known as standard hemispherical microstrip patch antennas. The GPS antenna **45** is of the type commonly known as a standard helical antenna.

The signal receiving stages **53(1)–(4)**, **83(1)–(5)**, and **113(1)–(4)**, the signal processing stages **54(1)–(4)**, **84(1)–(5)**, and **114(1)–(4)**, the synthesizers **55**, **85** and **115**, the oscillators **56**, **86**, and **116**, and the computers **57**, **87**, and **117** and their respective signal processing routines **160**, **190**, and **120**, carrier phase measuring routines **161**, **191**, and **121**, PRN code phase measuring routines **162** and **192**, phase velocity measuring routines **163** and **193** may be of the type commonly found in a Trimble 4000 Series GPS receiver.

The reference oscillators **63(1)–(3)**, the synthesizers **64(1)–(3)**, the PRN code generators **65(1)–(3)**, the mixing stages **66(1)–(3)**, and the amplifiers **67(1)–(3)** may be commonly found in a GS-100 signal generator produced by Welnavigate.

Although these figures and the accompanying description are provided in relation to an airplane, one skilled in the art would readily understand that the invention is applicable to Carrier Phase Differential Position determinations for any land, sea, air, or space vehicle. Furthermore, while the present invention has been described with reference to a few specific embodiments, the description is illustrative of the invention and is not to be construed as limiting the invention. Indeed, various modifications may occur to those skilled in the art without departing from the true spirit and scope of the invention as defined by the appended claims.

What is claimed is:

1. A method of resolving integer wavelength ambiguities associated with phase measurements made for GPS carrier

signals transmitted by GPS satellites, the method being used with an aircraft on a final approach trajectory to a runway, the method comprising the steps of:

positioning one or more pseudolites each at a fixed known location *with respect to a reference coordinate system* in front of the runway below the final approach trajectory of the aircraft;

with the one or more pseudolites, transmitting one or more pseudolite carrier signals;

with a mobile GPS receiver system mounted on the aircraft:

receiving the transmitted one or more pseudolite carrier signals and the transmitted GPS carrier signals;

making phase measurements for the received one or more pseudolite carrier signals and the received GPS carrier signals at measurement epochs while the aircraft is on the final approach trajectory, there being an integer wavelength ambiguity associated with the phase measurements made for each of the received GPS carrier signals;

determining directions to the GPS satellites with respect to the reference coordinate system at the measurement epochs; and

resolving the integer wavelength ambiguities in response to the phase measurements, the known location of each of the one or more pseudolites, and the determined [lines of sight] *directions* to the GPS satellites.

2. The method of claim **1** wherein:

the final approach trajectory has an along track component;

the one or more pseudolites comprise two pseudolites further positioned in the positioning step on opposite sides of the along track component of the final approach trajectory.

3. The method of claim **1** wherein:

each of the one or more pseudolite carrier signals is transmitted in the pseudolite carrier signal transmitting step as a low power signal bubble;

the phase measurements are made in the phase measurement making step while the aircraft flies through the one or more low power signal bubbles on the final approach trajectory.

4. The method of claim **3** wherein each of the one or more pseudolite carrier signals is transmitted in the transmitting step with a pseudo-random code signal as an L1 C/A GPS signal.

5. The method of claim **1** wherein:

the mobile receiver system comprises a top side antenna mounted on top of the aircraft and a bottom side antenna mounted on bottom of the aircraft;

the GPS carrier signals being received in the receiving step with the top side antenna;

the one or more pseudolite carrier signals being received in the receiving step with the bottom side antenna.

6. The method claim **1** wherein:

the phase measurements are made in the phase measurement step during a period in which the aircraft flies over the one or more pseudolites on the final approach trajectory and a large angular change in geometry occurs between the mobile GPS receiver system and the one or more pseudolites;

the integer ambiguities are resolved in the resolving step [with] *without searching through a set of potential solutions by* batch processing of (A) the phase measurements, (B) the known location of each of the one or more pseudolites, and (C) the determined directions to the GPS satellites.

7. The method claim **6** wherein:

the mobile GPS receiver has undetermined positions with respect to the reference coordinate system at the measurement epochs;

the integer wavelength ambiguities are resolved with the batch processing in the resolving step based on a set of simultaneous equations that relate (A) the phase measurements, (B) the known location of each of the one or more pseudolites, (C) the determined directions to the GPS satellites, (D) the integer wavelength ambiguities, and (E) the undetermined positions of the mobile GPS receiver system, the number of the measurement epochs and the pseudolite and GPS carrier signals being such that the set of simultaneous equations is overdetermined.

8. The method of claim **7** further comprising the step of:

with the mobile GPS receiver system, computing initial guesses for the undetermined positions of the mobile GPS receiver system;

the set of simultaneous equations comprising a set of non-linear equations that are linearized so that the undetermined positions of the mobile GPS receiver system are represented as estimates and precise differences between the estimates and the undetermined positions;

the integer wavelength ambiguities being iteratively resolved with the batch processing in the resolving step by (A) resolving the integer wavelength ambiguities and computing the [corrections] *precise differences* in iterations based on the set of simultaneous equations, (B) in an initial one of the iterations, using the initial guesses as the estimates, and (C) in each subsequent one of the iterations, using as the estimates the estimates used in a directly preceding one of the iterations adjusted by the precise differences computed in the directly preceding one of the iterations.

9. A method of resolving integer wavelength ambiguities associated with phase measurements made for GPS carrier signals transmitted by GPS satellites, the method comprising the steps of:

positioning one or more pseudolites each at a fixed known location with respect to a reference coordinate system;

with the one or more pseudolites, transmitting one or more pseudolite carrier signals;

with a mobile GPS receiver system:

receiving the transmitted one or more pseudolite carrier signals and the transmitted GPS carrier signals;

making phase measurements for the received one or more pseudolite carrier signals and the received GPS carrier signals at measurement epochs while a large angular change in geometry occurs between the mobile GPS receiver system and the one or more pseudolites, there being an integer wavelength ambiguity associated with the phase measurements made for each of the received GPS carrier signals;

determining directions to the GPS satellites with respect to the reference coordinate system at the measurement epochs; and

resolving the integer wavelength ambiguities in response to the phase measurements, the known location of each of the one or more pseudolites, and the determined [lines of sights] *directions* to the GPS satellites.

10. The method claim **9** wherein the integer ambiguities are resolved in the resolving step [with] *without searching through a set of potential solutions by* batch processing of (A) the phase measurements, (B) the known location of each of the one or more pseudolites, and (C) the determined directions to the GPS satellites.

11. The method claim **10** wherein:

the mobile GPS receiver has undetermined positions with respect to the reference coordinate system at the measurement epochs;

the integer wavelength ambiguities are resolved with the batch processing in the resolving step based on a set of simultaneous equations that relate (A) the phase measurements, (B) the known location of each of the one or more pseudolites, (C) the determined directions to the GPS satellites, (D) the integer wavelength ambiguities, and (E) the undetermined positions of the mobile GPS receiver system, the number of the measurement epochs and the pseudolite and GPS carrier signals being such that the set of simultaneous equations is overdetermined.

12. The method of claim **11** further comprising the step of:

with the mobile GPS receiver system, computing initial guesses for the undetermined positions of the mobile GPS receiver system;

the set of simultaneous equations comprising a set of non-linear equations that are linearized so that the undetermined positions of the mobile GPS receiver system are represented as estimates and precise differences between the estimates and the undetermined positions;

the integer wavelength ambiguities being iteratively resolved with the batch processing in the resolving step by (A) resolving the integer wavelength ambiguities and computing the precise differences in iterations based on the set of simultaneous equations, (B) in an initial one of the iterations, using the initial guesses as the estimates, and (C) in each subsequent one of the iterations, using as the estimates the estimates used in a directly preceding one of the iterations adjusted by the precise differences computed in the directly preceding one of the iterations.

13. The method of claim **9** wherein:

the mobile GPS receiver system is mounted on an aircraft on a final approach trajectory to a runway; and

each of the one or more pseudolites is positioned in the positioning step in front of the runway below the final approach trajectory;

the phase measurements are made in the phase measurement step during a period in which the aircraft flies over the one or more pseudolites on the final approach trajectory and the large angular change in geometry occurs.

14. The method of claim **13** wherein:

the final approach trajectory has an along track component;

the one or more pseudolites comprise two pseudolites further positioned in the positioning step on opposite sides of the along track component of the final approach trajectory.

15. A method of making position determinations for a mobile GPS receiver system mounted on an aircraft on a final approach trajectory to a runway, the method comprising the steps of:

positioning one or more pseudolites each at a fixed known location *with respect to a reference coordinate system* in front of the runway below the final approach trajectory of the aircraft;

with the one or more pseudolites, transmitting one or more pseudolite carrier signals;

with a GPS reference system:

receiving GPS carrier signals transmitted by GPS satellites at a fixed known reference location with respect to the reference coordinate system;

transmitting reference phase information associated with the GPS carrier signals received with the GPS reference system;

with the mobile GPS receiver system:

receiving the transmitted one or more pseudolite carrier signals, the transmitted GPS carrier signals, and the transmitted reference phase information;

making phase measurements for the one or more pseudolite carrier signals and the GPS carrier signals received with the mobile GPS receiver system at measurement epochs during an initialization period while the aircraft is on the final approach trajectory and making phase measurements for the GPS carrier signals received by the mobile GPS receiver system at measurement epochs after the initialization period while the aircraft is still on the final approach trajectory, there being an integer wavelength ambiguity associated with the phase measurements made for each of the GPS carrier signals;

determining directions to the GPS satellites with respect to the reference coordinate system at the measurement epochs during and after the initialization period;

resolving the integer wavelength ambiguities in response to (A) the phase measurements made at the measurement epochs during the initialization period, (B) the known location of each of the one or more pseudolites, (C) the reference phase information received during the initialization period, and (D) the determined directions to the GPS satellites at the measurement epochs during the initialization period; and

computing positions for the mobile GPS receiver system with respect to the reference coordinate system at the measurement epochs after the initialization period in response to (A) the resolved integer ambiguities, (B) the phase measurements made at the measurement epochs after the initialization period, (C) the reference phase information received after the initialization period, and (D) the determined [lines of sight] *directions* to the GPS satellites at the measurement epochs after the initialization period.

16. The method or claim **15** wherein the reference phase information is transmitted in the reference phase information transmitting step from a fixed different location than the known location of each of the one or more pseudolites so that the transmitted reference phase information is received with the mobile GPS receiver system during and after the initialization period while the aircraft is on the final approach trajectory.

17. The method of claim **15** further comprising the step of:

with the GPS reference system, making phase measurements for the GPS carrier signals received with the GPS reference system at the measurement epochs during and after the initialization period;

the reference phase information transmitted during and after the initialization period in the reference phase information transmitting step comprising the phase

measurements made during and after the initialization period with the GPS reference system.

18. The method of claim **15** wherein:

the final approach trajectory has an along track component;

the one or more pseudolites comprise two pseudolites further positioned in the positioning step on opposite sides of the along track component of the final approach trajectory.

19. The method of claim **15** wherein:

each of the one or more pseudolite carrier signals is transmitted in the pseudolite carrier signal transmitting step as a low power signal bubble;

the phase measurements made in the phase measurement making step during the initialization period are made while the aircraft flies through the low power signal bubbles on the final approach trajectory.

20. The method of claim **19** wherein each of the one or more pseudolite carrier signals is transmitted in the transmitting step with a pseudo-random code signal as an L1 C/A GPS signal.

21. The method of claim **15** wherein:

the mobile receiver system comprises a top side antenna mounted on top of the aircraft and a bottom side antenna mounted on bottom of the aircraft;

the GPS carrier signals being received with the top side antenna in the receiving step with the mobile GPS receiver system;

the one or more pseudolite carrier signals being received with the bottom side antenna in the receiving step with the mobile GPS receiver system.

22. The method of claim **15** wherein the phase measurements made in the phase measurement step during the initialization period are made while the aircraft flies over the one or more pseudolites on the final approach trajectory and a large angular change in geometry occurs between the mobile GPS receiver system and the one or more pseudolites.

23. The method of claim **22** wherein the integer ambiguities are resolved in the resolving step **[**with**]** *without searching through a set of potential solutions by* batch processing of (A) the phase measurements made at the measurement epochs during the initialization period, (B) the known location of each of the one or more pseudolites, (C) the reference phase information received during the initialization period, and (D) the determined directions to the GPS satellites at the measurement epochs during the initialization period.

24. The method claim **23** wherein:

the mobile GPS receiver has undetermined positions with respect to the reference coordinate system at the measurement epochs during the initialization period;

the integer wavelength ambiguities are resolved with the batch processing in the resolving step based on a set of simultaneous equations that relate (A) the phase measurements made at the measurement epochs during the initialization period, (B) the known location of each of the one or more pseudolites, (C) the reference phase information received during the initialization period, (D) the determined directions to the GPS satellites at the measurement epochs during the initialization, (E) the integer wavelength ambiguities, and (F) the undetermined positions of the mobile GPS receiver system at the measurement epochs during the initialization period, the number of the measurement epochs and the pseudolite and GPS carrier signals being such that the set of simultaneous equations is overdetermined.

25. The method of claim **24** further comprising the step of:

with the mobile GPS receiver system, computing initial guesses for the undetermined positions of the mobile GPS receiver system;

the *set of* simultaneous equations comprising *a set of* non-linear equations that are linearized so that the undetermined positions of the mobile GPS receiver system are represented as estimates and precise differences between the estimates and the undetermined positions;

the integer wavelength ambiguities being iteratively resolved with the batch processing in the resolving step by (A) resolving the integer wavelength ambiguities and computing the **[**corrections**]** *precise differences* in iterations based on the set of simultaneous **[**linearized non-linear**]** equations, (B) in an initial one of the iterations, using the initial guesses as the estimates, and (C) in each subsequent one of the iterations, using as the estimates the estimates used in a directly preceding one of the iterations adjusted by the precise differences computed in the directly preceding one of the iterations.

* * * * *