Nov. 10, 1931. A. SURDOCK 1,831,327

MANICURE SET

Filed Nov. 5, 1930

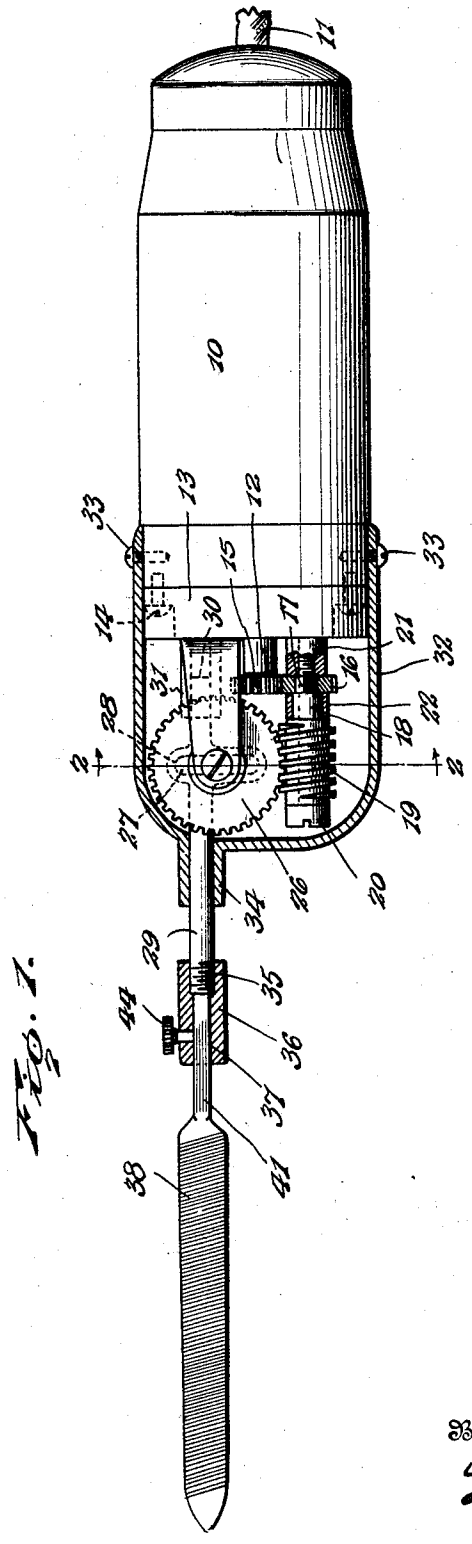

Fig. 1.

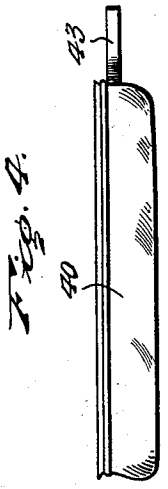

Fig. 4.

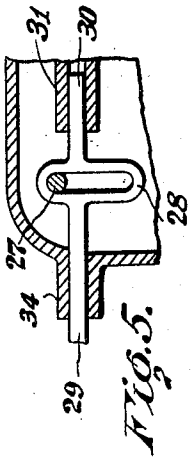

Fig. 5.

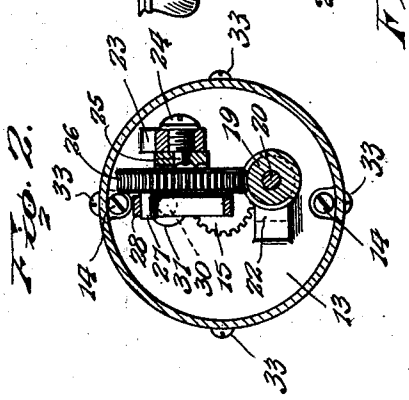

Fig. 2.

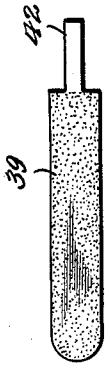

Fig. 3.

Inventor

A. Surdock.

By Lacey & Lacey, Attorneys

Patented Nov. 10, 1931 1,831,327

UNITED STATES PATENT OFFICE

ANTHONY SURDOCK, OF NORTH ARLINGTON, NEW JERSEY

MANICURE SET

Application filed November 5, 1930. Serial No. 493,619.

This invention relates to manicure sets.

One object of the invention is to provide a portable or hand motor for power driving a manicure file, sand paper, or buffer, these manicuring implements being selectively secured as desired on a shaft which is reciprocated by the motor.

A further object of the invention is to provide a portable or hand motor having a novel reduction gearing and yoke for actuating the manicure implements, the gearing and yoke being housed in a cap which forms an extension of the motor casing, the entire assembly being small, compact and light in weight so as to be easily and conveniently manipulated by the manicurist.

With the above and other objects in view the invention consists in certain novel details of construction and combinations of parts hereinafter fully described and claimed, it being understood that various modifications may be resorted to within the scope of the appended claims without departing from the spirit or sacrificing any of the advantages of the invention.

In the accompanying drawings forming part of this specification:

Figure 1 is a side elevation with parts in section of the motor, reduction gearing and file.

Fig. 2 is a cross sectional view taken on the line 2—2 of Fig. 1,

Fig. 3 is a plan view of the sand paper, and

Fig. 4 is a side elevation of the buffer.

Fig. 5 is a detail side elevation showing the reciprocating shaft and bearings therefor, as well as the eccentric pin for operating the yoke of the shaft.

Referring now to the drawings in which like characters of reference designate similar parts in the various views, 10 designates a portable or hand motor of the usual type used in barber shops and beauty parlors, the same being adapted to be connected by a suitable cable 11 to a wall plug or similar connection in the usual manner. The driven shaft 12 of the motor projects as usual through an axial opening in the end of the motor casing, which latter forms a grip or handle for manipulating the device.

In carrying out the invention, I provide a disk base 13 which is fixed to the end of the motor casing preferably by screws 14, and this base removably secures the reduction gearing, about to be described, to the motor.

The motor shaft 12 projects through the base and is equipped at the end with a pinion 15. The pinion 15 meshes with and drives a pinion 16 which is carried on the square shoulder 17 of a sleeve 18 which is terminally equipped with a worm 19. A screw 20 is passed through the worm and sleeve and threaded at the end into a boss 21 which is integral with the disk base 13. The screw thus performs the function of a shaft on which the worm 19 and pinion 16 are loosely mounted to be driven as a unit by the motor shaft pinion 15. A bearing 22 integral with the base 13 rotatably receives the sleeve 18.

Also formed integral with the base 13 there is a bracket 23 into which is threaded a screw 24, the end of which is uniformly reduced and formed smooth to provide a stub shaft 25 to which is keyed or otherwise suitably secured a worm gear 26 which meshes with and is driven by the worm 19. The worm gear is provided in the front face thereof with an eccentric pin 27.

A yoke 28 receives the eccentric pin 27, the yoke, as usual, carrying at opposite sides thereof a shaft 29 and a shaft 30, the latter being reciprocably mounted in the bore of a hollow guide lug 31 which is integral with the base 13. As will be understood, the worm gear 26, through the instrumentality of the pin 27, reciprocates the yoke 28 and shaft 29.

A housing 32 is provided for the above described reduction gear and yoke mechanism, the housing being open at the rear end to receive the base 13 and front end portion of the portable hand motor 10, as best shown in Fig. 1. The housing is detachably secured in place preferably by screws 33. The front end of the housing is provided with a bearing 34 through which the shaft 29 passes.

By now referring to Fig. 1, it will be seen that the end of the reciprocating shaft 29 is threaded, as shown at 35, to receive a collar 36, the collar being provided with a bore 37.

The manicure implements, such as the file

38, sand paper 39, or buffer 40, are selectively secured to the reciprocating shaft 29 by means of the collar 36, each implement having a corresponding shank, designated respectively by the numerals 41, 42 and 43, which is receivable in the bore 37 of the collar. A set screw 44 is screwed into the side of the collar and abuts the shank of any particular manicure implement to removably secure the implement in place.

From the above description it will be seen that a motor driven manicure set is provided which is light, strong and durable, and in which the manicuring implements may be selectively power operated.

It is thought that the construction and operation of the invention will be clearly understood without further description.

It will be apparent, however, that by unscrewing the collar 36 and removing the screws 33 of the housing, the housing may be slipped longitudinally off of the reciprocating shaft 29 to expose the combined reduction gear and yoke mechanism for inspection and repairs. It will also be pointed out that when the housing is removed, by simply removing the screws 14 which attach the base to the motor casing, the reduction gear and yoke mechanism may be removed bodily as a unit with the base from the motor casing for repairs.

Having thus described the invention, I claim:

1. A power driven manicure set comprising in combination, an electric portable hand motor, a casing therefor through which the motor shaft projects, a disk base secured to the end of the casing, a bracket on the disk base, a reciprocating shaft, a plurality of manicure implements adapted to be selectively secured to the reciprocating shaft, a combined yoke and reduction gear mechanism carried by the bracket and operatively connecting the motor shaft to the reciprocating shaft, and a cap forming a housing for said mechanism having an open end removably secured to the motor casing and having a bearing in the opposite end for the reciprocating shaft.

2. A power driven manicure set comprising in combination, an electric portable hand motor, a disk base removably secured to the motor, the shaft of the motor projecting through the base, a bearing on said base, a bracket on said base, a worm carried by the bearing geared to the motor shaft, a worm gear carried by the bracket meshing with the worm, an eccentric pin on the outer face of the gear, a guide lug carried by the base, a yoke receiving the eccentric pin, a guide shaft projecting from one side of the yoke and reciprocating in said guide lug, a shaft projecting from the opposite side of the yoke and reciprocated by the yoke, a plurality of manicure implements adapted to be selectively secured to the reciprocating shaft, and a housing for said mechanism removably secured to the motor and having a bearing for said reciprocating shaft.

3. A power driven manicure set comprising in combination, an electric portable hand motor having a casing through which the motor shaft projects, a reciprocating shaft, a collar screwed onto said reciprocating shaft, a plurality of manicure implements having shanks selectively receivable in said collar, a set screw carried by the collar for binding said shanks to said collar, a disk base secured to the end of said casing, a bracket carried by the base, a combined yoke and reduction gear mechanism carried by the bracket operatively connecting the motor shaft to the reciprocating shaft, and a cap forming a housing for said mechanism having an open end removably secured to the motor casing and having a bearing in the opposite end for the reciprocating shaft.

4. A power driven manicure set comprising in combination, an electric hand motor having a casing through which the motor shaft projects, a reciprocating shaft, a plurality of manicure implements adapted to be selectively secured to the shaft, a disk base secured to the end of the motor casing having a bearing for the motor shaft, a bracket carried by the disk base, a combined yoke and reduction gear mechanism carried by the bracket and operatively connecting the motor shaft to the reciprocating shaft, a cap forming a housing for said mechanism open at the rear end to receive the motor casing, screws removably securing said housing to said casing, and a bearing disposed at the front end of the housing for said reciprocating shaft.

In testimony whereof I affix my signature.

ANTHONY SURDOCK [L. S.]