US00D918990S

(12) **United States Design Patent** (10) **Patent No.: US D918,990 S**
**Liao** (45) **Date of Patent: ** May 11, 2021**

(54) **CAMERA STABILIZER RACK BODY**

(71) Applicant: **GUILIN ZHISHEN INFORMATION TECHNOLOGY CO., LTD.**, Guzngxi (CN)

(72) Inventor: **Yilun Liao**, Guangxi (CN)

(73) Assignee: **Guilin Zhishen Information Technology Co., Ltd.**

(**) Term: **15 Years**

(21) Appl. No.: **29/660,741**

(22) Filed: **Aug. 22, 2018**

(30) **Foreign Application Priority Data**

Jan. 6, 2018 (CN) ..... 201830270329.9

(51) **LOC (13) Cl.** ..... **16-05**

(52) **U.S. Cl.**
USPC ..... **D16/242**

(58) **Field of Classification Search**
USPC ..... D16/219, 237–250; D8/354, 355, 363, D8/373, 382–383, 394–396; D14/224, D14/229, 238, 251–253, 447, 451, 457
CPC ..... A45F 2200/0508–0533; A45F 5/00; A45F 5/10; F16M 11/06–10; F16M 11/14; G02B 7/00–002; G03B 17/56; G03B 17/561–568; H04N 5/2253–2254
See application file for complete search history.

(56) **References Cited**

U.S. PATENT DOCUMENTS

| | | | | |
|---|---|---|---|---|
| D559,883 | S * | 1/2008 | Nakamura | D16/218 |
| D732,601 | S * | 6/2015 | Coyle | D16/237 |
| D790,000 | S * | 6/2017 | Wang | D16/200 |
| D816,150 | S * | 4/2018 | Liao | D16/242 |
| D835,175 | S * | 12/2018 | Kim | D16/237 |
| 10,183,762 | B2 * | 1/2019 | Zhao | F16M 13/02 |
| 10,274,127 | B2 * | 4/2019 | Wei | F16M 11/041 |
| D852,865 | S * | 7/2019 | Hu | D16/200 |
| 2008/0210025 | A1 * | 9/2008 | Goossen | F16M 11/041 74/5.34 |
| 2017/0174362 | A1 * | 6/2017 | Zhao | F16M 11/041 |
| 2017/0336700 | A1 * | 11/2017 | Liu | F16M 11/12 |
| 2018/0003340 | A1 * | 1/2018 | Tian | F16M 13/022 |

OTHER PUBLICATIONS

Zhiyun Crane 3 Lab pro gimbal. [online] Published on Dec. 12, 2018. Retrieved Aug. 20, 2019 from URL: https://www.digitalcameraworld.com/news/zhiyun-crane-3-lab-pro-gimbal-takes-the-strain-out-of-handheld-video.*

* cited by examiner

*Primary Examiner* — Vy N Koenig
(74) *Attorney, Agent, or Firm* — Offit Kurman, PA; Zhun Lu

(57) **CLAIM**

The ornamental design for a camera stabilizer rack body, as shown and described.

**DESCRIPTION**

FIG. **1** is a front side perspective view of a rack body of a camera stabilizer rack body according to the claime design;
FIG. **2** is another side perspective view thereof;
FIG. **3** is a front side elevation view thereof;
FIG. **4** is a rear side elevation view thereof;
FIG. **5** is a left side elevation view thereof;
FIG. **6** is a right side elevation view thereof;
FIG. **7** is a top plan view thereof; and,
FIG. **8** is a bottom plan view thereof.
The broken lines shown depict features of the camera stabilizer rack body that form no part of the claimed design.

**1 Claim, 8 Drawing Sheets**

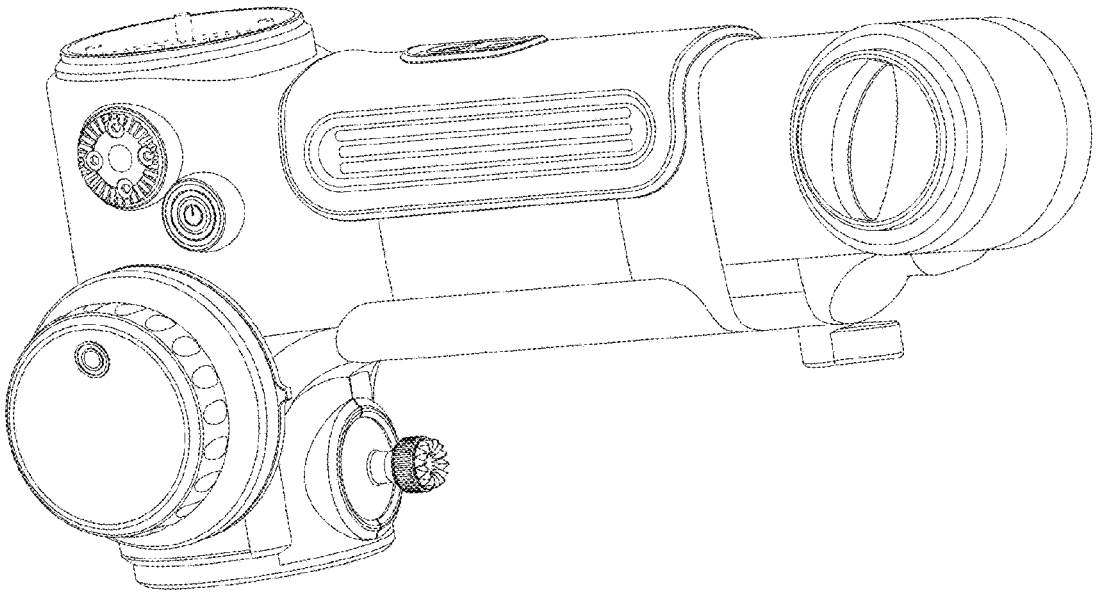

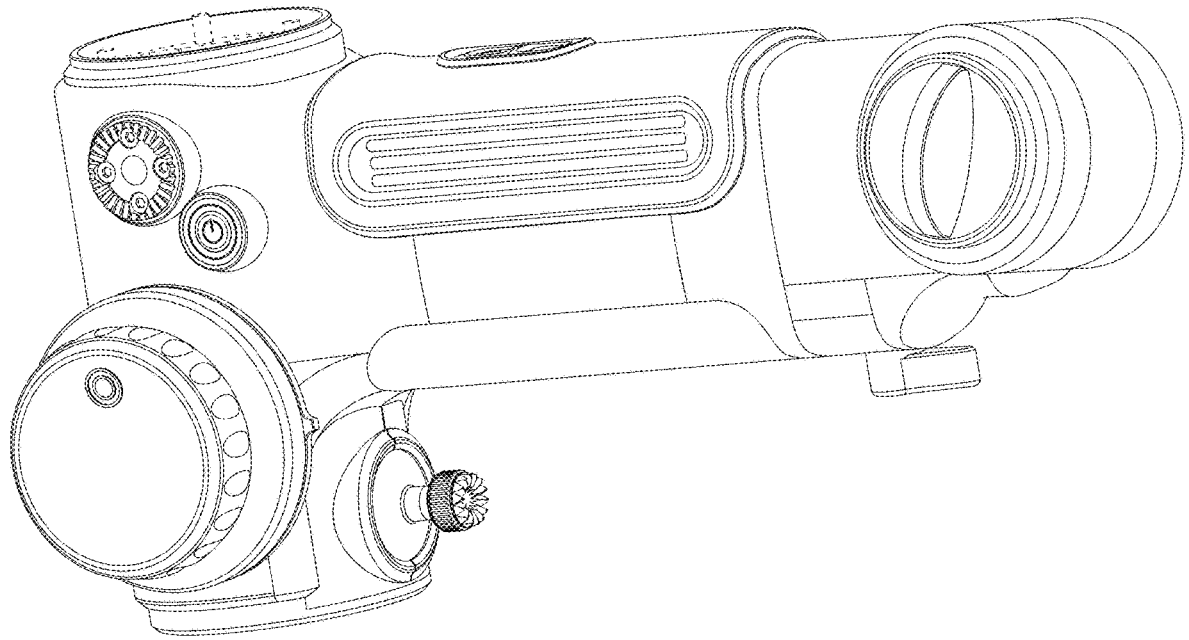

Figure 1

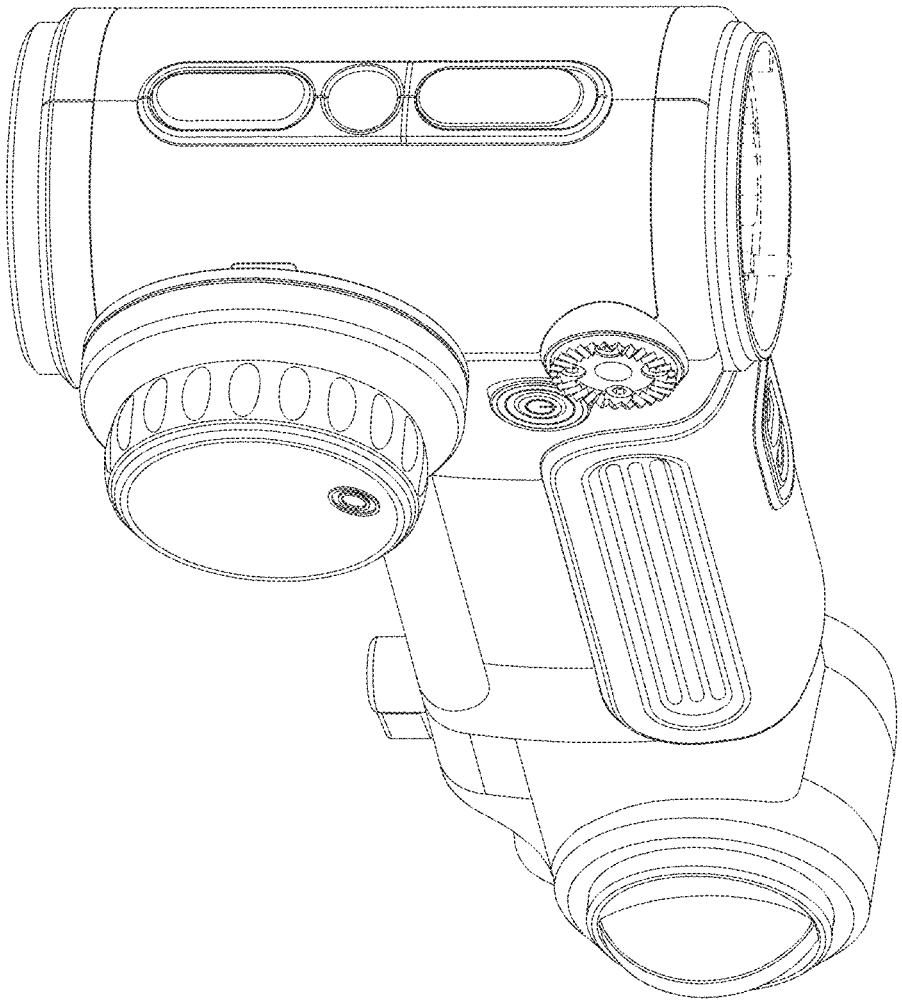

Figure 2

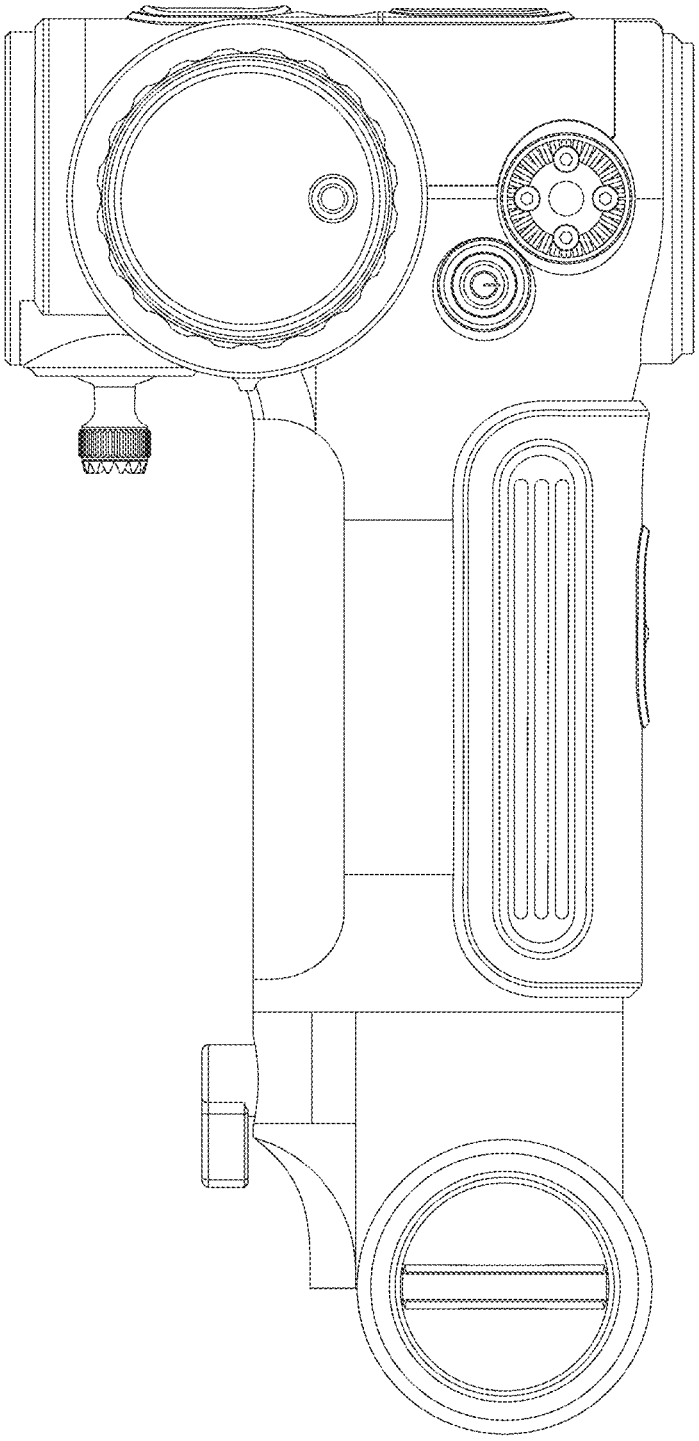

Figure 3

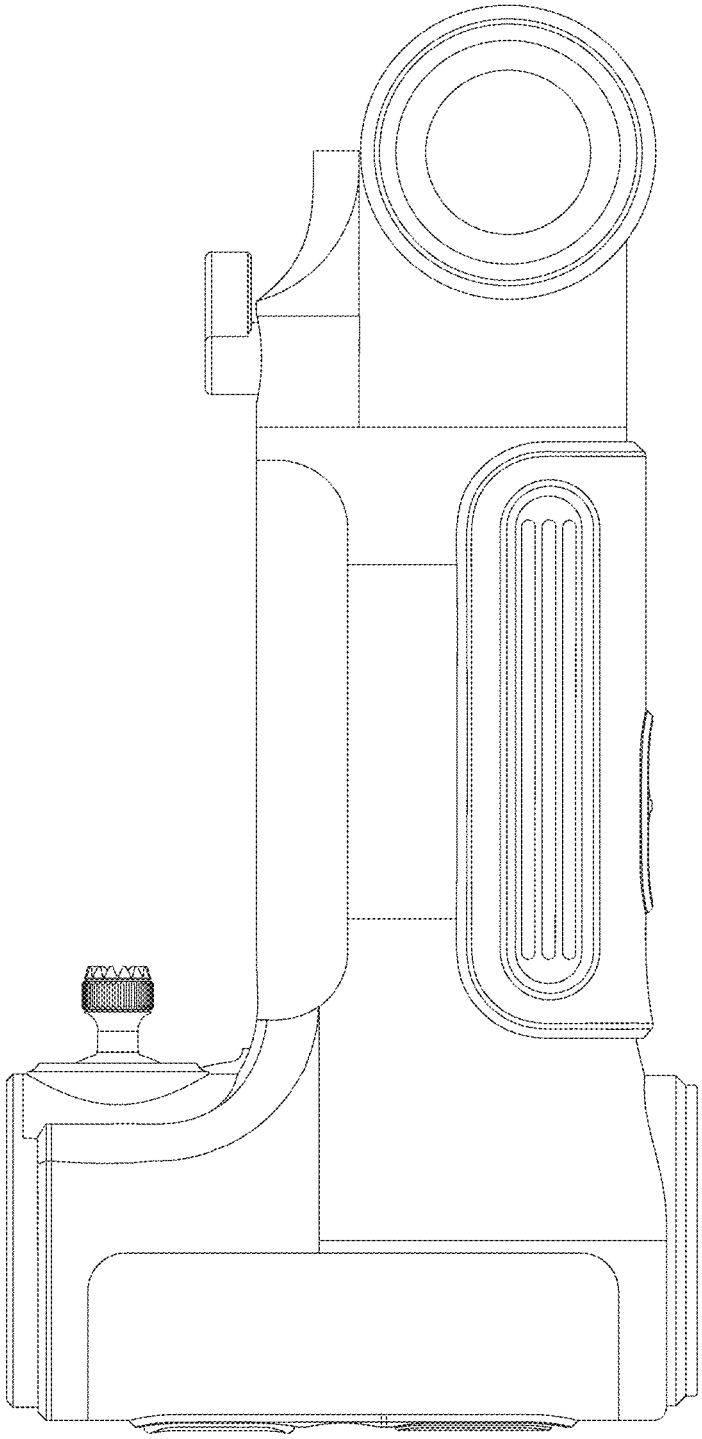

Figure 4

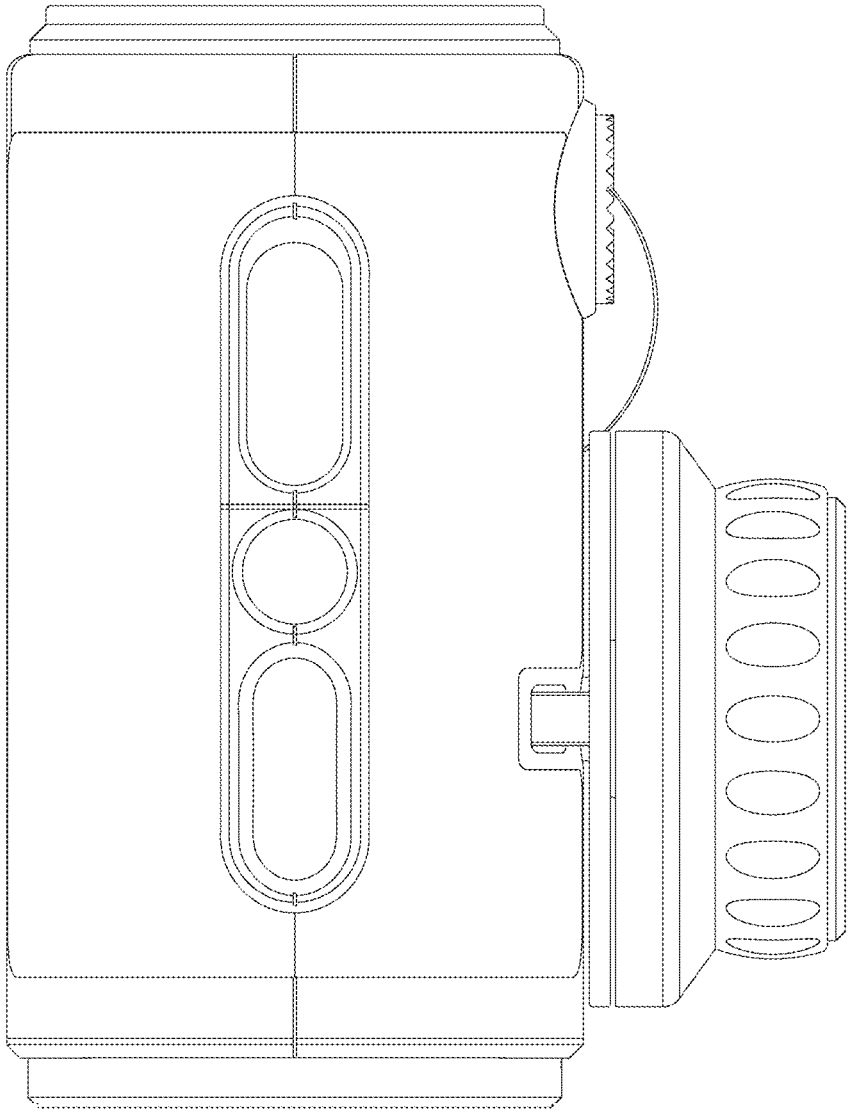

Figure 5

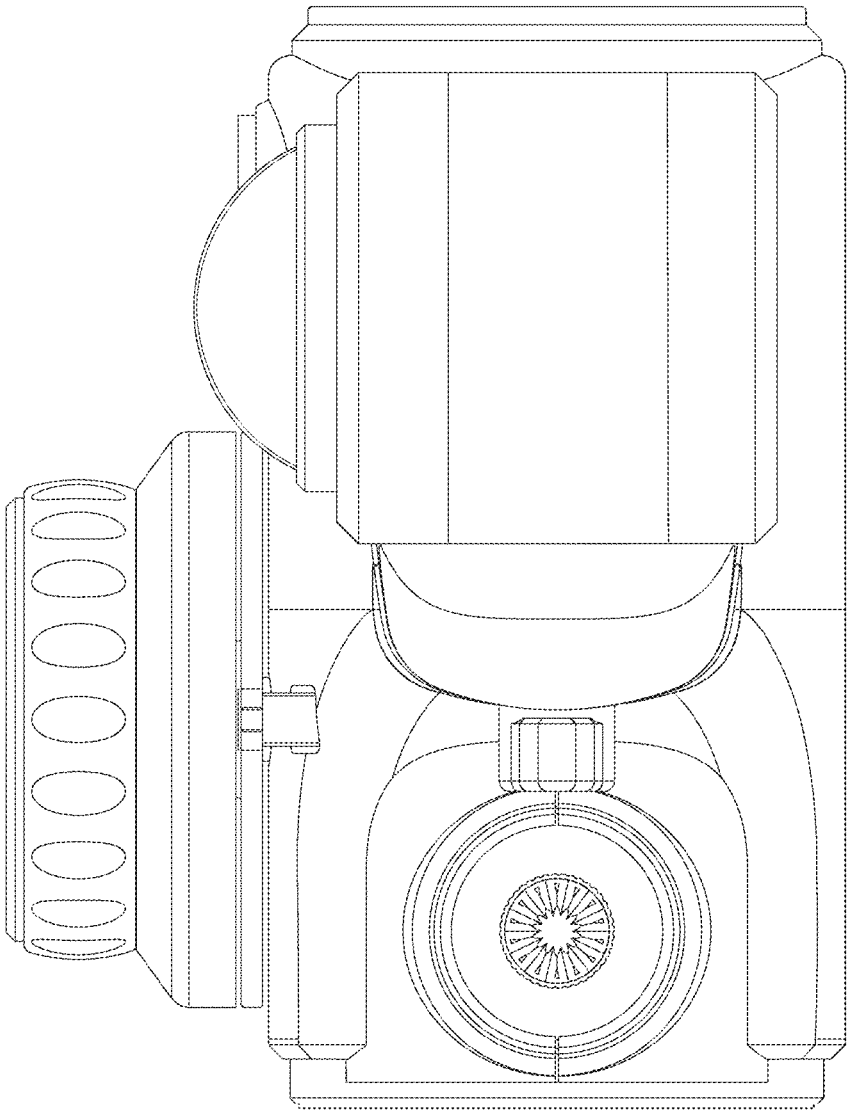

Figure 6

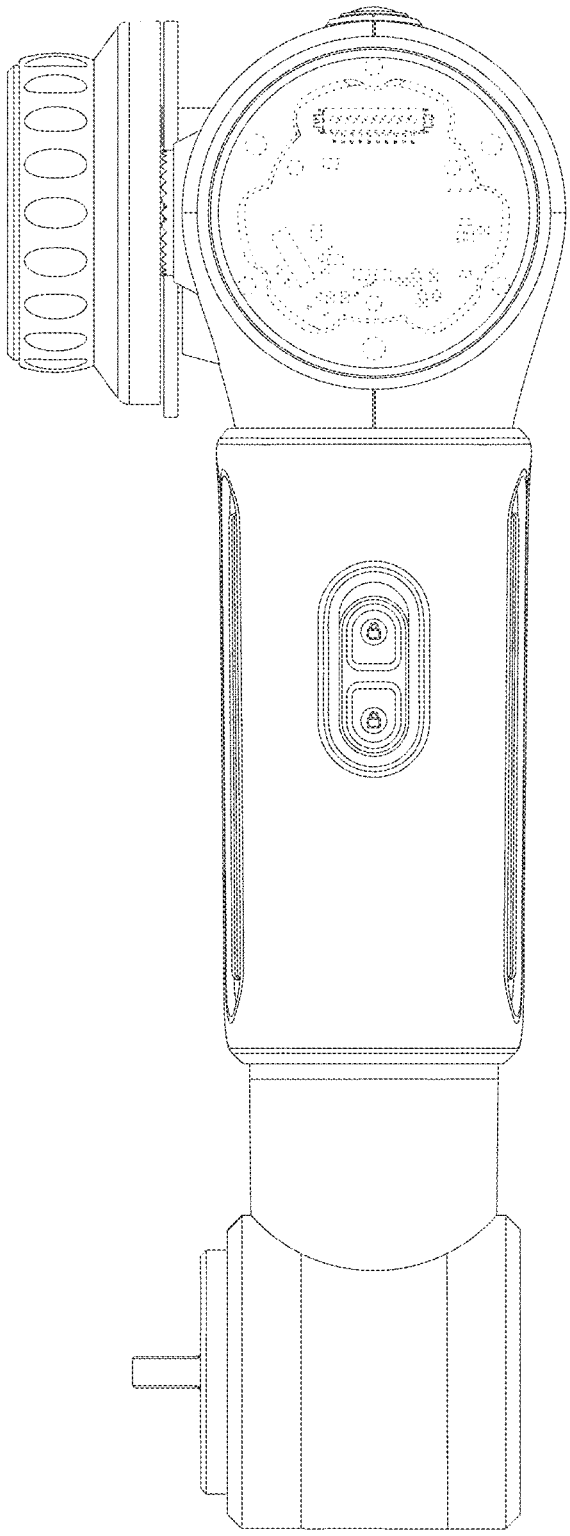

Figure 7

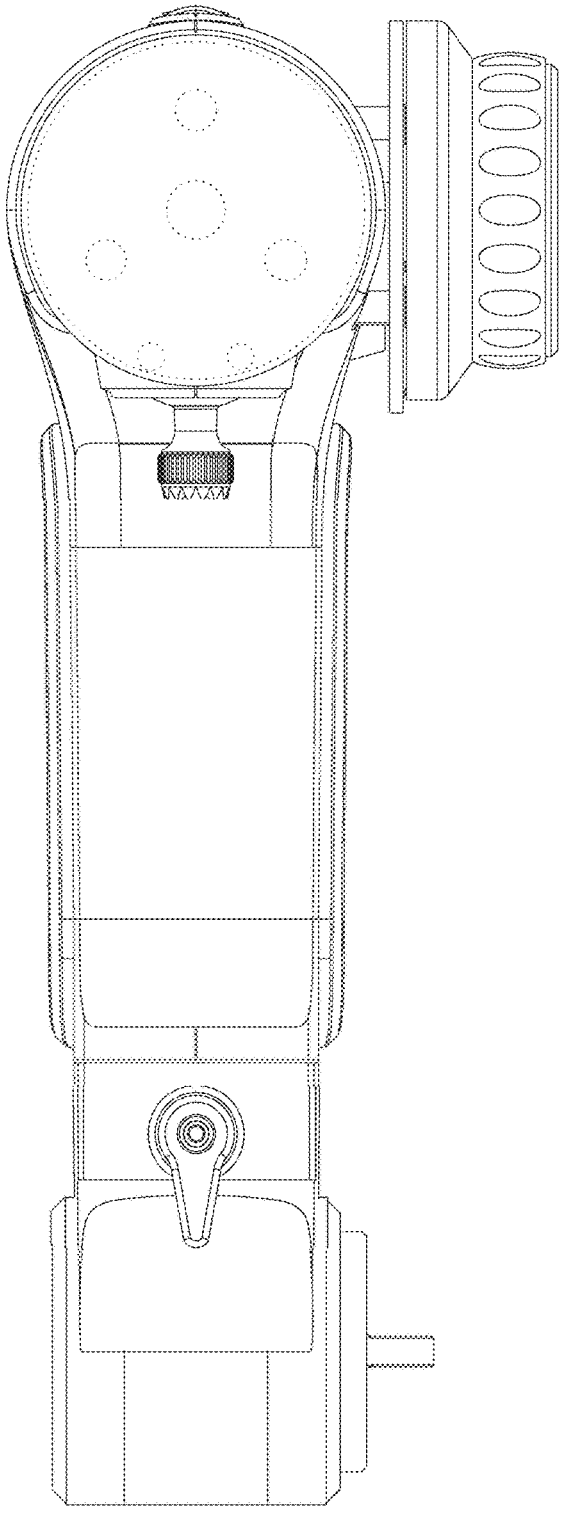

Figure 8