(12) INTERNATIONAL APPLICATION PUBLISHED UNDER THE PATENT COOPERATION TREATY (PCT)

(19) World Intellectual Property Organization
International Bureau

(43) International Publication Date
6 November 2014 (06.11.2014)

WIPO | PCT

(10) International Publication Number
WO 2014/178069 A2

(51) International Patent Classification: Not classified

(21) International Application Number:
PCT/IN2014/000220

(22) International Filing Date:
8 April 2014 (08.04.2014)

(25) Filing Language: English

(26) Publication Language: English

(30) Priority Data:
1369/MUM/2013 12 April 2013 (12.04.2013) IN

(71) Applicant: **TATA CHEMICALS LIMITED** [IN/IN]; Bombay House, 24 Homi Modi Street, Mumbai 400001 (IN).

(72) Inventors: **DAVE, Ujas P.**; Bombay House, 24 Homi Modi Street, Mumbai 400001 (IN). **SHAH, Jignesh**; Bombay House, 24 Homi Modi Street, Mumbai 400001 (IN). **SING, Ramesh**; Bombay House, 24 Homi Modi Street, Mumbai 400001 (IN). **TIWARI, Umesh**; Bombay House, 24 Homi Modi Street, Mumbai 400001 (IN). **PARMAR, Paul**; Bombay House, 24 Homi Modi Street, Mumbai 400001 (IN). **DEY, Amrita**; Bombay House, 24 Homi Modi Street, Mumbai 400001 (IN).

(74) Agent: **OBHAN, Essenese**; Obhan & Associates, 501/7, Lane W-21A, Western Avenue, Sainik Farms, New Delhi 110062 (IN).

(81) Designated States *(unless otherwise indicated, for every kind of national protection available)*: AE, AG, AL, AM, AO, AT, AU, AZ, BA, BB, BG, BH, BN, BR, BW, BY, BZ, CA, CH, CL, CN, CO, CR, CU, CZ, DE, DK, DM, DO, DZ, EC, EE, EG, ES, FI, GB, GD, GE, GH, GM, GT, HN, HR, HU, ID, IL, IN, IR, IS, JP, KE, KG, KN, KP, KR, KZ, LA, LC, LK, LR, LS, LT, LU, LY, MA, MD, ME, MG, MK, MN, MW, MX, MY, MZ, NA, NG, NI, NO, NZ, OM, PA, PE, PG, PH, PL, PT, QA, RO, RS, RU, RW, SA, SC, SD, SE, SG, SK, SL, SM, ST, SV, SY, TH, TJ, TM, TN, TR, TT, TZ, UA, UG, US, UZ, VC, VN, ZA, ZM, ZW.

(84) Designated States *(unless otherwise indicated, for every kind of regional protection available)*: ARIPO (BW, GH, GM, KE, LR, LS, MW, MZ, NA, RW, SD, SL, SZ, TZ, UG, ZM, ZW), Eurasian (AM, AZ, BY, KG, KZ, RU, TJ, TM), European (AL, AT, BE, BG, CH, CY, CZ, DE, DK, EE, ES, FI, FR, GB, GR, HR, HU, IE, IS, IT, LT, LU, LV, MC, MK, MT, NL, NO, PL, PT, RO, RS, SE, SI, SK, SM, TR), OAPI (BF, BJ, CF, CG, CI, CM, GA, GN, GQ, GW, KM, ML, MR, NE, SN, TD, TG).

[Continued on next page]

(54) Title: A WATER PURIFIER

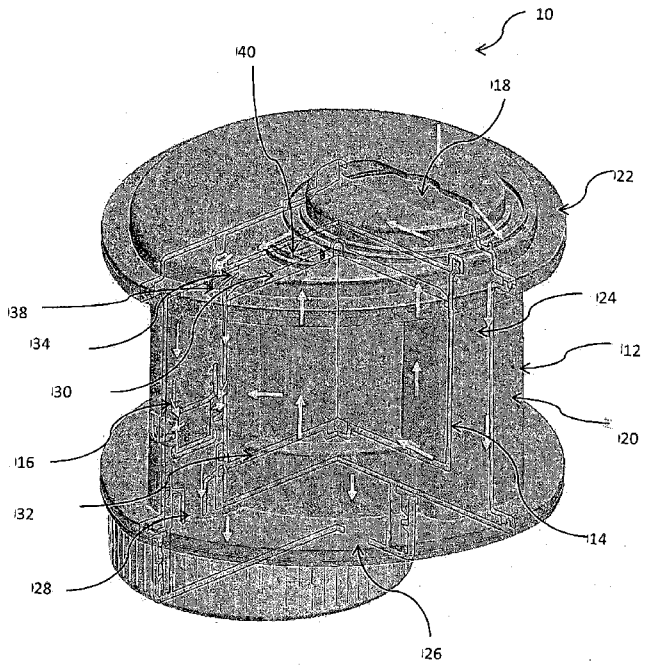

Figure 3

(57) Abstract: A gravity based water purifier is disclosed. The said gravity based water purifier comprises an outer casing defining a purifier inlet for receiving water to be purified and a purifier outlet for outflow of purified water. The outer casing further defines a receptacle for receiving a cartridge holding a purification medium, a cavity for receiving an end of life assembly and a passage for providing a fluid communication under gravity between the purifier inlet and the cartridge. Herein, the cartridge defines a top surface and a bottom surface and includes a cartridge inlet positioned proximate the bottom surface for receiving water to be purified from the purifier inlet through the passage and a cartridge outlet positioned proximate the top surface for delivering the purified water therefrom, such that the water to be purified flows in an upward direction through the purification medium in the cartridge. The end of life assembly comprises an assembly inlet and an assembly outlet, the assembly inlet positioned proximate the cartridge outlet and configured to receive the purified water therefrom, the assembly outlet positioned proximate the purifier outlet, such that the purified water flows downward unidirectionally under gravity through the end of life assembly before exiting the water purifier through the purifier outlet.

WO 2014/178069 A2

Published:

— *without international search report and to be republished upon receipt of that report (Rule 48.2(g))*

A WATER PURIFIER

The disclosure relates to a gravity based water purifier. In particular the disclosure relates to a gravity based water purifier having an integrated end of life assembly.

BACKGROUND

Clean potable water is a basic human requirement. However, a large portion of the world's population, especially those living in developing counties do not have access to clean potable water.

Many water purification devices like in-line (electricity operated) devices, terminal end devices including counter top and faucet mounted filtration and self-contained batch system including gravity fed systems have been introduced into the market. However, many communities of the developing countries do not have access to piped water or reliable electricity connection to make use of inline or electrically driven purification units. They also do not have access to central water purification units installed near the water bodies from where they source their water. Moreover, the people in these communities cannot afford the point-of-use water purifies currently available in the market. The maintenance requirements and the high cost of consumables of these purifiers pose further hurdles for the adoption of these devices.

Absence of a reliable indication on the end of the useful life of a purifier is also a limitation with prior art techniques generally limited to add on components complicating the working of a water purifier as well as being susceptible to tampering and circumventing.

Indian patent application no. 2807/MUM/2009 discloses a gravity based water purifier having an integrated end of life indicator. As illustrated in figure 1, the gravity based water purifier disclosed therein comprises an outer casing defining an inlet for receiving water to be purified, a recess to receive a cartridge holding a purification medium, a cavity to receive an end of life assembly, a passage connecting the cavity to the recess, and a purifier outlet. The purifier includes a cartridge holding a purification medium defining a top and bottom surface and including a cartridge inlet for receiving water to be purified positioned proximate the bottom surface and a cartridge outlet for purified water also positioned proximate the bottom surface. The cartridge further includes an outlet passage for conveying water exiting the purification medium to the cartridge outlet. The cartridge is configured to be received in the recess such that a recess chamber is defined there between, an accumulation chamber is formed between the cartridge and the outer casing and the cartridge outlet is in fluid communication with the purifier outlet. An end of life chamber is placed in the cavity and includes an inlet in fluid communication with the accumulation chamber and an outlet in fluid communication with the recess chamber via the passage. The end of life chamber further contains at least one water soluble tablet and a plunger with a plug configured to close the inlet of the end of life chamber when the water soluble tablet is dissolved after a predetermined amount of water passes through the water purifier. As shown in figure 2, water entering the water purifier through the inlet in the outer casing travels through the end of life chamber to the cartridge and passes through the cartridge in upward direction before exiting from the water purifier. In this water purifier, water enters the end of life chamber before passing through the cartridge.

In the water purifier described above, the water passed through end of life chamber before passing through the cartridge and followed a tortuous path when passing through the purifier, pressure drop was observed. This tortuous path resulted in reducing the rate of flow with/ without blockage of flow of water as the filtration progresses.

Thus there is a need for an improved water purifier which exhibits improved rate of filtration at a comparatively constant flow rate without any blockage.

BRIEF DESCRIPTION OF DRAWINGS

Figure 1 is a perspective view of a water purifier of prior art;

Figure 2 is a schematic representation of flow of water in the water purifier illustrated in figure 1;

Figure 3 is a schematic representation of the gravity based water purifier in accordance of the preferred embodiment of the present invention;

Figure 4 describes the flow of water at the inlet in the gravity based water purifier illustrated in Figure 3;

Figure 5 describes the flow of water at the outlet in the gravity based water purifier illustrated in Figure 3;

Figure 6 illustrates the back flush system provided in the gravity based water purifier illustrated in Figure 3.

SUMMARY

A gravity based water purifier is disclosed. The said gravity based water purifier comprises an outer casing defining a purifier inlet for receiving water to be purified and a purifier outlet for outflow of purified water. The outer casing further defines a receptacle

for receiving a cartridge holding a purification medium, a cavity for receiving an end of life assembly and a passage for providing a fluid communication under gravity between the purifier inlet and the cartridge. Herein, the cartridge defines a top surface and a bottom surface and includes a cartridge inlet positioned proximate the bottom surface for receiving water to be purified from the purifier inlet through the passage and a cartridge outlet positioned proximate the top surface for delivering the purified water therefrom, such that the water to be purified flows in an upward direction through the purification medium in the cartridge. The end of life assembly comprises an assembly inlet and an assembly outlet, the assembly inlet positioned proximate the cartridge outlet and configured to receive the purified water therefrom, the assembly outlet positioned proximate the purifier outlet, such that the purified water flows downward unidirectionally under gravity through the end of life assembly before exiting the water purifier through the purifier outlet.

DETAILED DESCRIPTION

For the purpose of promoting an understanding of the principles of the invention, reference will now be made to the embodiment illustrated in the drawings and specific language will be used to describe the same. It will nevertheless be understood that no limitation of the scope of the invention is thereby intended, such alterations and further modifications in the illustrated device, and such further applications of the principles of the invention as illustrated therein being contemplated as would normally occur to one skilled in the art to which the invention relates.

It will be understood by those skilled in the art that the foregoing general description and the following detailed description are exemplary and explanatory of the invention and are not intended to be restrictive thereof.

A gravity based water purifier is dislcosed. More particularly, a gravity based purifier comprising an end of life assembly is disclosed. The gravity based water purifier dislcosed herein is described in detail below with reference to the accompanying figures.

Figure 3 illustrates the gravity based water purifier (10) of the present invention, hereinafter referred to as 'purifier (10)' in accordance with an embodiment. Referring to figures 3, 4 and 5, the purifier (10) includes an outer casing (12) enveloping a cartridge (14) and an end of life assembly (16). The end of life assembly (16) is placed after the cartridge (14) in the flow of water through the purifier (10). The outer casing (12) includes a purifier inlet (18) configured to receive water to be purified from a source and a purifier outlet (26) for outflow of purified water. The purifier inlet is preferably placed proximate a top surface of the outer casing. The outer casing (12) further defines a receptacle for receiving the cartridge (14) holding a purification medium and a cavity for receiving the end of life assembly (16).

The outer casing (12) in accordance with an aspect, comprises of a main body (20) and a lid (22). The lid (22) is configured for attachment with the main body (20) such that in the assembled condition forms a closed container. The lid (22) may be attached to the main body (20) by any means including but not limited to threads, push fit, snap fit or ultrasonic welding. In accordance with a preferred embodiment, the lid (22) has the purifier inlet (18) defined therein for receiving water to be purified. In accordance with

another preferred embodiment, the main body (20) of the outer casing (12) has a bottom surface having the purifier outlet (26) defined therein for outflow of purified water.

Referring to figures 3, 4 and 5, the outer casing (12) further defines a passage (24) between the catridge (14) and the outer casing (12) configured to receive water from the purifier inlet (18) and convey the same to a cartridge inlet (42), under gravity.

In accordance with an aspect, the cartridge (14) holds a purification medium (not shown) and defines a top surface (30) and a bottom surface (32). The cartridge (14) further includes a cartridge inlet (42) positioned proximate the bottom surface (32) and the cartridge outlet (44) positioned proximate the top surface (30). In accordance with an aspect, the cartridge inlet (42) includes a substantial portion of the bottom surface (32) of the cartridge (14). Water to be purified enters the cartridge (14) through the cartridge inlet (42), passes through the purification medium in upward direction and exits the cartridge (14) through the cartridge outlet (44) proximate the top surface (30).

In accordance with an aspect, the purification medium may be any medium that can effectively remove contaminants from water. In accordance with a specific embodiment, the purification medium includes one or both of rice husk ash and quartz along with a biocide. In accordance with a related embodiment, the purification medium may be in the form of powder or granules. In accordance with a specific embodiment, the purification medium is in granular form. In accordance with a specific embodiment, the biocide is selected from a group comprising of silver nanoparticles, copper nanoparticles and combination thereof. In accordance with yet another embodiment, the biocide may be coated on the rice husk ash and/or the quartz or embedded in the matrix of the rice husk

ash and/or the quartz. By way of a specific example, rice husk ash in granular form coated with silver nanoparticles is used as the purification medium.Any known process may be used to prepare the said purification medium. In accordance with an embodiment, the top surface (30) is made of a mesh having large openings. Presence of large openings in the mesh enables better flow of water there through.

In accordance with an embodiment, an accumulation chamber (40) is provided between the top surface (30) of the cartridge (14) and the outer casing (12) to collect the water exiting the cartridge outlet (44).

In accordance with an aspect, the end of life assembly (16) comprises an assembly inlet (38) positioned proximate the cartridge outlet (44) and configured to receive the purified water therefrom. The end of life assembly (16) further comprises an assembly outlet (28) positioned proximate the purifier outlet (26). The assembly outlet (28) is connected to the purifier outlet (26) such that water exiting the assembly outlet (28) passes through the purifier outlet (26). In accordance with an aspect, the purified water flows downward unidirectionally under gravity through the end of life assembly (16) before exiting the water purifier through the cartridge outlet (28). In accordance with an embodiment, the end of life assembly (16) used in the purifier (10) may be any end of life indicating device which allows unidirectional downward flow of water under gravity. Preferably, the end of life assembly (16) comprises an auto shut off device which is actuated by a water soluble tablet upon complete or partial dissolution thereof, to stop the flow of water once a predetermined quantity of water has passed there-through.

In accordance with an aspect, a nozzle (34) is provided for conveying water exiting the cartridge (14) to the end of life assembly (16). The nozzle (34) is disposed between the the cartridge outlet (44) and the assembly inlet (38). In accordance with an aspect, the nozzle (34) is located at the highest point of the connection between the cartridge (14) and the end of life assembly (16) to reduce resistance to flow of water.

In accordance with an aspect, the nozzle (34) is a venturi like structure, the cross sectional area of which increases from entry point to the exit point of water. Due to venturi effect, the velocity of water increases after passing through the nozzle (34) which helps to remove any particle stuck in the nozzle (34). Thus any probability of blockages is reduced. The nozzle (34) also helps in removing any air bubble.

In accordance with an embodiment, a back flush system configured for connection to the purifier outlet (26) is provided. The back flush system is adapted to force air or water through the purifier (10) in a reverse manner to remove any blockages. In figure 6, the back flush system comprising a bellow (36) along with a pipe (46), capable of being connected to the purifier outlet (26) is provided.

In accordance with an embodiment, the outer casing (12) and the end of life assembly (16) are made of transparent material such that it enables visual inspection thereof.

In accordance with an embodiment, a sealing means may be provided between any two connecting parts of the water purifier to ensure that the there is no leakage of water from the water purifier. The sealing means may be selected from one or both of O-rings

and gaskets. By way of a specific example, the lid (22) is provided with the O-rings. In accordance with a related embodiment, the O-rings and the gaskets are made up of plastic or rubber. By way of a specific example, the O-rings and gaskets are made up of silicon rubber.

With reference to figures 4 and 5, the flow of water through the purifier (10) is illustrated. The water enters the purifier (10) through the purifier inlet (18) and travels through the passage (24) to the cartridge inlet (42). Water then enters the cartridge (14) and travels in upward direction through the purification medium followed by exit through the cartridge outlet (44). Water exiting the cartridge outlet (44) gets accumulated in the accumulation chamber (40) above the top surface (30) and passes through the nozzle (34) to the assembly inlet (38). Water entering the end of life assembly (16) then passes downward unidirectionally under gravity and exits the end of life assembly (16) through the assembly outlet (28). Purifier water is conveyed from the assembly outlet (28) to the purifier outlet (26).

SPECIFIC EMBODIMENTS ARE DESCRIBED BELOW

A gravity based water purifier comprising an outer casing defining a purifier inlet for receiving water to be purified and a purifier outlet for outflow of purified water; the outer casing further defining a receptacle for receiving a cartridge holding a purification medium, a cavity/ compartment for receiving an end of life assembly and a passage for providing a fluid communication under gravity between the purifier inlet and the cartridge; the cartridge defining a top surface and a bottom surface and including a cartridge inlet positioned proximate the bottom surface for receiving water to be purified from the purifier inlet through the passage and a cartridge outlet positioned proximate the top

surface for delivering the purified water therefrom, such that the water to be purified flows in an upward direction through the purification medium in the cartridge; the end of life assembly comprising an assembly inlet and an assembly outlet, the assembly inlet positioned proximate the cartridge outlet and configured to receive the purified water therefrom, the assembly outlet positioned proximate the purifier outlet, such that the purified water flows downward unidirectionally under gravity through the end of life assembly before exiting the water purifier through the purifier outlet.

Such a gravity based water purifier wherein a nozzle is disposed between the cartridge and the end of life assembly to allow the passage of water there-through from the cartridge outlet to the assembly inlet.

Such a gravity based water purifier wherein the nozzle is located at the highest point of connection between the cartridge and the end of life assembly.

Such a gravity based water purifier wherein the nozzle has a cross sectional area increasing from entry point towards exit point to cause an increase in the velocity of water passing there-through.

Such a gravity based water purifier wherein an accumulation chamber is formed between the top surface of the cartridge and the outer casing to collect the water exiting the cartridge outlet.

Such a gravity based water purifier wherein the purification medium comprises of a composition comprising one or both of rice husk ash and quartz along with a biocide.

Such a gravity based water purifier wherein the biocide comprises of nanoparticles of silver or copper.

Such a gravity based water purifier wherein the top surface of the cartridge is made of a mesh having large openings.

Such a gravity based water purifier wherein the outer casing and the end of life assembly are made of transparent material such that it enables visual inspection thereof.

Such a gravity based water purifier wherein the end of life assembly comprises an auto shut off device which is actuated by a water soluble tablet upon complete or partial dissolution thereof, to stop the flow of water once a predetermined quantity of water has passed there-through.

Such a gravity based water purifier wherein the assembly outlet is connected to the purifier outlet such that water exiting the assembly passes through the purifier outlet.

Such a gravity based water purifier further comprising a back flush system configured for connection to the purifier outlet and adapted to force air or water through the purifier in a reverse manner.

INDUSTRIAL APPLICABILITY

The purifier (10) of the present invention can be attached to commonly available water storage vessels. The purifier (10) is easy and inexpensive to manufacture. The

purifier (10) does not require any external energy for operation as the flow of water through the purifier (10) is under the force of gravity. The purification medium as described above is a simple medium that is inexpensive, easy to use and effective in removing bacterial contamination from potable water. The integrated end of life assembly and the defined flow path ensures a smooth and uniform flow of water through the purifier (10) without any blockage.

WE CLAIM:

1. A gravity based water purifier comprising:

an outer casing defining a purifier inlet for receiving water to be purified and a purifier outlet for outflow of purified water; the outer casing further defining a receptacle for receiving a cartridge holding a purification medium, a cavity/ compartment for receiving an end of life assembly and a passage for providing a fluid communication under gravity between the purifier inlet and the cartridge;

the cartridge defining a top surface and a bottom surface and including a cartridge inlet positioned proximate the bottom surface for receiving water to be purified from the purifier inlet through the passage and a cartridge outlet positioned proximate the top surface for delivering the purified water therefrom, such that the water to be purified flows in an upward direction through the purification medium in the cartridge;

the end of life assembly comprising an assembly inlet and an assembly outlet, the assembly inlet positioned proximate the cartridge outlet and configured to receive the purified water therefrom, the assembly outlet positioned proximate the purifier outlet, such that the purified water flows downward unidirectionally under gravity through the end of life assembly before exiting the water purifier through the purifier outlet.

2. A gravity based water purifier as claimed in claim 1 wherein a nozzle is disposed between the cartridge and the end of life assembly to allow the passage of water there-through from the cartridge outlet to the assembly inlet.

3. A gravity based water purifier as claimed in claim 2 wherein the nozzle is located at the highest point of connection between the cartridge and the end of life assembly.

4. A gravity based water purifier as claimed in claim 2 wherein the nozzle has a cross sectional area increasing from entry point towards exit point to cause an increase in the velocity of water passing there-through.

5. A gravity based water purifier as claimed in claim 1 or 2, wherein an accumulation chamber is formed between the top surface of the cartridge and the outer casing to collect the water exiting the cartridge outlet.

6. A gravity based water purifier as claimed in any preceding claim wherein the purification medium comprises of a composition comprising one or both of rice husk ash and quartz along with a biocide.

7. A gravity based water purifier as claimed in claim 6, wherein the biocide comprises of nanoparticles of silver or copper.

8. A gravity based water purifier as claimed in any preceding claim, wherein the top surface of the cartridge is made of a mesh having large openings.

9. A gravity based water purifier as claimed in any preceding claim, wherein the outer casing and the end of life assembly are made of transparent material such that it enables visual inspection thereof.

10. A gravity based water purifier as claimed in any preceding claim, wherein the end of life assembly comprises an auto shut off device which is actuated by a water soluble tablet upon complete or partial dissolution thereof, to stop the flow of water once a predetermined quantity of water has passed there-through.

11. A gravity based water purifier as claimed in any preceding claim, wherein the assembly outlet is connected to the purifier outlet such that water exiting the assembly passes through the purifier outlet.

12. A gravity based water purifier as claimed in any preceding claim, further comprising a back flush system configured for connection to the purifier outlet and adapted to force air or water through the purifier in a reverse manner.

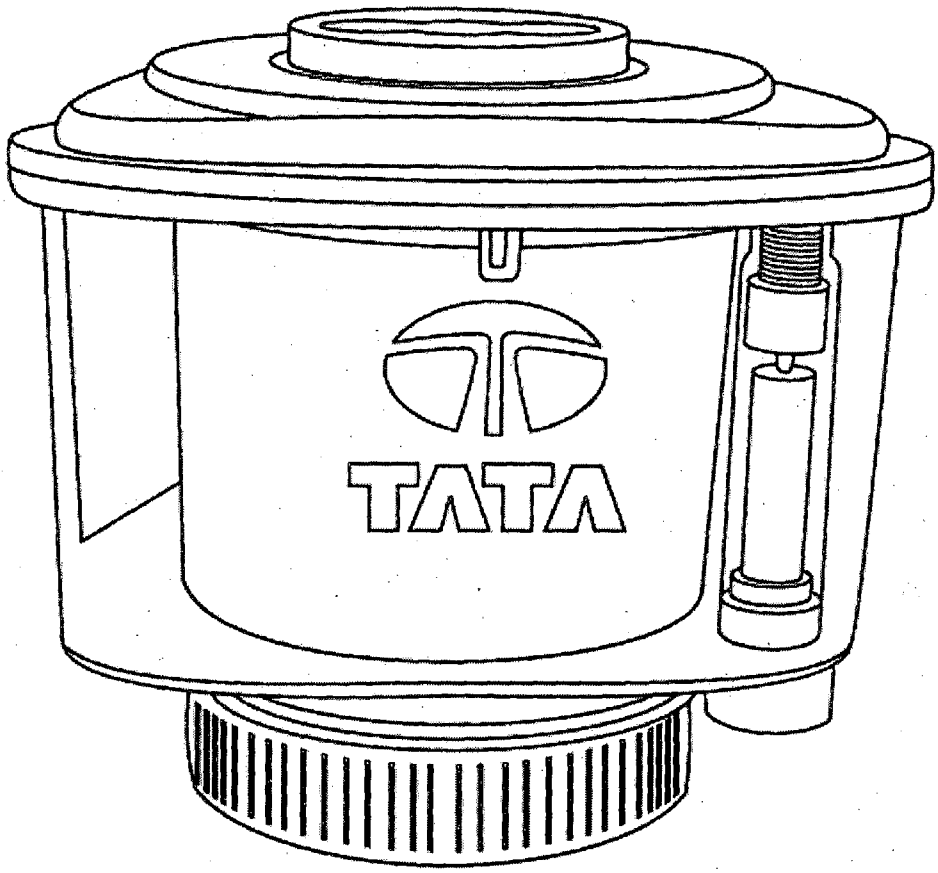

Figure 1

(PRIOR ART)

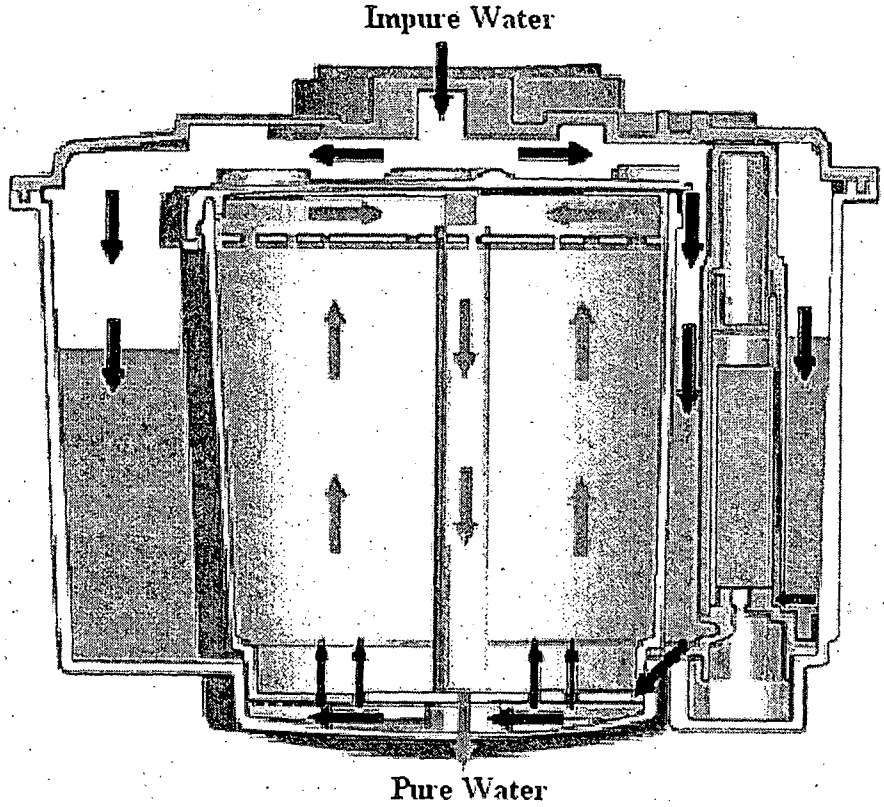

Figure 2

(PRIOR ART)

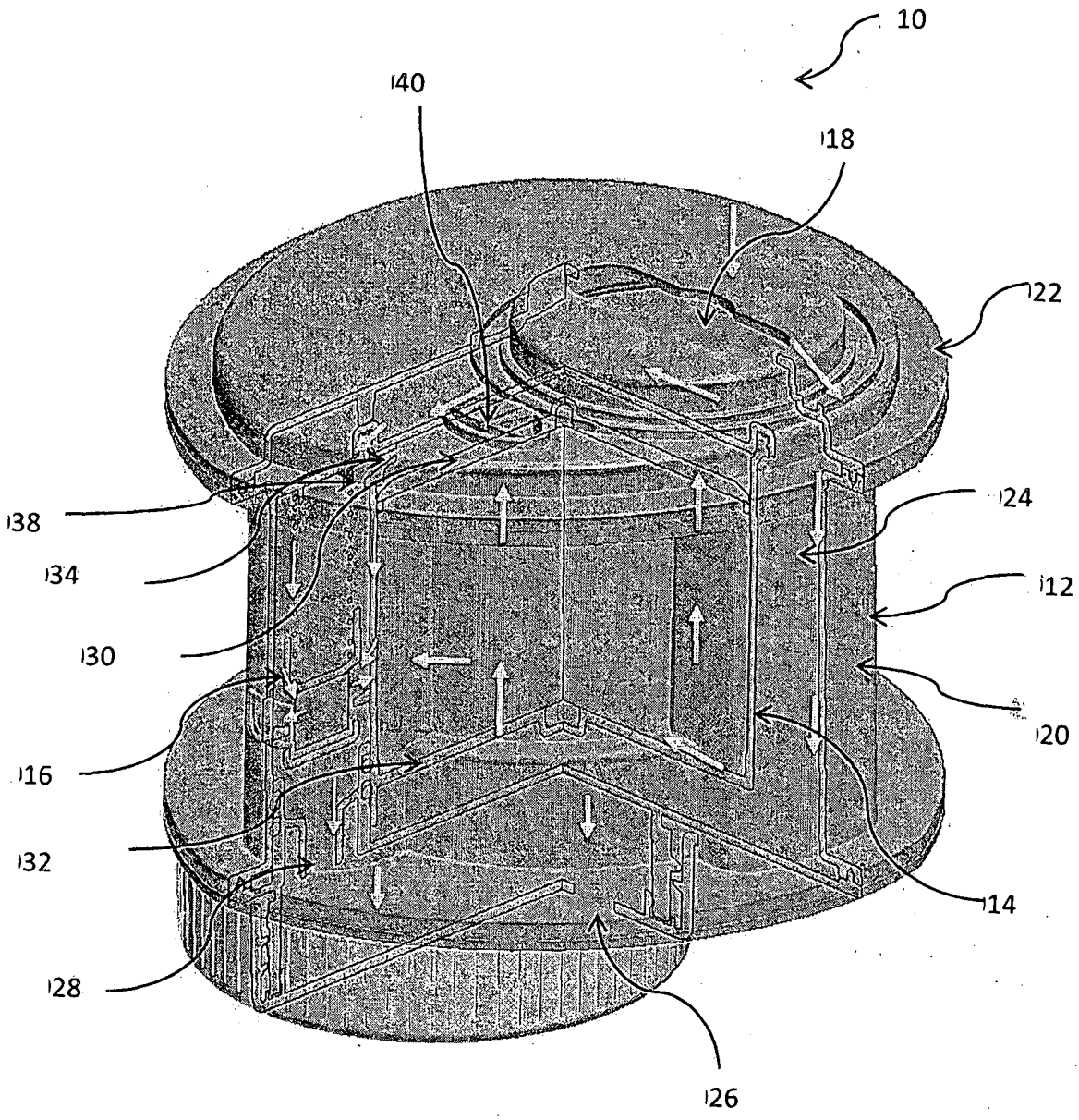

Figure 3

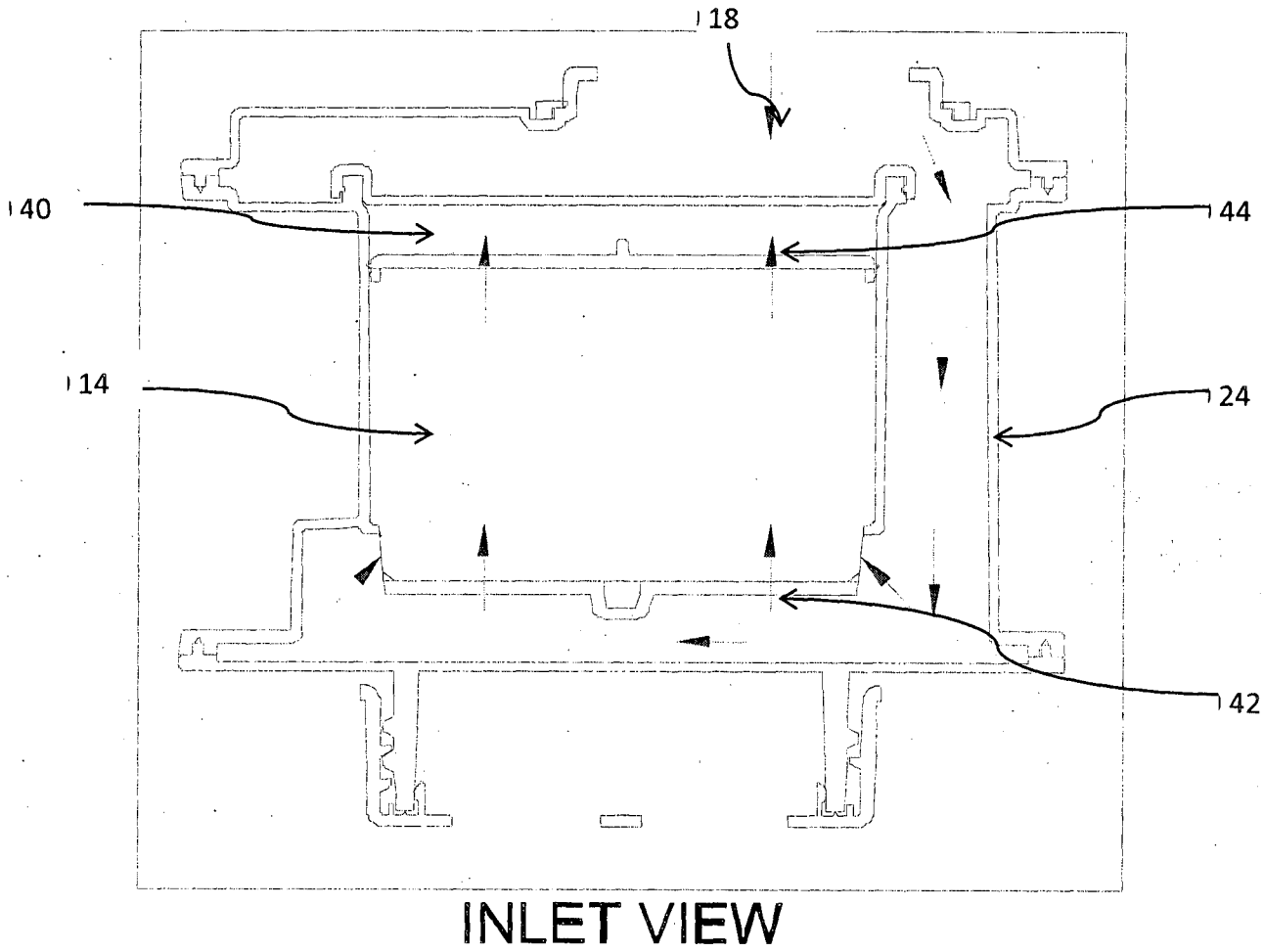

Figure 4

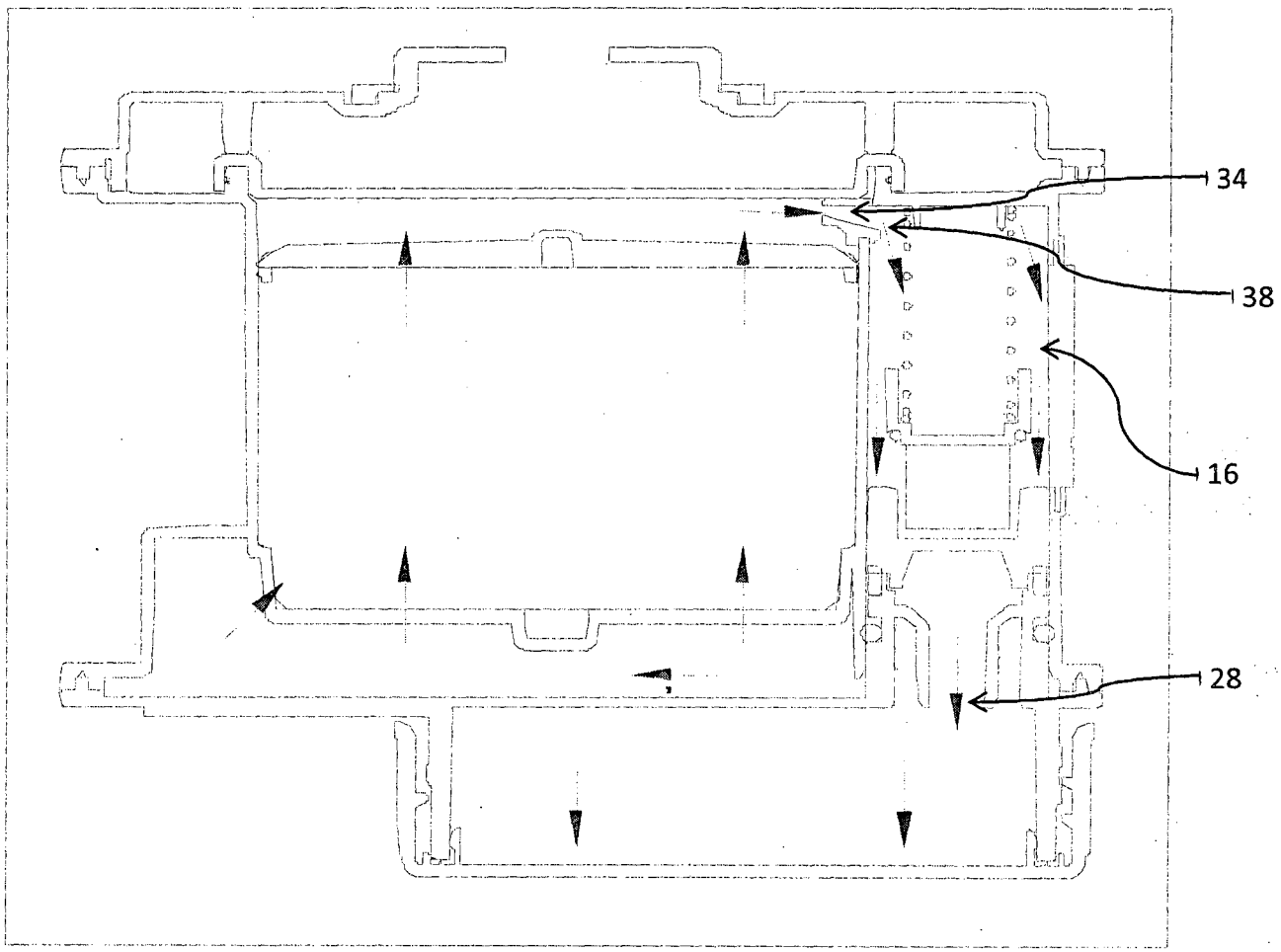

Figure 5

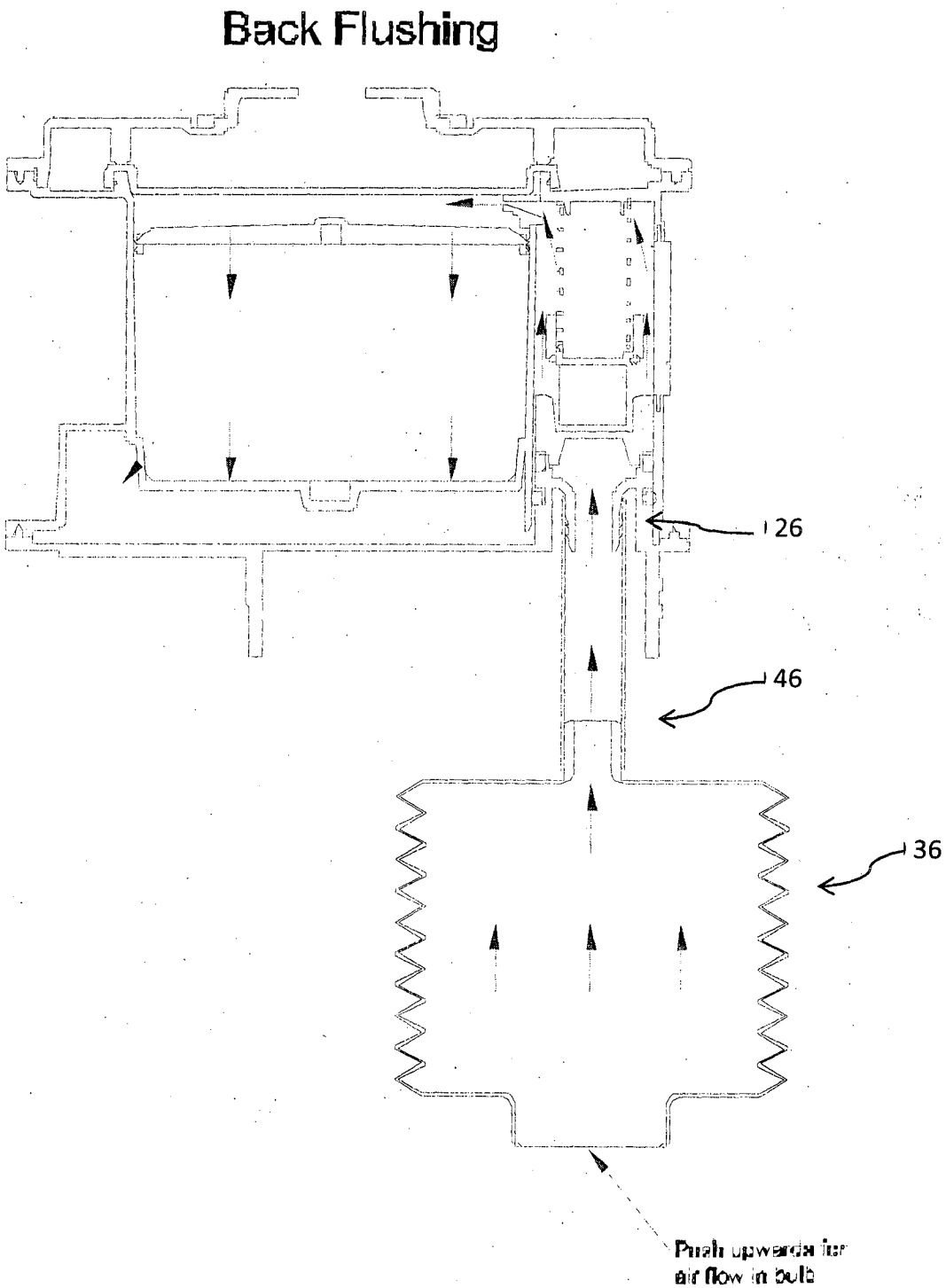

Figure 6