Sept. 26, 1944. J. W. MONROE 2,359,048

HEATING SYSTEM

Filed April 16, 1942

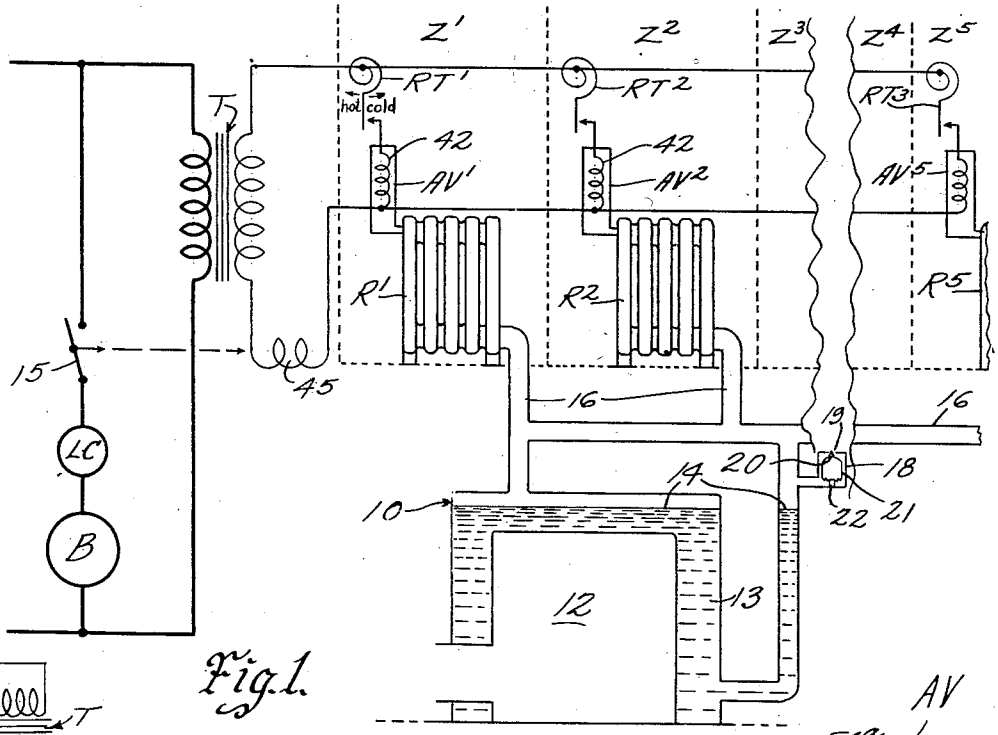


Fig. 1.

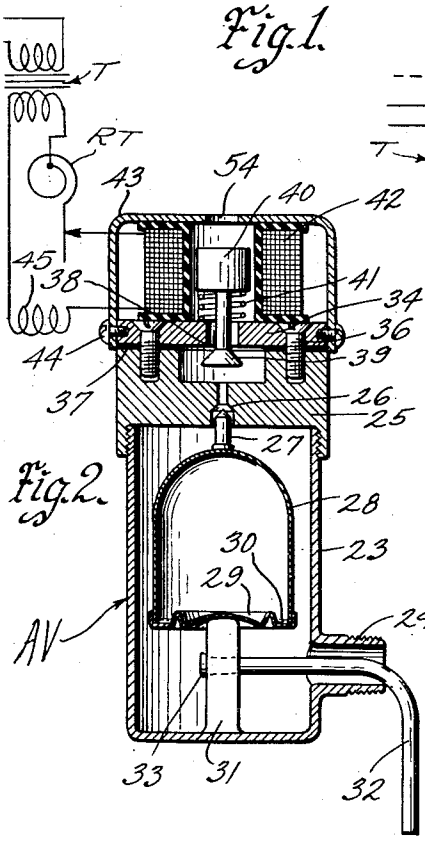


Fig. 2.

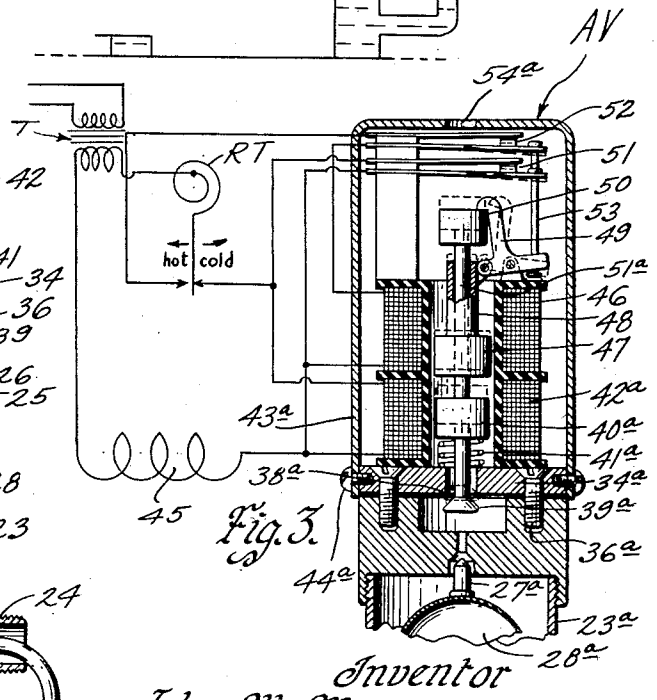


Fig. 3.

Inventor
John W. Monroe
by Bair & Freeman
Attorneys

Patented Sept. 26, 1944

2,359,048

# UNITED STATES PATENT OFFICE

2,359,048

## HEATING SYSTEM

John W. Monroe, Ottumwa, Iowa

Application April 16, 1942, Serial No. 439,207

13 Claims. (Cl. 237—10)

My invention contemplates a heating system of single-pipe character having heat radiators rendered inoperable by air blocking means.

One object of the invention is to provide a heating system of this character wherein radiators in different zones may be individually controlled by air blocking them when heat is not desired, and opening an air vent to cease the air blocking operation when heat is desired, the radiators being controlled by room thermostats within the respective zones, any one of which is also operable to cause the steam generator to operate.

Another object is to provide a heating system which uses an electrically operable air vent at each radiator, the vent normally air blocking the radiator against the entrance of steam thereto, and being operable to permit such entrance of steam when the air vent is energized by a room thermostat or the like.

Still another object is to provide an electrically operable air vent of simple and inexpensive construction particularly designed for use in a system of the character herein disclosed.

A further object is to provide a modified form of electrically operated air vent utilizing only momentary energization thereof for either opening or closing the air vent.

With these and other objects in view, my invention consists in the construction, arrangement and combination of the various parts of my device whereby the objects contemplated are attained, as hereinafter more fully set forth, pointed out in my claims, and illustrated in the accompanying drawing, wherein:

Figure 1 is a diagrammatic view showing a heating system embodying my invention, and showing the electric circuit therefor;

Figure 2 is a sectional view through an electrically operated air vent forming part of the system; and

Figure 3 is a similar view showing a modified form of air vent.

On the accompanying drawing I have used the reference numeral 10 to indicate a boiler, the combustion chamber thereof being indicated at 12. The boiler 10 may be of usual construction, and, in the present instance, may be a steam generator. Water 13 is indicated therein up to a level 14.

The boiler 10 may be heated by any suitable means, such as an oil burner, a gas burner or a stoker. The burner is shown electro-diagrammatically at B, and in the case of an oil burner would include a motor for operating a blower and an oil pump, to furnish air and oil for combustion. In the case of a gas fired furnace, the burner B would be an electrically opened gas valve. In the case of a stoker the burner B would be a stoker motor for feeding coal to the combustion chamber 12 and also to furnish air from a blower to support combustion. The type of burner is immaterial as far as my system is concerned, and the element B of Figure 1 therefore indicates a burner in general.

The burner B is shown in a high voltage circuit (110 or 220 volts) under control of a burner switch 15, and a limit control LC. The limit control LC may be a steam pressure operated control for cutting off the circuit through the burner B whenever the boiler attains a dangerously high temperature or pressure. Since the burner B and the limit control LC are conventional, they have been shown merely diagrammatically, without indicating their usual position with respect to the boiler 10.

The boiler 10 is illustrated as supplying heat to several zones, such as $Z^1$, $Z^2$, $Z^3$, $Z^4$ and $Z^5$. Radiators $R^1$, $R^2$ and $R^5$ are located in the various zones, and break lines occur between the zones $Z^3$ and $Z^4$ to indicate that there may be any desired number of zones, or, in some installations a single zone, or several radiators may be provided at different points in a single room.

For each zone there is a room thermostat $RT^1$, $RT^2$, and $RT^3$, etc. for controlling air vents $AV^1$, $AV^2$ and $AV^5$, etc. The radiators are connected by piping 15 with the steam space in the boiler 10, a return pipe 17 being provided for flow of condensate back to the boiler.

A vacuum breaker valve 18 may be mounted in the piping system and includes a casing having a valve seat 19. A combined float and temperature responsive valve plug 20 coacts therewith, the plug being secured to a hollow float 21 having, for its bottom, a diaphragm 22. The float 21 has therein a volatile fluid which, upon expansion due to a certain temperature affecting the float, will snap the diaphragm 22 to the convex position to thereby close the plug 20 against the seat 19. Upon cooling of the float 21, and consequent condensation of the volatile fluid therein, the plug 20 will leave the seat 19 to open the steam pipe system 16 to atmosphere.

The air vents AV are shown in detail in Figure 2. Each one includes a casing 23 having a threaded boss 24 screwed into the radiator adjacent the top thereof. A head 25 is mounted on the casing 23, and has therein a valve seat 26. A combined float and temperature operated valve

27 is coactable therewith, the valve being carried by a float 28 having a diaphragm-like bottom 29. Volatile fluid 30 is provided therein to act in the same capacity as described in connection with the vacuum breaker valve 18. The bottom 29 of the float 28 rests on a projection 31 which extends upwardly from the bottom of the casing 23. A syphon tube 32 is connected with the projection 31 by extending therethrough and having its end 33 flared, the depending end of the syphon tube entering the radiator to equalize pressure in the casing 23 with that in the radiator.

The head 25 has a plate 34 secured thereto as by screws 36, with a gasket 37 interposed between the head and the plate. The plate 34 has a valve seat 38 with which an electrically operated valve plug 39 is adapted to coact at times. The plug 39 has a ferrous or magnetic plunger 40 normally elevated by a spring 41, but shown lowered in Figure 2 due to energization of a solenoid 42. The solenoid 42 is enclosed in a cover 43 secured to the plate 34 by screws 44.

Each coil 42 is connected in circuit with its respective room thermostat, and the circuit of each of the solenoids 42 includes a relay coil 45. The relay coil 45, when energized, closes the main switch 15, as indicated in Figure 1. A low voltage current may be supplied for the solenoids 42 and the relay coil 45 by a step down transformer T.

In the modification shown in Figure 3 the parts corresponding to Figure 2 are given the same reference numeral, with the addition of *a*. In addition to these parts, a second solenoid coil 46 is provided. The coil 46, when energized, is adapted to lift a plunger 47 having a sleeve 48 extending therefrom. The sleeve 48 is pivoted to a latch 49 so that when the coil 46 is energized the latch is released from a head 50 of a stem 51ª extending upwardly from the plunger 40ª. Normally, the weight of the plunger 47 tends to lower the latch 49 to the latched position shown in Figure 3.

A pair of switches 51 and 52 is also controlled by the plunger 47. The switches 51 and 52 normally assume the closed position shown by solid lines in Figure 3, but are open-circuited whenever the coil 46 is energized and the plunger 47 thereby raised to the position illustrated by dotted lines. An insulating rod 53 serves as an operative connection between the latch 49 and the switches 51 and 52. The switches 51 and 52 are connected, as illustrated, by electric wiring with the relay coil 45 and a room thermostat RT which is of the double-throw or three-wire type.

*Practical operation*

In the operation of my heating system, describing first the operation of Figures 1 and 2, when any zone, such as $Z^1$, calls for heat (the movable blade of the room thermostat $RT^1$ moving to cold position against the contact of the room thermostat), a secondary circuit is completed through the room thermostat, the solenoid 42 of the air vent $AV^1$ and the relay coil 45. Energization of the relay coil closes the main switch 15 for operating the burner B and thereby generating steam in the boiler 10. Energization of the solenoid 42 lowers the plunger 40 to the position shown in Figure 2, thus opening the valve 39. Assuming that the radiator $R^1$ is cold, and that there is not an excessive accumulation of condensate in the air vent $AV^1$, the valve 27 would also be in the open position shown in Figure 2. If the other thermostats are not calling for heat, their solenoids 42 would not be energized, and, accordingly, their valves 39 would be closed, thus air blocking their respective radiators against entry of steam to the radiators in those particular zones. Assuming, also, that the steam pressure has reduced to atmospheric, due to an idle period of the boiler, the thermostatic valve 20—21—22 of the vacuum breaker 18 would be in open position the same as the valve 27—28—29 illustrated in Figure 2, thus having admitted air to the piping 16 to prevent a sub-atmospheric pressure therein that would require prolonged operation of the burner B to raise the steam pressure to a point above atmospheric pressure.

As the steam is generated, it will pass through the vacuum breaker valve 19—20 and volatize the fluid in the float 28, causing the diaphragm 22 to snap to convex position, thereby closing the valve 19—20, as soon as steam at higher than atmospheric pressure is generated. Thereafter, the steam will flow into the radiator $R^1$, displacing air therefrom through the valve seats 26 and 38 of the air vent $AV^1$. The air then passes out through a port 54 in the cover 43, and when steam finally follows the air, the fluid 30 in the float 28 will be volatized for snapping the diaphragm 29 to its convex position. This will close the valve 27 against the seat 26 to prevent the escape of steam into the room, and the air vent casing 23 will thereafter gradually radiate its heat to the atmosphere. This will result in the fluid 30 again being condensed and finally snapping the diaphragm 29 to concave position for opening the valve 27, these operations continuing intermittently as long as the solenoid 42 remains energized.

When the zone $Z^1$ is satisfied, the room thermostat $RT^1$ will move to hot position or open-circuit position, thereby deenergizing the solenoid 42. If none of the other room thermostats is closed the relay coil 45 will also be deenergized, thereby stopping operation of the burner B. If, however, any of the other room thermostats are closed, their solenoids 42 will be energized for permitting air to pass out of the radiators, and, therefore, steam to enter. At the same time, the coil 45 will remain energized to keep the burner B in operation.

In connection with the modified construction shown in Figure 3, when the room thermostat RT closes cold, the circuit through the room thermostat may be traced to the top wire of the solenoid 42ª and then from the bottom wire thereof through the relay coil 45, in the same manner as described in connection with the solenoid 42. As soon as the solenoid 42ª is energized, it lowers the plunger 40ª, which normally assumes the raised dotted position due to the spring 41ª therein, and, accordingly, normally raises the head 50 of the stem 51ª to the dotted position where the latch 49 must remain in its dotted position. Lowering of the head 50 permits the latch 49 to assume the full-line position, thereby closing the switch 51, which, it will be noted, shunts the solenoid 42ª and thereby operatively deenergizes it after an impulse of current has gone through it. The current can continue, however, through the switch 51 to the relay coil 45.

When the room is satisfied, and the room thermostat closes hot, the circuit from it passes through the closed switch 52, and the solenoid 46, and then the relay coil 45. This causes energization of the coil 46 so that the plunger 47 is

raised for releasing the latch **49**, thereby permitting the plunger **40a** to rise, and the valve **39** to close. At the same time, the connection **53** opens both switches **51** and **52**, thereby conditioning the switch **41** for the next call for heat by the room thermostat and deenergizing the coil **46** after a short impulse of current has passed therethrough.

If it is undesirable to deenergize the relay coil **45** while the movable blade of the room thermostat RT is moving from the cold contact to the hot contact, the contact action may be of the overlapping type. The arrangement shown in Figure 3 eliminates the necessity of continuous energization of the solenoid **42a** while the room thermostat is calling for heat, and thereby eliminates the noise attendant thereto, especially when alternating current is used. Both the coils **42a** and **46** are operated by short impulses of current at the beginning of the operation of each, and then automatically deenergized by the respective switches **51** and **52**.

Although I have referred to the elements $R^1$, $R^2$, $R^3$, $R^4$ and $R^5$ as being radiators, they may be convection type or unit heaters, and, obviously, the system can be applied to a single zone as well as to a plurality of zones. My arrangement of electrically operated air vents provide an effective control means for the steam by air blocking any radiator that it is not desired to heat. A limit control LC has been shown conventionally, and other switch controls, such as low water cut-offs, and, in the case of stokers, a hold-fire control, may be used with my system in the conventional manner.

Some changes may be made in the construction and arrangement of the parts of my system without departing from the real spirit and purpose of my invention, and it is my intention to cover by my claims any modified forms of structure, or use of mechanical equivalents, which may be reasonably included within their scope.

I claim as my invention:

1. In a one-pipe heating system for a plurality of zones, a steam generator, a radiator in each zone, a room thermostat in each zone for controlling its respective radiator, an air vent comprising a single valve at each radiator for air blocking the radiators against entry of steam thereto when said valve is closed, electrically operated means for effecting opening of the air vent valve of any of said radiators in response to a call for heat by its respective room thermostat and for permitting the valve to close when the call for heat is satisfied, means for effecting operation of said steam generator when any of said room thermostat calls for heat, and a vacuum breaker valve for admitting air to the system when said steam generator is not in operation.

2. In a one-pipe heating system, a steam generator, a radiator, a room thermostat in the room containing said ratiator, an air vent for said radiator for air blocking the radiator against entry of steam thereto, said air vent having a pair of valves in series, a thermostatic float for controlling one of said valves, means under control of said room thermostat for effecting opening of the other valve and a second means, also under control of said room thermostat, for effecting operation of said steam generator, both in response to a call for heat by said room thermostat, and a vacuum breaker valve for admitting air to the system when said steam generator is not in operation.

3. In a heating system, a steam generator, a radiator, a room thermostat for controlling said radiator, an air vent valve for said radiator for air blocking the radiator against entry of steam thereto, electrically operated means for effecting opening of said air vent valve to atmosphere in response to a call for heat by said room thermostat, means for effecting operation of said steam generator simultaneously with the opening of said air vent valve, and a thermostatic-float operated valve for admitting air to the system when said steam generator is out of operation.

4. In a heating system, a steam generator, a radiator, a room thermostat for controlling said radiator, an air vent for said radiator including a combined float and temperature responsive valve operable to closed position by an accumulation of condensate in the air vent or by a rise of temperature within the air vent by entry of steam thereto, said air vent having a second valve normally closed for air blocking the radiator against entrance of steam, said room thermostat being connected with said second valve for effecting opening thereof in response to a cold condition of said room thermostat to thereby open the second valve to atmosphere, operating means for said steam generator, said room thermostat being connected with said operating means to energize it upon the thermostat assuming cold position, and means for admitting air to the system when said room thermostat is in hot position.

5. In a heating system for a plurality of zones, a steam generator, a radiator in each of said zones, a room thermostat in each zone for controlling its respective radiator, an air vent at each radiator including a combined float and temperature responsive valve operable to closed position by an accumulation of condensate in the air vent or by a rise of temperature within the air vent due to entry of steam thereto, said air vents each having a single electrically operated valve normally closed for air blocking the radiators against entrance of steam, said room thermostats being connected with said electrically operated valves of the respective radiators for effecting operation thereof to open position relative to atmosphere in response to a cold condition of the room thermostat for the respective radiator and being connected with means for effecting operation of said steam generator in response to any of said room thermostats assuming cold position, and a valve for admitting air to the system when each of said room thermostats is responding to a hot condition.

6. A heating system of the single pipe type for a plurality of zones comprising a steam generator, a radiator and a room thermostat in each zone, an air vent for each radiator comprising a pair of valves in series with each other, one being float and temperature operated and the other being under control of its respective room thermostat to effect opening thereof to atmosphere when the room thermostat calls for heat and closing of the space in the radiator to atmosphere when the call for heat is satisfied, said other valves having electromagnetic operating means in the circuits of said room thermostats, a control circuit for said steam generator energized by closure of any of said room thermostats, and a vacuum breaker valve for admitting air to said pipe when all of said electomagnetically operated valves are closed.

7. In a heating system for a plurality of zones, a steam generator, a radiator in each zone, a

room thermostat in each zone having a closed cold circuit and a closed hot circuit, an air vent for each radiator including electromagnetic means for opening said air vent, a latch for latching the air vent in open position and a second electromagnetic means for releasing said latch, said room thermostat in closed cold position energizing said first electromagnetic means to open said air vent, a relay in circuit with said first electromagnetic means and operable to control said steam generator, said room thermostat in closed hot position energizing said second electromagnetic means for releasing said latch.

8. In a heating system of the character disclosed, a steam generator, a radiator, a room thermostat having a cold circuit and a hot circuit, an air vent for said radiator including means for opening said air vent, a latch for latching the air vent in open position and a second means for releasing said latch, said room thermostat in cold position operating said first means for opening said air vent and in hot position operating said second means for releasing said latch.

9. In a heating system of the character disclosed, a steam generator, a radiator, a room thermostat having a cold circuit and a hot circuit, an air vent for said radiator including electromagnetic means for opening said air vent, a latch for latching the air vent in open position and a second electromagnetic means for releasing said latch, said room thermostat in cold position energizing said first electromagnetic means, a switch operated thereby to deenergize said first electromagnetic means after said latch has latched said air vent in open position, means to operate said steam generator by said room thermostat when in cold position, said room thermostat in hot position energizing said second electromagnetic means for releasing said latch, and a second switch operated thereby to deenergize said second electromagnetic means.

10. In a heating system for a plurality of zones, a steam generator, a radiator in each zone, a room thermostat in each zone having a cold circuit and a hot circuit, an air vent for each radiator including means for opening said air vent, a latch for latching the air vent in open position and a second means for releasing said latch, said room thermostat in cold position operating said first means and latching said latch and thereupon rendering said first means inoperable, said room thermostat in cold position being operable to control said steam generator to effect operation thereof, said room thermostat in hot position operating said second means for releasing said latch, and thereupon rendering said second means inoperable.

11. In a heating system of the character disclosed for a plurality of zones, a steam generator, a radiator in each zone, a room thermostat in each zone having a cold circuit and a hot circuit, an air vent for each radiator including electrically operated means for opening said air vent, a latch for latching the air vent in open position and a second electrically operated means for releasing said latch, said room thermostat in cold position energizing said first electromagnetic means and latching said latch and thereupon shunting said first electrically operated means out of the circuit, a relay in circuit with said first electromagnetic means and operable to control said steam generator, said room thermostat in hot position energizing said second electrically operated means for releasing said latch and thereupon opening the circuit of said second electrically operated means, said air vent including a combination condensate level and temperature responsive valve operable to closed position by accumulation of condensate in said air vent or by a rise of temperature therein due to entrance of steam thereto.

12. In a heating system of the character disclosed for a plurality of zones, a steam generator, a radiator in each zone, a room thermostat in each zone having a cold circuit and a hot circuit, an air vent for each radiator including electrically operated means for opening said air vent, a latch for latching the air vent in open position and a second electrically operated means for releasing said latch, said room thermostat in cold position energizing said first electromagnetic means and latching said latch and thereupon shunting said first electrically operated means out of the circuit, and a relay in circuit with said first electromagnetic means and operable to control said steam generator, said room thermostat in hot position energizing said second electrically operated means for releasing said latch and thereupon opening the circuit of said second electrically operated means.

13. In a heating system of the character disclosed, a steam generator, a radiator and a room thermostat in each zone, each thermostat having a cold circuit and a hot circuit, an air vent for each radiator including a first means for opening said air vent, a latch for latching the air vent in open position and a second means for releasing said latch, said room thermostat in cold position operating said first means and latching said latch, said room thermostat in hot position operating said second means for releasing said latch, said air vent including a combination condensate level and temperature responsive valve operable to closed position by accumulation of condensate in said air vent or by a rise of temperature therein due to entrance of steam thereto, and a vacuum breaker in the pipe system of said heating system.

JOHN W. MONROE.