OPIC
OFFICE DE LA PROPRIÉTÉ INTELLECTUELLE DU CANADA

CIPO
CANADIAN INTELLECTUAL PROPERTY OFFICE

(12) (19) (CA) **Demande-Application**

(21) (A1) **2,278,281**
(22) 1999/07/20
(43) 2000/06/18

(72) CUTSHAW, AL, CN
(71) AMERICAN STANDARD INC.,, US

(51) Int.Cl.[6] E03C 1/24, E03C 1/232
(30) 1998/12/18 (09/215,878) US

(54) **DISPOSITF DE VIDANGE DE TROP-PLEIN**
(54) **OVERFLOW DRAIN APPARATUS**

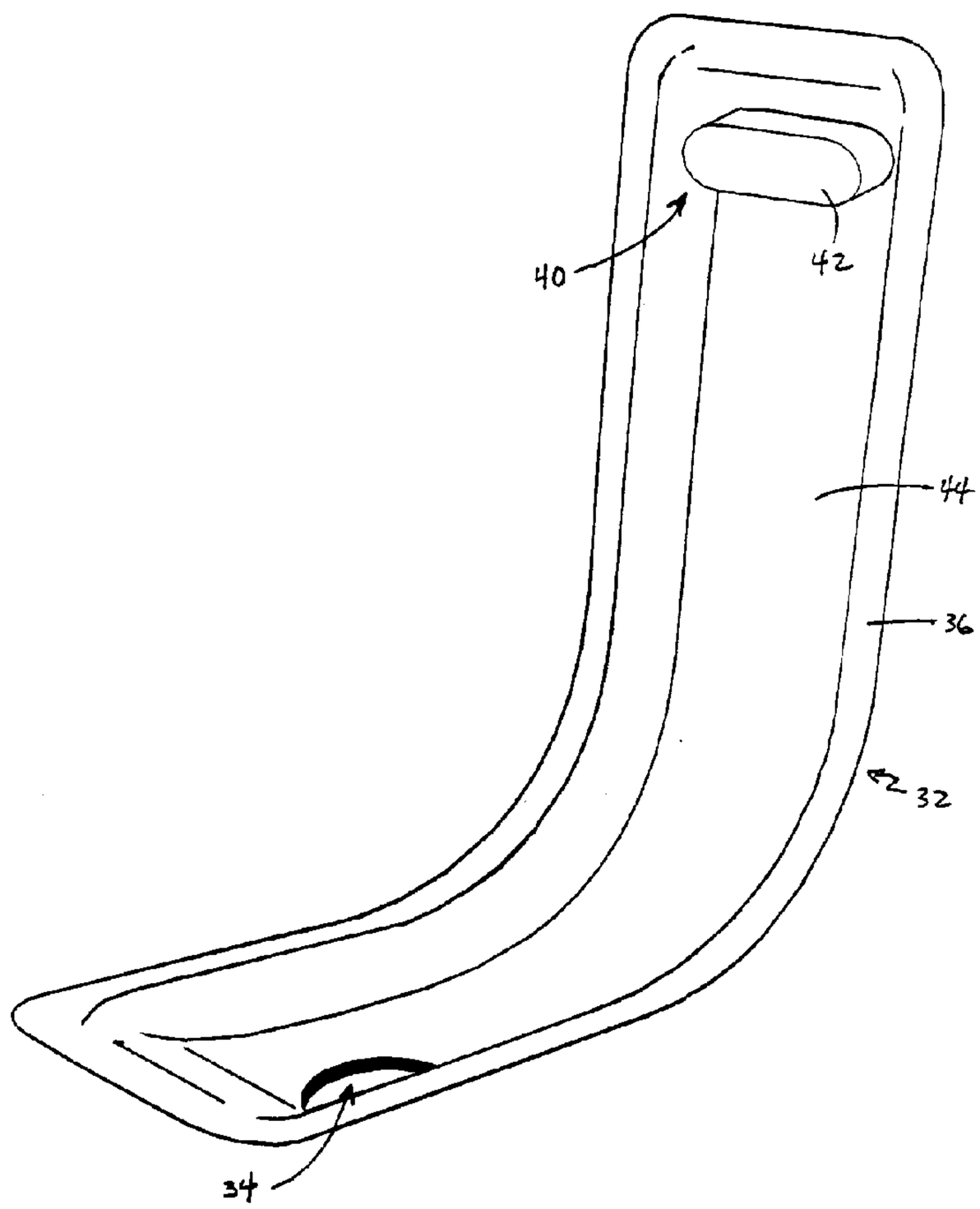

(57) In one preferred embodiment, the present invention relates to an overflow drain apparatus for a sanitary fixture having a bowl with an interior, an exterior, a drain opening extending through the bowl, and an overflow opening disposed above the drain opening and extending through the bowl. The overflow drain apparatus includes a duct attached to the exterior of the bowl and positioned over both the drain opening and the overflow opening. The duct is provided with a drain aperture disposed near the drain opening, and the duct includes a peripheral flange which conforms to at least a portion of the exterior of the bowl. The duct also includes a protruding portion for supporting a fastener connected to the fixture.

ABSTRACT OF THE DISCLOSURE

In one preferred embodiment, the present invention relates to an overflow drain apparatus for a sanitary fixture having a bowl with an interior, an exterior, a drain opening extending through the bowl, and an overflow opening disposed above the drain opening and extending through the bowl. The overflow drain apparatus includes a duct attached to the exterior of the bowl and positioned over both the drain opening and the overflow opening. The duct is provided with a drain aperture disposed near the drain opening, and the duct includes a peripheral flange which conforms to at least a portion of the exterior of the bowl. The duct also includes a protruding portion for supporting a fastener connected to the fixture.

OVERFLOW DRAIN APPARATUS

BACKGROUND OF THE INVENTION

The present invention is directed to an overflow drain system for sanitary fixtures, and in particular to an overflow drain system which interconnects the overflow opening and the drain opening of a sanitary fixture.

Sanitary fixtures include bathtubs, spas, whirlpool tubs and the like. The sanitary fixtures are generally provided with a drain opening located in the floor of the fixture and an overflow opening located in an end wall or a side wall nearest the overflow opening and positioned above the overflow opening, typically proximate the top rim of the fixture. A conduit or tube is generally provided to connect the overflow opening with the drain opening in order that both empty into a main drain.

The sanitary fixtures are typically made from chinaware, cast iron, enameled steel, or acrylic. Various sanitaryware made from chinaware and cast iron include an integral passage which serves as an overflow system. On the other hand, sanitary fixtures made of enameled steel or acrylic typically employ an overflow system which is independent from the fixture.

It is desirable to provide a new overflow drain apparatus or system which is easy to install. It is also desirable for the overflow drain apparatus to be securedly mounted to the sanitaryware fixture.

One object of the present invention is to provide an overflow drain apparatus that is easy and inexpensive to manufacture and install. Another object of the present invention is to reduce the time necessary for installation of a sanitary fixture. Yet another object of the present invention is to securely bond an overflow drain apparatus to a sanitaryware fixture. Yet another object of the present invention is to provide an overflow drain apparatus which comprises a

one-piece or unitary duct component, and that the overflow apparatus be able to withstand the pressures exerted during the molding and attachment processes.

Other objects of the present invention, as well as particular features, elements, and advantages thereof, will be elucidated in, or be apparent from, the following description and the accompanying drawing figures.

SUMMARY OF THE INVENTION

In one aspect, the present invention relates to an overflow drain apparatus for a sanitary fixture having a bowl with an interior, an exterior, a drain opening, and an overflow opening. The overflow drain apparatus comprises a duct attached to the exterior of the bowl and positioned over both the drain opening and the overflow opening. The duct is provided with a drain aperture disposed proximate the drain opening, the duct including a peripheral flange which conforms to at least a portion of the exterior of the bowl, and the duct including mounting means for supporting a fastener. In a preferred embodiment, the mounting means comprises a protruding portion of the duct. The protruding portion is preferably disposed on the side of the duct which faces the exterior of the bowl. Further preferably, the protruding portion is adapted to be spaced away from the exterior of the bowl, for example when the duct is brought into contact with the bowl. An adhesive material is applied between the peripheral flange and the exterior of the bowl for attaching the duct to the sanitary fixture. The apparatus may further comprise a fastener, or plurality of fasteners, extending from the bowl and attached to the mounting means. An escutcheon is preferably disposed on the interior of the bowl, wherein the fastener connects the escutcheon to the duct. The fastener, or fasteners, preferably extends through the overflow opening.

In another aspect, the present invention relates to a bathtub comprising a bowl, an overflow drain duct attached to the exterior of the bowl, and an adhesive material disposed between the bowl and the duct. The overflow drain duct is positioned over both the drain opening and the overflow opening in the tub, and

the duct is provided with the drain aperture disposed proximate the drain opening. The duct includes a peripheral flange which conforms to at least a portion of the exterior of the bowl. The duct also includes a mounting means for supporting a fastener.

In yet another aspect, the present invention relates to a bathtub comprising a bowl, a one-piece overflow drain duct attached to the exterior of the bowl, and an adhesive material disposed between the exterior of the bowl and the duct. The duct is positioned over both the drain opening and the overflow opening in the bowl, and the duct is provided with a drain aperture disposed proximate the drain opening. The duct includes a peripheral flange which conforms to at least a portion of the exterior of the bowl and which contacts the adhesive material. The duct also includes a protruding portion disposed on the inner side of the duct and facing the exterior of the bowl.

BRIEF DESCRIPTION OF THE DRAWINGS

Understanding of the present invention and the various aspects thereof will be facilitated by reference to the accompanying drawing figures, submitted for purposes of illustration only and not intended to limit the scope of the invention, in which:

FIGURE 1 is a perspective view of a bathtub having a known conventional overflow drain arrangement;

FIGURE 2 is a perspective view of a bathtub provided with an overflow drain apparatus in accordance with the present invention;

FIGURE 3 is a side elevational, partially cut-away view of an overflow drain duct according to the present invention;

FIGURE 4 is a representative cross section of the overflow drain apparatus of the present invention in the area labeled IV in Figure 3;

FIGURE 5 is a perspective view of a preferred embodiment of the overflow drain duct of the present invention;

FIGURE 6 is a perspective view of one embodiment of a drain assembly in accordance with the present invention; and

FIGURE 7 is a side elevational, partially cut-away view of a preferred embodiment of the present invention.

DETAILED DESCRIPTION OF THE PREFERRED EMBODIMENTS

Reference should now be made to the drawing figures, on which similar or identical elements are given consistent identifying numerals throughout the various figures thereof, and on which parenthetical references to figure numbers direct the reader to the view(s) on which the element(s) being described is (are) best seen, although the element(s) may also be seen on other views.

Figure 1 illustrates a conventional bathtub (10) with an overflow drain assembly (12) known in the prior art. The drain assembly (12) is comprised of various fittings and connections which must be assembled at the point of installation of the bathtub (10).

Figures 2-7 shows a preferred embodiment of the present invention. An overflow drain apparatus (18) forms part of a bathtub. The bathtub (20) is shown with a bowl (22) having an interior (24), an exterior (26), a drain opening (28) extending through the bowl (22), and an overflow opening (30) disposed above the drain opening (28) and extending through the bowl (22).

An overflow drain duct (32) is attached to the exterior (26) of the bowl (22) and positioned over both the drain opening (28) and the overflow opening (30). The duct (32) is preferably of unitary one-piece construction. The duct (32) is preferably made of plastic material, such as PVC, ABS or gel coats reinforced with fiberglass. The duct (32) may also be formed from metal or a composite material. The duct (32) is provided with a drain aperture (34) disposed proximate the drain opening (28). The duct (32) includes a peripheral flange (36) which conforms to at least a portion of the exterior (26) of the bowl (22). Preferably the peripheral flange (36) conforms closely to the exterior of the bowl (22). In one preferred embodiment, at least the exterior of the mating surface of the duct (32) is plastic or fiberglass reinforced gel coat which is advantageously implemented to spread the force of tightening or over-tightening or impact to the peripheral flange (36).

In a preferred embodiment, the duct (32) is a trough-shaped conduit having a generally concave cross-section. The duct (32) is attached, at least in part, by an adhesive material (38) disposed between the peripheral flange (36) and the exterior (26) of the bowl (22). Preferably, the adhesive material (38) forms a continuous seal around the periphery of the duct (32). A sealing and adhesive compound (38) such as room temperature vulcanizing (RTV) materials may be used. By way of example, silica gel or silicone may be deposited along the entire periphery of the flange (36). Typically, RTV materials may require several hours to cure, therefore the duct (32) should be held in place, for example by drain and overflow fittings or production fixtures, until cured.

As seen in Figures 5 and 7, the duct (32) preferably includes a mounting means (40) for supporting a fastener. The mounting means (40) preferably comprises a protruding portion (42) of the duct (32) which is disposed on the inner side (44) of the duct and faces the exterior (24) of the bowl (22) when applied to a sanitary fixture such as the illustrated bathtub (20).

Figure 6 illustrates a drain assembly or drain fitting (50) which is adapted to fit within the drain opening (28) of the bathtub (20) and the drain aperture (34) of the duct (32). Alternatively, a stopper may be disposed in the drain opening (28) of the tub (20).

As seen in Figure 7, the bathtub (20) preferably comprises an escutcheon (52) disposed on the interior (24) of the bowl (22) proximate the overflow opening (30). A fastener (62), or plurality of fasteners, then preferably connects the escutcheon (52) to the mounting means (40) of the duct (32).

Thus, an adhesive material (38), for example a sealing and adhesive compound such as room temperature vulcanizing material, may be advantageously deposited along the entire periphery of the flange (36) of the duct (32). A fastener (54), or fasteners, may connect the protruding portion (42) or mounting means (40) of the duct (32) to the escutcheon (52). Preferably, the fastener (54) or fasteners pass through the overflow opening (30) in the bowl (22). The protruding portion (42) of the duct (32) is preferably spaced away from the exterior (26) of the bowl (22) so as to improve the contact between the flange (36) of the duct (32) and the exterior (26) of the bowl (22) in order to ensure a complete seal around the periphery of the duct (32). Thus, the fastener (54) may be used to draw the duct (32) toward the exterior (26) of the bowl (22) in order to improve contact with the adhesive material (38) while the adhesive cures. That is, a bead of sealant and adhesive material such as RTV may be applied between the peripheral flange (36) of the duct (32) and the exterior (26) of the bowl (22). At least one of the fastener (54) and mounting means (40), the drain fitting (50), or production fixtures may then hold the duct (32) in position while the sealant (38) cures.

In a preferred embodiment the protrusion support (42) of the duct (32) is drilled and threaded to accept fastening means (54) such as mounting bolts which connect to the escutcheon plate (52). That is, the threads of the bolt (54) engage the protrusion (42). The protrusion (42) aids in the installation of the overflow

duct (32) to the exterior (26) of the tub (20) by allowing force applied by the bolts connecting the duct (32) to the escutcheon (52) to press and hold the duct (32) in position until the adhesive/sealant (38) is secured. Preferably, the protruding portion (42) lies on the centerline of the overflow opening (30) of the tub (20). Preferably, the protrusion (42) facilitates attachment of the escutcheon faceplate (52) and holds the overflow duct (32) in position during the curing of the adhesive/sealant (38).

After the duct (32) is affixed to the bowl (22), the drain assembly (50) is mounted within the drain opening (28) and drain aperture (34). A standpipe (60) extends through the openings (28, 34) and includes a flared upper end (62) which seals around the drain opening (28) of the tub (20) through compression of a gasket (64). The outer surface of the standpipe (60) is threaded to accommodate a nut (66) which compresses against the gasket (64) and the exterior of the duct (32). Water flowing into the duct (32) from the drain opening (28) and/or the overflow opening (30) may then flow out of the standpipe (60) into a main drain. The duct (32) is preferably rigid enough to allow the gasket (64) to be compressed against the duct (32) to form a seal.

The fastener (54) may be a bolt, screw, rivet, or the like. More than one fastener may be used. In addition, a combination of different types of fasteners may also be used.

The bathtub (20) may be comprised of metal, plastic material, or chinaware. The tub may also comprise one or more coatings. In one particularly preferred embodiment, the tub may be comprised of enameled steel or steel coated with porcelain, wherein the tub may be coated with appropriate coatings on both the interior and/or exterior surfaces. A base or ground coat may be applied, as well as a final cover coat, to one or more of the surfaces of the tub. A polymeric layer may be added to the exterior of the sanitary fixture, wherein the duct (32) of the present invention may be attached to the bowl (22) prior to the application of a

polymeric material, or the duct may be attached to a polymeric layer after the layer has cured on the exterior of the bowl.

It may be advantageous to smooth the surface of the tub (or its exterior coating), for example by sanding or other means of preparing a smoother surface, to improve the adhesion between the duct (32) and the tub (10). For example, if the duct (32) is to be attached to an acrylic surface, the acrylic surface may require leveling or smoothing prior to attachment of the duct so as to provide sufficient contact with the duct.

The overflow drain apparatus (18) of the present invention may be advantageously embodied in various types of sanitary fixtures, including bathtubs, spas, whirlpool tubs, sinks, lavatories, etc.

Thus, the overflow drain apparatus (18) of the present invention eliminates the need for additional overflow piping assembly. The concave cup shape of the duct (32) of the present invention provides an increased drainage area for reducing clogging. The present invention also reduces the need for maintenance access panels. Furthermore, the present invention can be installed and removed with slip fit connection to drain piping from the standpipe of the tub drain to the floor drain piping without the use of an access panel.

It will thus be seen that the objects set forth above, among those elucidated in or made apparent from, the preceding description, are efficiently attained and since certain changes may be made in the above construction without departing from the scope of the invention, it is intended that all matter contained in the above description or shown on the accompanying drawing figures shall be interpreted as illustrative only and not in a limiting sense.

It is also to be understood that the following claims are intended to cover all of the generic and specific features of the invention herein described and all

statements of the scope of the invention which, as a matter of language, might be said to fall therebetween.

What is claimed is:

1. An overflow drain apparatus for a sanitary fixture having a bowl with an interior, an exterior, a drain opening extending through said bowl and an overflow opening disposed above said drain opening and extending through said bowl, said overflow drain apparatus comprising:

a duct attached to the exterior of the bowl and positioned over both said drain opening and said overflow opening, said duct being provided with a drain aperture disposed proximate said drain opening, said duct including a peripheral flange which conforms to at least a portion of the exterior of the bowl, said duct including mounting means for supporting a fastener.

2. The overflow drain apparatus according to Claim 1 wherein said mounting means comprises a protruding portion of said duct.

3. The overflow drain apparatus according to Claim 2 wherein said protruding portion is disposed on the side of said duct which faces the exterior of the bowl.

4. The overflow drain apparatus according to Claim 3 wherein said protruding portion is adapted to be spaced away from the exterior of said bowl when said duct is brought into contact with the bowl.

5. The overflow drain apparatus according to Claim 1 wherein an adhesive material applied between said peripheral flange and the exterior of the bowl for attaching said duct thereto.

6. The overflow drain apparatus according to Claim 1 further comprising a fastener extending from the bowl and attached to said mounting means.

7. The overflow drain apparatus according to Claim 6 further comprising a plurality of fasteners extending from the bowl and attached to said mounting means.

8. The overflow drain apparatus according to Claim 6 further comprising an escutcheon disposed on the interior of the bowl, wherein said fastener connects said escutcheon to said duct.

9. The overflow drain apparatus according to Claim 6 wherein said fastener extends through said overflow opening.

10. The overflow drain apparatus according to Claim 1 wherein said sanitary fixture is a bathtub.

11. The overflow drain apparatus according to Claim 1 wherein said duct is fabricated from plastic.

12. The overflow drain apparatus according to Claim 1 wherein said duct is fabricated from fiberglass reinforced plastic.

13. The overflow drain apparatus according to Claim 1 further comprises a drain assembly.

14. The overflow drain apparatus according to Claim 1 wherein said duct is of unitary construction.

15. A sanitary fixture comprising:

a bowl with an interior, an exterior, a drain opening extending through said bowl and an overflow opening disposed above said drain opening and extending through said bowl;

an overflow drain duct attached to the exterior of said bowl and positioned over both said drain opening and said overflow opening, said duct being provided with a drain aperture disposed proximate said drain opening, said duct including a peripheral flange which conforms to at least a portion of the exterior of said bowl, said duct including mounting means for supporting a fastener; and

an adhesive material disposed between said peripheral flange and the exterior of said bowl for attaching said duct thereto.

16. The sanitary fixture according to Claim 15 wherein said duct is of unitary construction.

17. The sanitary fixture according to Claim 15 further comprising a fastener affixed to said mounting.

18. The sanitary fixture according to Claim 17 further comprising an escutcheon disposed on the interior of said, wherein said fastener connects said escutcheon to said mounting means.

19. The sanitary fixture according to Claim 17 wherein said mounting means comprises a protruding portion of said duct disposed on the inner side of said duct and facing the exterior of said bowl.

20. The sanitary fixture according to Claim 15 further comprising a drain assembly disposed in said drain opening and said drain aperture.

21. The sanitary fixture according to Claim 15 wherein said duct is a trough-shaped conduit having a generally concave cross-section.

22. A bathtub comprising:

a bowl with an interior, an exterior, a drain opening extending through said bowl and an overflow opening disposed above said drain opening and extending through said bowl;

a one-piece overflow drain duct attached to the exterior of said bowl and positioned over both said drain opening and said overflow opening, said duct being provided with a drain aperture disposed proximate said drain opening, said duct including a peripheral flange which conforms to at least a portion of the

exterior of said bowl, said duct including a protruding portion disposed on the inner side of said duct and facing the exterior of said bowl; and

an adhesive material disposed between said peripheral flange and the exterior of said bowl for attaching said duct thereto.

23. The bathtub according to Claim 22 further comprising a fastener affixed to said mounting.

24. The bathtub according to Claim 23 further comprising an escutcheon disposed on the interior of said bowl, wherein said fastener connects said escutcheon to said mounting means.

25. The bathtub according to Claim 23 wherein said fastener extends through said overflow opening.

26. The bathtub according to Claim 22 further comprising a drain assembly disposed in said drain aperture and said drain opening.

27. The bathtub according to Claim 22 further comprising a stopper disposed in said drain opening.

28. The bathtub according to Claim 22 wherein said duct is a trough-shaped conduit having a generally concave cross-section.

29. The bathtub according to Claim 22 wherein said bowl is comprised of metal.

30. The bathtub according to Claim 29 wherein said bowl is comprised of steel.

31. The bathtub according to Claim 22 wherein said bowl is comprised of enameled steel.

Ridout & Maybee
[illegible]
[illegible]
Toronto, Canada [illegible]
Patent Agents of the Applicant

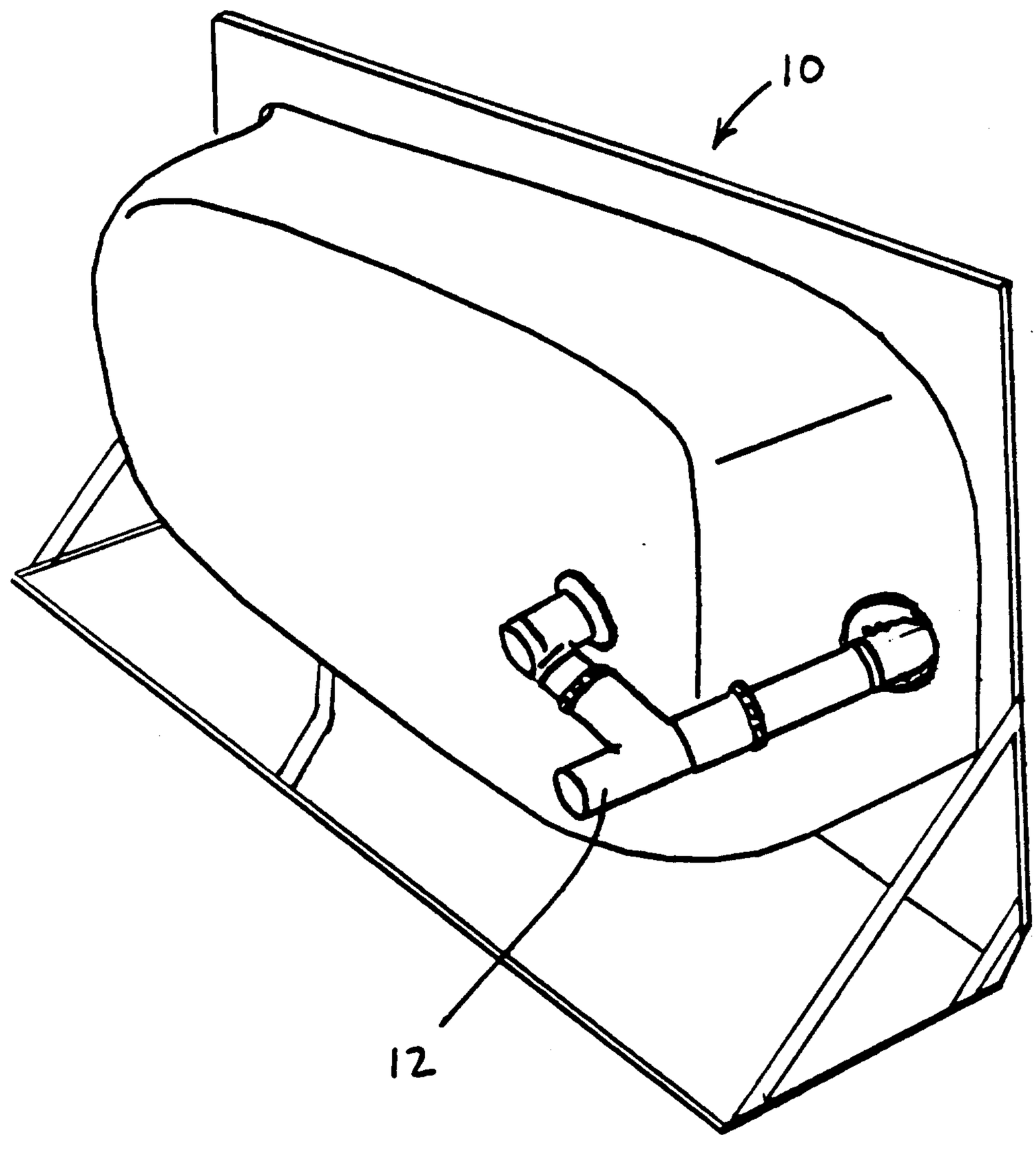

FIG. 1
PRIOR ART

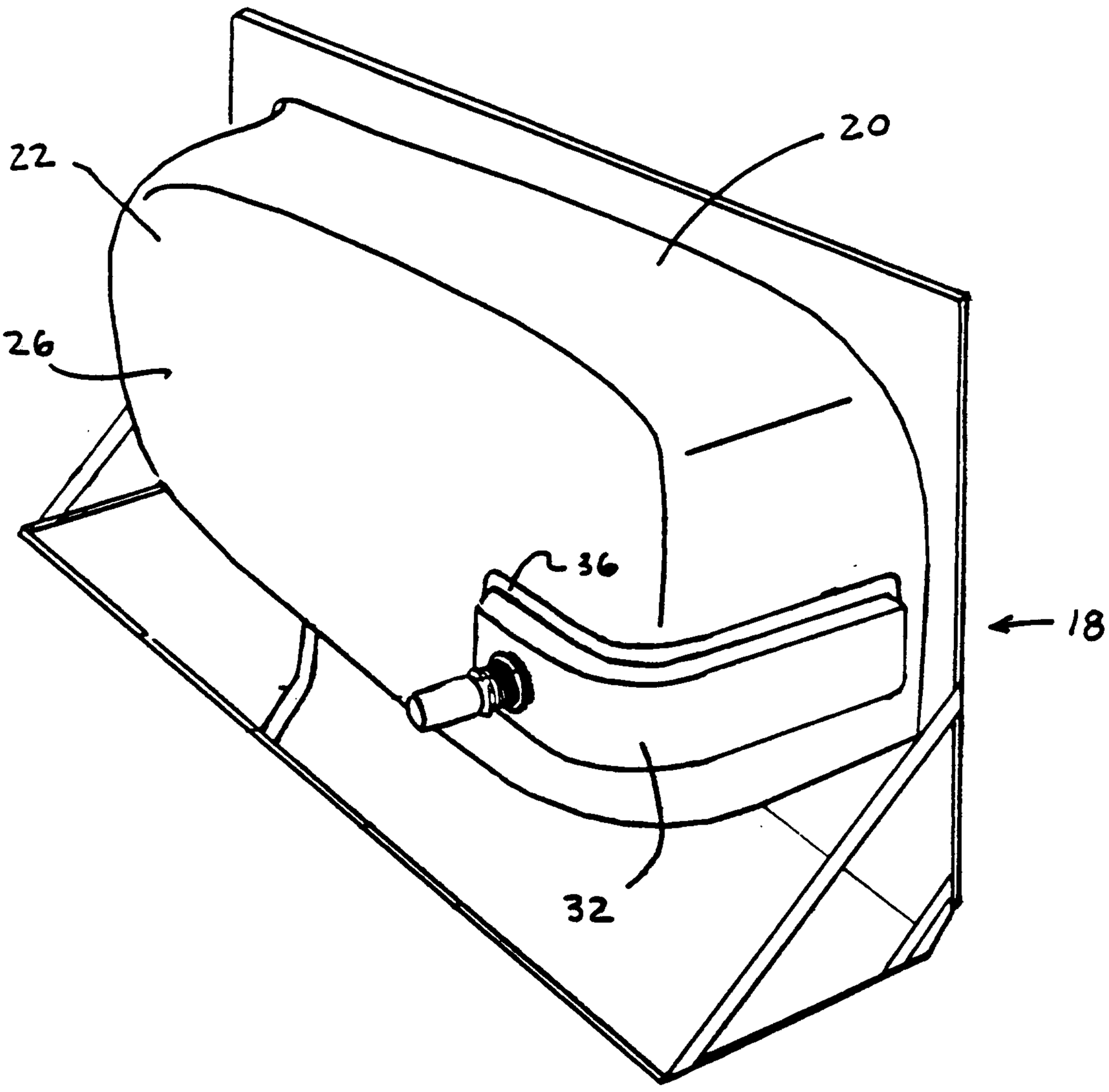

FIG. 2

FIG. 3

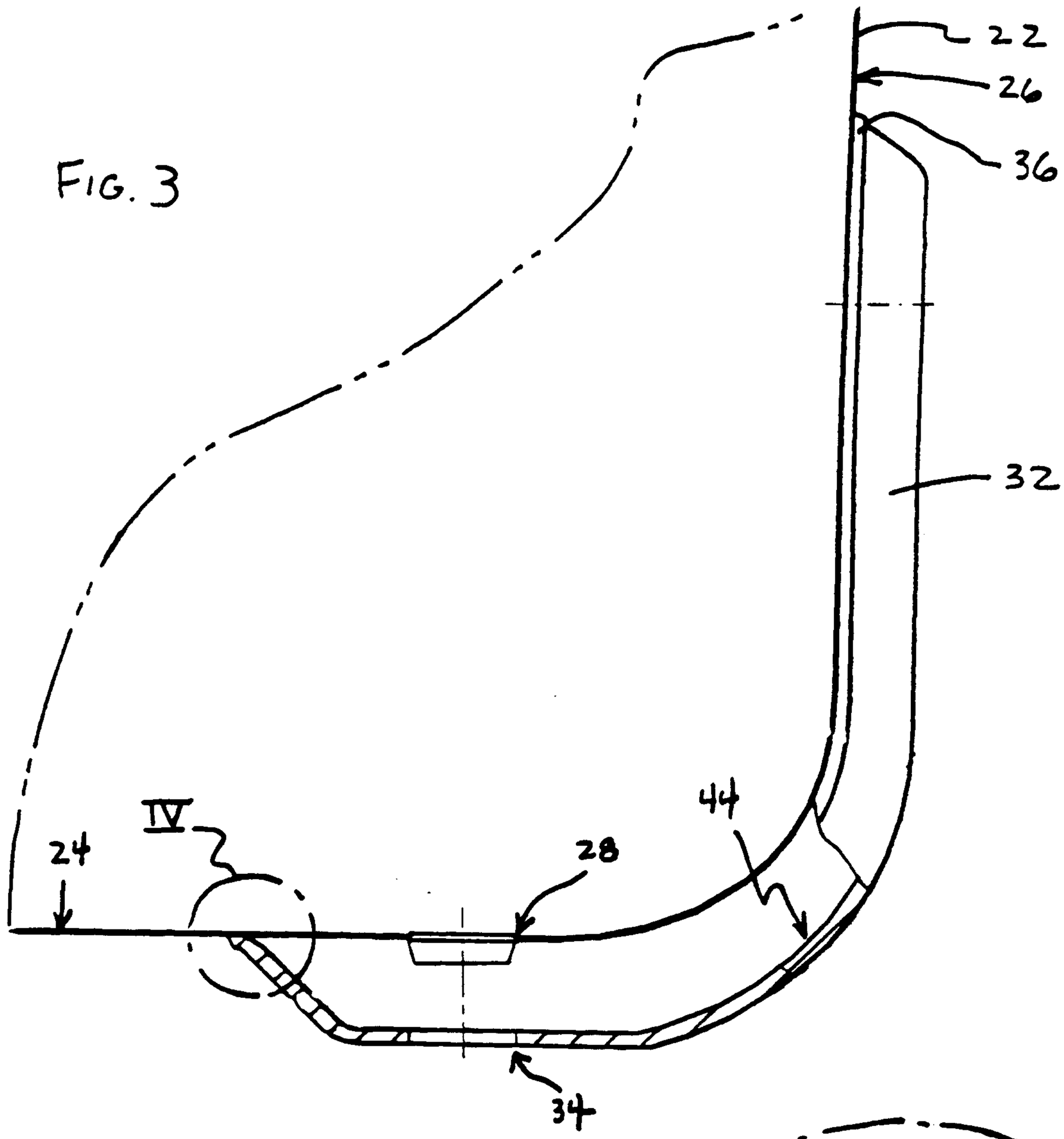

FIG. 4

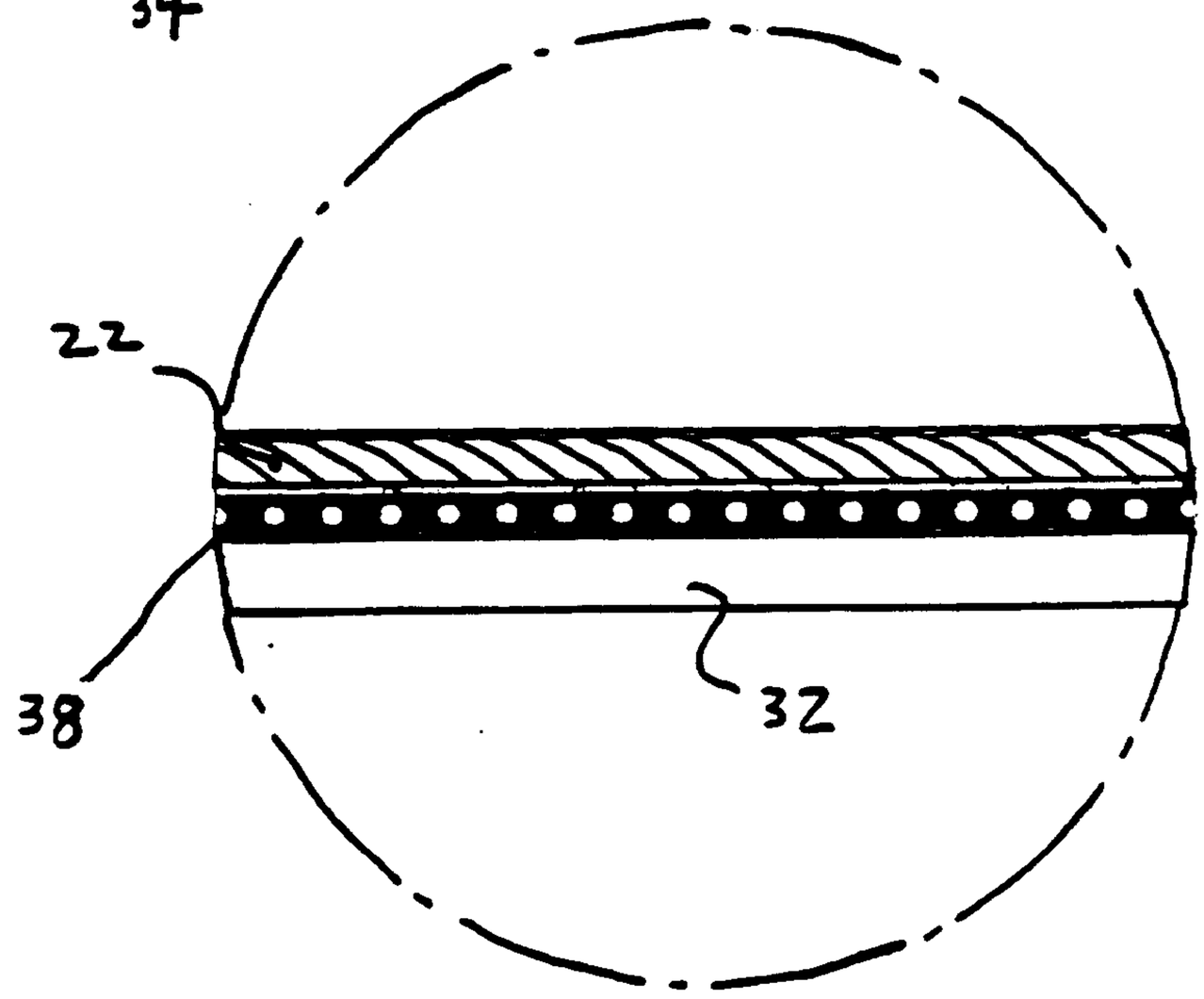

FIG. 6

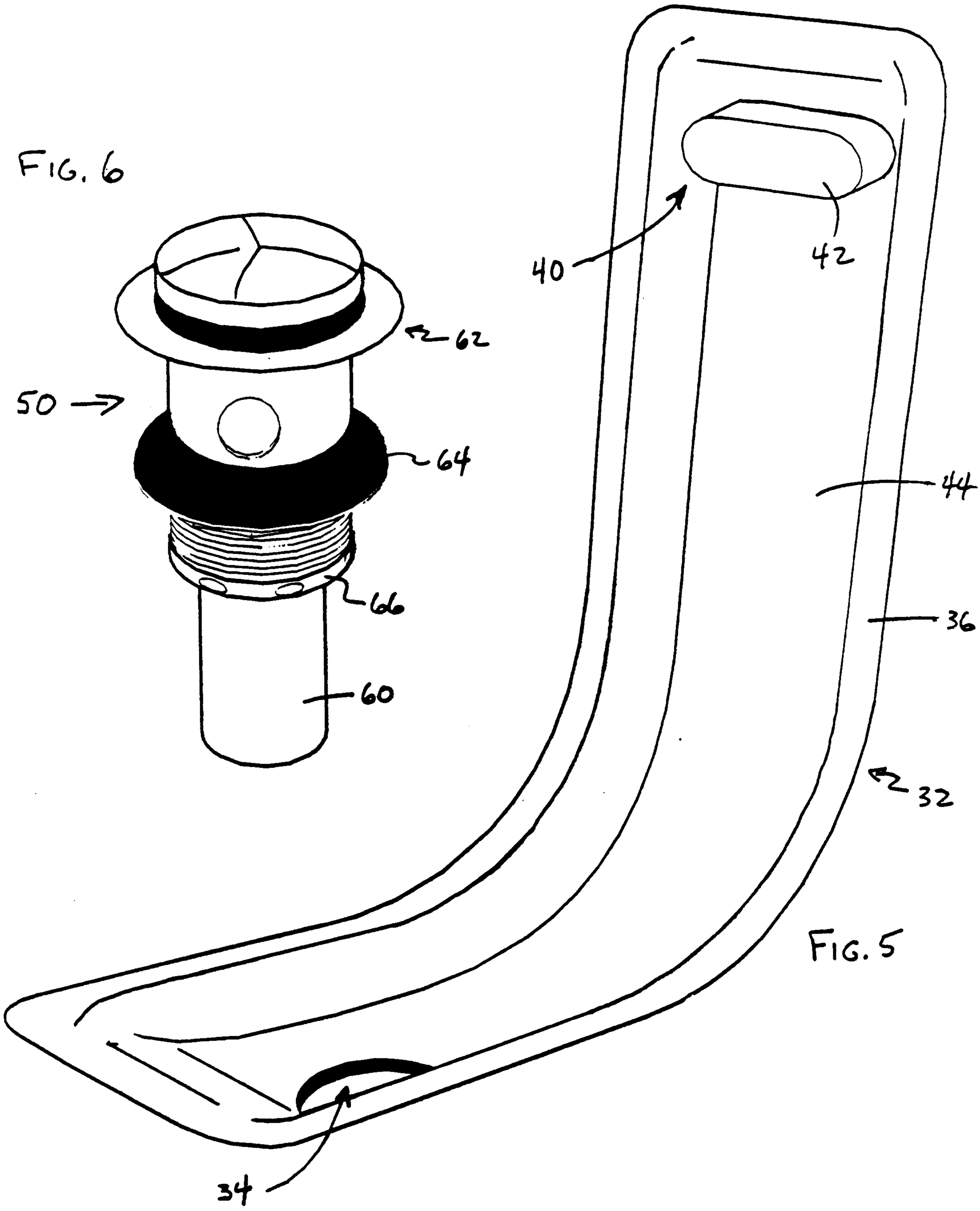

FIG. 5
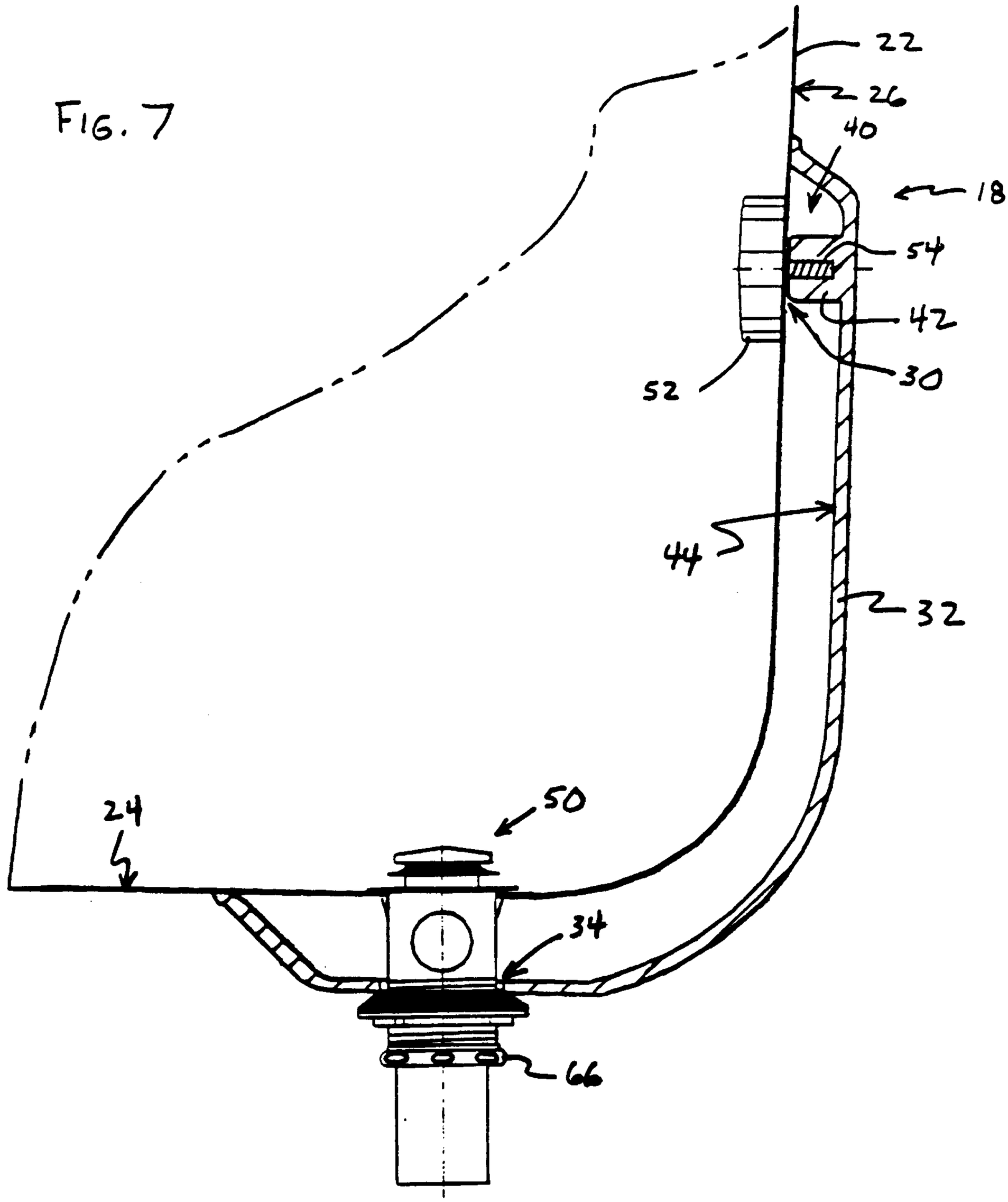
FIG. 7