May 3, 1960 E. W. HEWITT 2,935,563

MESSAGE CUTTER AND CONVEYOR

Filed Feb. 19, 1954 5 Sheets-Sheet 1

FIG 1

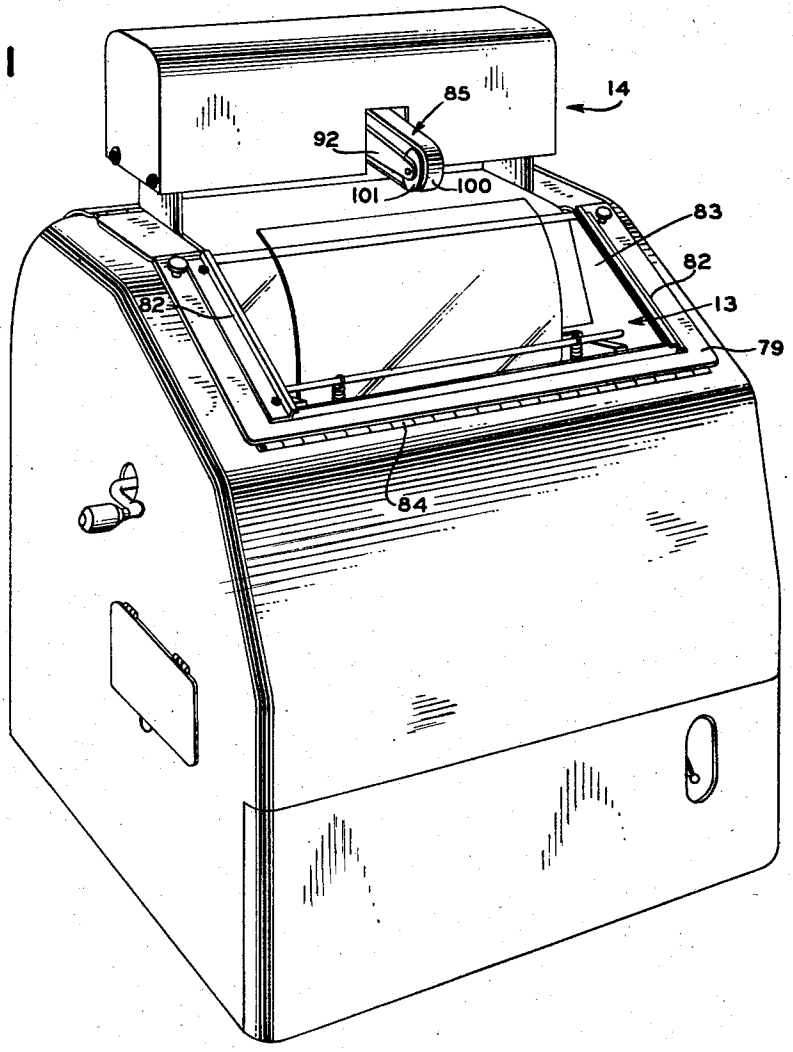

FIG 8

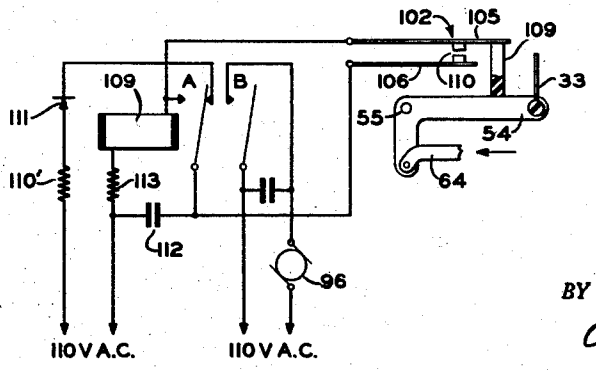

INVENTOR.
E. W. HEWITT

BY
Edward R. Hyde Jr.
ATTORNEY

MESSAGE CUTTER AND CONVEYOR

Filed Feb. 19, 1954 5 Sheets-Sheet 2

FIG 2

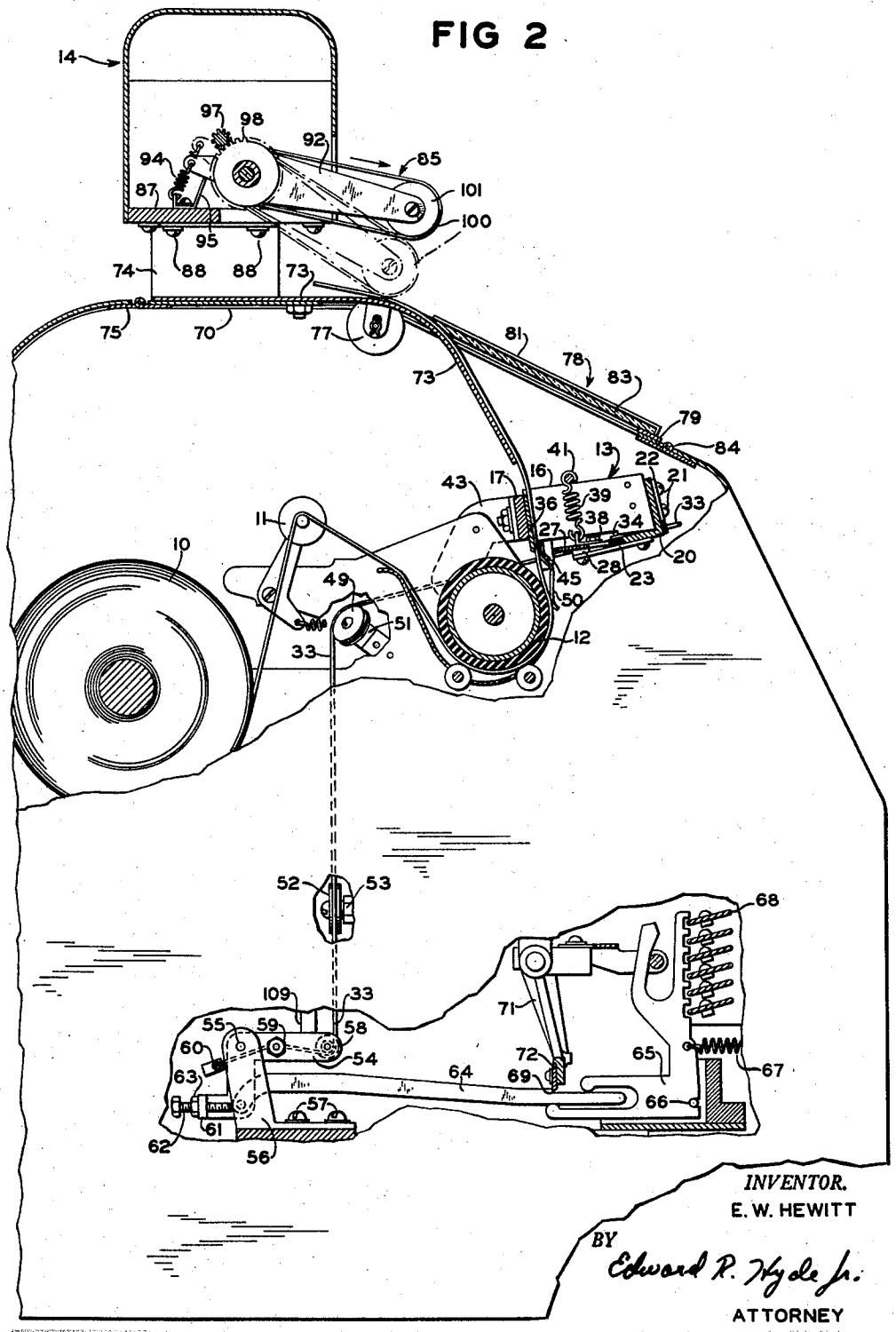

INVENTOR.
E. W. HEWITT
BY
Edward R. Hyde Jr.
ATTORNEY

MESSAGE CUTTER AND CONVEYOR

Filed Feb. 19, 1954 5 Sheets-Sheet 3

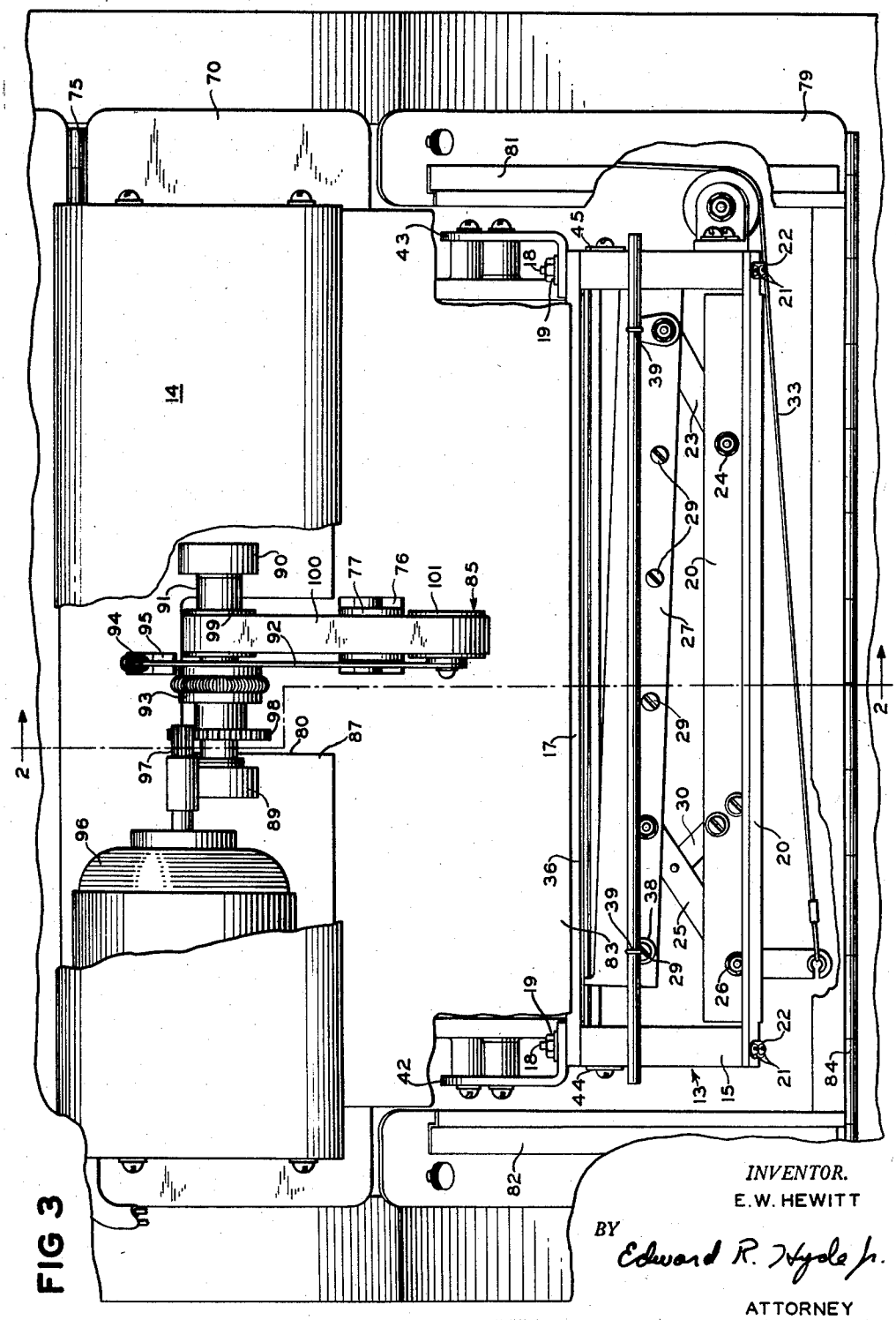

FIG 3

INVENTOR.
E. W. HEWITT
BY Edward R. Hyde Jr.
ATTORNEY

MESSAGE CUTTER AND CONVEYOR

Filed Feb. 19, 1954 5 Sheets-Sheet 4

FIG 4

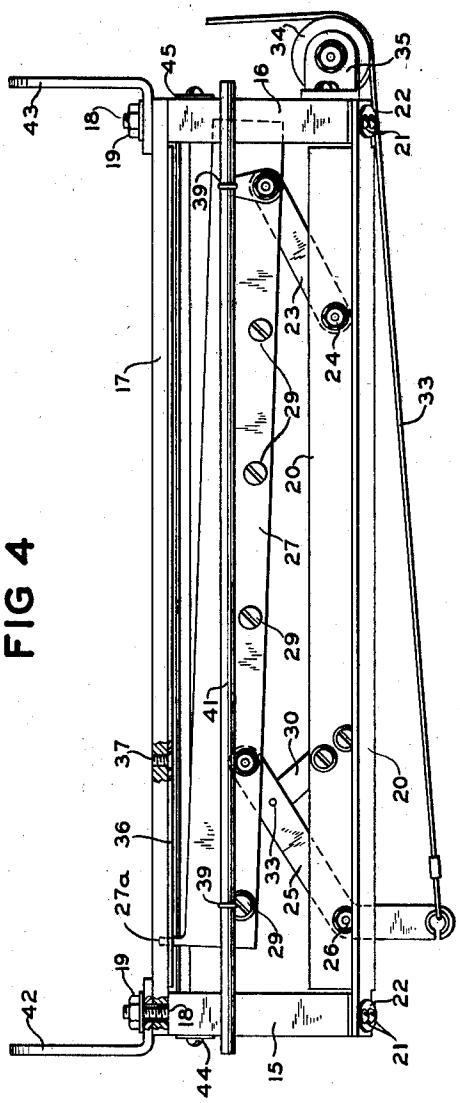

FIG 5

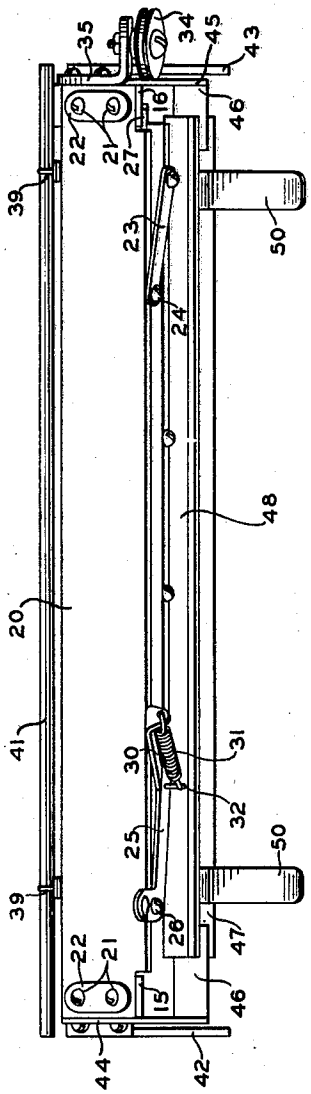

FIG 6

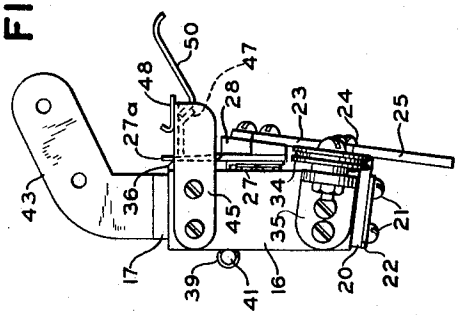

INVENTOR.
E. W. HEWITT
BY Edward R. Hyde Jr.
ATTORNEY

MESSAGE CUTTER AND CONVEYOR

Filed Feb. 19, 1954 5 Sheets-Sheet 5

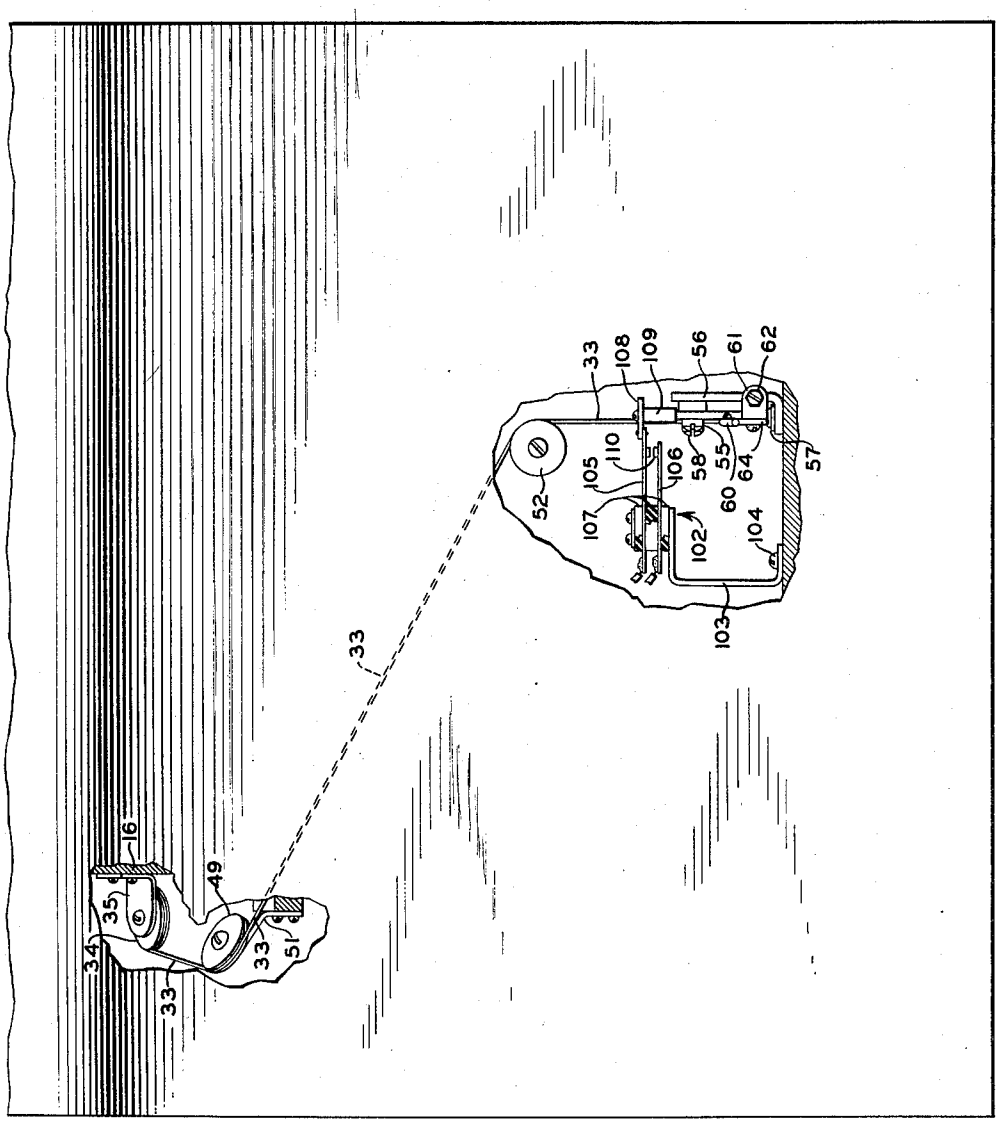

FIG 7

INVENTOR.
E. W. HEWITT
BY Edward R. Hyde Jr.
ATTORNEY

United States Patent Office

2,935,563

Patented May 3, 1960

1

2,935,563

MESSAGE CUTTER AND CONVEYOR

Ernest W. Hewitt, Stamford, Conn., assignor to The Western Union Telegraph Company, New York, N.Y., a corporation of New York

Application February 19, 1954, Serial No. 411,456

6 Claims. (Cl. 178—42)

This invention relates to printing telegraph apparatus and more particularly to an automatic message cutter and conveyor mechanism particularly adapted for use with a teleprinter.

One type of teleprinter in general use at the present time provides for the printing of received messages in successive lines on a continuous roll of message paper. The paper is fed in a step-by-step manner past a printing point, the feed being controlled by signals from the distant transmitter. At the end of each line of the message a line feed signal is transmitted to effect a stepping of the continuous roll of message paper. At the end of the message a series of line feed signals may be transmitted to step the recorded message clear of the printing mechanism. This may be followed by an end-of-message signal to indicate that the particular message has been sent. An attendant at the receiving station noting the signal, manually tears the message from the continuous roll and routes it to its proper destination. Such a system presents the disadvantage of necessitating the supervision of an attendant to sever the messages as they are received to prevent undue accumulation of recorded messages at the printer. Further, manual severing results in a delay in routing the messages to their proper destination.

It is therefore a primary object of this invention to provide a message cutter especially adapted for use with a telegraph printer to cut recorded messages from a continuous roll of message paper.

A further object is to provide a conveying mechanism that cooperates with a message cutter to convey recorded messages as they are severed from the supply roll.

Another object is to provide a message cutter and conveyor which operate automatically under the control of signals received from a distant or local transmitter.

Accordingly, there is provided a cutting mechanism conveniently adapted to be mounted on a conventional teleprinter. The cutter includes a movable blade which is so located that upon actuation thereof recorded messages are cut from the continuous roll of paper. Also, a conveying mechanism is provided to be mounted upon the teleprinter in such a location that the cut message is conveyed to the rear of the printer to a convenient receptacle or other means for convenient routing. A more thorough understanding of the present invention will be obtained from the following specification taken in connection with the following drawings in which:

Fig. 1 is a perspective view of a teleprinter with the cutter and conveying mechanism of the present invention mounted thereon;

Fig. 2 is a side view of Fig. 1 with certain parts of the printer cover broken away to show the cutter, conveyor and operating means therefor;

Fig. 3 is a plan view of Fig. 2 with part of the conveyor cover broken away to show details of the conveyor mechanism;

Fig. 4 is a top view of the cutter mechanism;

Fig. 5 is a front view of Fig. 4;

Fig. 6 is an end view of Fig. 4;

2

Fig. 7 is a rear view of a portion of the printer with parts of the cover broken away to show the cutter cable and conveyor switch; and

Fig. 8 is a schematic diagram of the conveyor control circuit.

The present invention will be described with reference to a conventional teleprinter such as shown, for example, in Patent No. 1,904,164 to Morton et al., and only so much of the teleprinter will be shown and described herein as is necessary for a proper understanding of the present invention. Referring now to Figs. 1 and 2, there is shown a teleprinter of the type of the above cited patent including a continuous paper roll **10** which passes over tension bar **11**, around platen **12**, past the printing mechanism (not shown) and through an opening in the upper part of the cover. The cutting mechanism of the present invention generally indicated by numeral **13** is conveniently secured to the printer at a point just above the platen **12**. Conveying mechanism **14** is mounted on top of the printer for the purpose of conveying cut messages to the rear thereof as will become apparent hereinafter.

Cutter assembly **13**, shown in detail in Figs. 4, 5 and 6, comprises end plates **15** and **16** secured to stationary blade mounting plate **17** by means of studs **18** and nuts **19**. A front angle bracket **20** is fastened to the opposite ends of the end plates by means of screws **21** passing through clamping plates **22** and angle bracket **20**, and received in holes in the end plates. A lever **23** and an operating lever **25** are pivoted at **24** and **26**, respectively, to angle bracket **20**. A movable blade **27** is also pivoted to lever **23** and to operating lever **25**. A movable blade stiffener **28** is secured to the underside of the movable blade by means of screws **29** to lend rigidity to the blade. Also secured to angle bracket **20** is a stop lug **30** which limits the movement of operating lever **25** in a clockwise direction. Stop lug **30** has a bent-over portion to which is secured one end of a cutter spring **31**, the other end being fastened to pin **32** secured to operating lever **25**. The cutter spring serves to continually urge the movable blade to its retracted position. In this position, as seen in Fig. 4, the cutting edge of movable blade **27** is disposed at an angle to stationary blade **36** as a result of the unequal lengths of levers **23** and **25**. This is an especially important feature inasmuch as it provides a sharply defined cutting point during the cutting operation. As blade **27** moves forward, the message paper is cut from left to right requiring a minimum amount of cutting force because of the low friction cutting point. A cable **33** is secured to one end of the operating lever and passes around pulley **34** which is mounted on pulley mounting bracket **35** secured to plate **16**. A stationary blade **36** is secured to the inner face of the stationary blade mounting plate **17** by means of screws **37**. Two lugs **38** (Fig. 2) are fastened to the upper face of the movable blade by screws **29** and serve to fasten one end of springs **39**, the opposite ends of which are received by a spring holder **41**. The spring holder is in the form of a rod which rests on the upper surfaces of the end plates **15** and **16** and is free to move laterally. It is seen that the springs **39** and spring holder **41** serve to urge the movable blade into firm contact with the fixed blade during the cutting operation. As blade **27** is reciprocated, rod **41** will slide laterally on end plates **15** and **16**, to permit the anchor points of the springs **39** to follow the blade. It is seen therefore that the springs maintain a constant pressure on the blade to aid in a clean, complete and efficient severing of the paper. The movable blade **27** has a projection **27*a*** at the left end thereof which engages the fixed blade when the movable one is in its retracted position thereby preventing the movable blade from being displaced upwardly. It is seen from the description so far that a cutting operation is effected by a pull on cable **33**. End

brackets 42 and 43 are secured to the cutting assembly by means of the studs 18 and serve to mount the assembly on the side frames of the teleprinter in the position shown in Fig. 2.

To insure the proper feed of the paper from the printing position up along the inner face of the stationary blade 36, a message guide assembly is provided comprising end members 44 and 45 secured to the outer faces of end plates 15 and 16. The end members are preferably made of sheet metal material and have bentover portions 46 to which members 47 and 48 are secured by any suitable means, such as spot welding. These members 47 and 48 are secured to opposite faces of the bentover portions 46 thereby providing a space through which the message paper is fed. The paper is further guided by paper guides 50 which may also be secured by spot welding to member 48. The message guide insures that the paper is fed up past the inner surface of the fixed blade where it may be readily cut by actuation of the movable blade.

The cable 33 passes around pulley 49, as seen in Figs. 2 and 7, mounted on pulley bracket 51 which is secured to the right side frame of the machine. A third pulley 52 is mounted on a pulley post 53 as shown in Figs. 2 and 7. The cable passes around this pulley 52 and is secured to a pulley lever 54 which is pivotally mounted at 55 to a cable lever mounting bracket 56. The mounting bracket is secured to the base of the teleprinter by screws 57. The cable lever has an upper horizontal arm which receives a screw and nut assembly 58 around which the cable is fed before passing through a hole in clamping screw 59. A member 60 is fastened to the end of the cable to provide a convenient means to grip the cable in adjusting the tension thereof. In making this adjustment, clamping screw 59 is first loosened, the cable is properly tensioned and then clamped by screw 59. A lower horizontal arm of the cable lever has a bentover lug 61 which receives adjusting screw 62 and lock nut 63. The location of adjusting screw 62 is such as to abut against the upstanding portion of the mounting bracket 56 substantially as shown. In this manner the angular position of the cable lever may be readily adjusted by screws 62. It is seen from the above description that a clockwise turning of the cable lever 54 will effect the cutting operation of the cutter assembly 13. This is effected by means of a push bar 64 which is selectively caused to move to the left, as shown in Fig. 2, thereby causing cutting. The push bar is controlled by the usual function lever arrangement well known in this type of machine and described in the aforementioned patent to Morton.

This arrangement includes function lever 65 pivotally mounted to function lever shaft 66 secured to the side frame members of the machine. The function lever spring 67 is fastened at one end to the upstanding arm of the function lever and anchored at the other end to the machine. This spring continually urges the function lever to turn in a clockwise direction. The upper arm of the function lever 65 is bifurcated and has code notches cut in the outer edge of one of the arms in the usual manner. Selector vanes 68 controlled by the received pulses from the transmitter assume selected positions. With each cycle, the function lever is released to rotated in a clockwise direction to permit the function lever notches to engage vanes 68. If a cutting signal has been received, which in the illustration corresponds to the upper case blank signal, the selector vanes will assume positions whereby they will mesh with the notches of the function lever to permit clockwise rotation thereof. The lower arm of the function lever is also bifurcated and receives one end of push bar 64 which has a notch 69 in the upper edge thereof. The function bail 71 supports a function bail blade 72 which is adapted to engage notch 69 as the function bail moves to the left with each cycle in the well known manner. It is seen therefore that if a cutting signal is received in a particular cycle, the push bar 64 is moved to the left to turn cable lever 64 in a clockwise direction to effect the cutting operation.

The message paper after passing up through the cutting assembly is guided by a mounting plate 73 secured to a cover plate 70 which in turn is hinged to the cover by means of hinge 75. The mounting plate has a rectangular opening 76 cut therein through which an idler roller 77 protrudes. The message paper is directed along the surface of the mounting plate and over the roller by a front cover assembly 78 comprising a U-shaped frame 79 and brackets 81 and 82 which secure a transparent plate 83. This cover assembly is pivoted to the teleprinter cover by hinge 84. The transparent cover 83 makes it possible to view the operation of the cutter assembly and the printing of message characters on the paper. With the cover assembly in place, as shown in Fig. 2, a small space exists between the upper surface of plate 73 and the transparent cover 83 through which the message paper may pass. Immediately subsequent to a cutting operation, a conveyor assembly 85 is caused to pivot down to its dotted line position at which point it cooperates with the idler roller 77 to convey the cut message to the rear of the teleprinter where it may be received by a receptacle or other device for further routing to its proper destination.

The operation of the conveyor assembly 85 will now be described in detail with reference to Figs. 2 and 3. Mounting plate 73 has two upstanding arms 74 which may be integral with the plate and which have bent-over upper edges to support a base plate 87 by means of screws 88. The base plate 87 has a cut out portion 80 to permit the pivoting movement of the conveyor assembly. Bearing posts 89 and 90 are secured to the base plate on either side of the cut-out portion 80 and support shaft 91. A pulley arm 92 is loosely mounted on the shaft 91 and secured to a friction clutch 93 of conventional construction. The inner end of the pulley arm is fastened to one end of spring 94, the other end of which is secured to a stop lug 95 which in turn is fastened to the base plate 87. It is readily seen that the spring 94 will tend to urge pulley assembly 85 in a counter-clockwise direction to a point where the rearward projection of pulley arm 92 engages stop lug 95. Rotation is imparted to the shaft 91 by means of a motor 96 mounted on the base plate, a pinion 97 mounted on the motor shaft and a gear 98 secured to the shaft 91. A pulley 99 is fastened to shaft 91 and supports belt 100 which goes around pulley 101 pivoted at the end of the pulley arm. Upon energization of motor 96, the pulley arm will pivot in the clockwise direction to its dotted line position whereupon further rotation of the assembly is arrested. Shaft 91 continues to rotate and in turn causes belt 100 to cooperate with idler roller 77 to convey the cut message to the rear of the teleprinter.

Motor 96 is controlled by a switch 102 more clearly shown in Fig. 7. Contact bracket 103 is fastened to the teleprinter base by means of screw 104. Fastened to the upper arm of bracket 103 are contact arms 105, 106 suitably insulated by means of insulators 107. Upper contact arm 105 has an insulated extension 108 to which is secured a stud 109 cooperating with cable lever 54. With the cable lever in its normal position, stud 109 is held raised thereby maintaining contacts 110 separated. Upon actuation of the cable lever, stud 109 is permitted to descend to close the contacts 110.

The circuit controlled by this switch is shown in Fig. 8. Motor 96 is in series with a source of power and the normally open contacts B of relay 109. Also connected to a conventional 110-volt, 60 cycle A.C. source is resistor 110′, rectifier 111, contacts A of relay 109 and capacitor 112. Rectifier 111 provides a D.C. voltage which maintains capacitor 112 in a normally charged condition. The coil of relay 109 in series with switch 102 and a resistor 113 is connected across capacitor 112. With the switch 102 in its normally open position, the relay is maintained deenergized and its A contact is in

the right hand position to maintain capacitor **112** energized. Upon closing of switch **102** as a result of a received cutting signal, a circuit is completed through relay **109**. The energization of this relay closes its B contact to energize motor **96**. The A contact will assume the left hand position to lock-up relay **109**. The relay will stay in this condition until the charge on capacitor **112** decreases to a predetermined value. The time constant of capacitor **112** and resistor **113** will determine the period of time that the relay is energized and hence the period that motor **96** operates the conveyor assembly.

After a message has been cut, the printer is in condition to receive the next succeeding message which is recorded in lines across the message paper. At the end of each line, a line feed signal is received to cause a stepping of the message paper for recording of the next line. It should be pointed out that a predetermined number of these line feed operations must occur between successive cutting and conveying operations to insure that the leading edge of the paper has reached roller **77**. Otherwise, the cut message will not be gripped between the roller and belt **100**. Hence, if a short message of an insufficient number of lines is transmitted, it must be followed by a series of line feed signals before a cutting signal is transmitted.

To briefly summarize the operation of the instant invention, a cutting signal of a predetermined combination of impulses such as that representing upper case blank is received to set rockable selector vanes **68** in the position where they mesh with the notches of function lever **65** to permit clockwise rotation thereof. Push bar **64** is thereby raised and pushed to the left by function bail blade **72** to rock cable lever **54** thereby causing the recorded message to be severed from the roll of message paper. The rocking of the cable lever also closes switch **102** to energize conveyor motor **96** and cause conveyor assembly **85** to pivot to grip the severed message between roller **77** and belt **100**.

It is understood that the term cable as used throughout the specification and claims is meant to include a wire, rope, chain or other strand-like element.

The present invention has been disclosed with reference to a specific embodiment thereof and it is understood that various modifications and substitutions of equivalents may be made without departing from the scope of the invention as defined in the appended claims.

What is claimed is:

1. A telegraph printer comprising a framework, means to mount a roll of message paper on said framework, means to feed said message paper past a recording point where message characters may be recorded thereon, a plurality of settable means responsive to combinations of received impulses to control the recording of said message characters, pivotally mounted function means controlled by said settable means, cutter means mounted on said framework in the line of feed of said message paper and selectively operable to cut off recorded message sheets, conveyor means associated with said telegraph printer for conveying said sheets, lever means controlled by said function means, cable means secured to said lever means to operate the cutter means, and switch means controlled by said lever means to effect operation of said conveyor means.

2. A telegraph printer comprising a framework, means to mount a roll of message paper on said framework, means to feed said message paper past a recording point where message characters may be recorded thereon, a plurality of selector vanes responsive to combinations of received impulses to control the recording of said message characters, a pivotally mounted function lever controlled by said selector vanes, cutter means mounted on said framework in the line of feed of said message paper and selectively operable to cut off recorded message sheets, conveyor means located past said cutter means along the path of paper feed for conveying said sheets, lever means controlled by said function lever, cable means secured to said lever means and to said cutter means, circuit means connected to control said conveyor means, and switch means controlled by said lever means to control said circuit means to selectively operate said conveyor.

3. A telegraph printer comprising a stationary frame, means to mount a roll of message paper on said frame, means to feed said message paper past a recording point where message characters are recorded thereon, means whereby said characters are selected as a result of combinations of received impulses, means to cut said recorded messages, conveyor mechanism comprising rotatable means normally located out of the path of said message paper, means to shift said rotatable means into the path of said message paper and means responsive to a received signal to actuate said cutting means and said means to shift said rotatable means.

4. A telegraph printer comprising a stationary frame, means to mount a roll of message paper on said frame, means to feed said message paper past a recording point where message characters are recorded thereon, means whereby said characters are selected as a result of combinations of received impulses, means to cut said recorded messages, conveyor means located adjacent the path of said message paper, means to guide the message paper past said conveying means, means to shift said conveying means into the path of the message paper and means to actuate said cutting means, said conveyor means and said shifting means, said means to actuate being selectively controlled by a combination of received impulses.

5. A telegraph printer comprising a stationary frame, means to mount a roll of message paper on said frame, means to feed said message paper past a recording point where message characters are recorded thereon, means whereby said characters are selected as a result of combinations of received impulses, means to cut said recorded messages, conveyor means located adjacent the path of said message paper and adapted to convey cut messages, said conveyor means comprising a rotatable shaft, clutch means mounted on the shaft, support means associated with the clutch means and adapted to be pivoted thereby, a pulley rotatably mounted at one end of said support means, another pulley secured to said shaft to be rotated thereby, a belt supported by said pulleys, means to rotate said shaft and means responsive to received impulses to actuate said cutting means and to energize said means to rotate.

6. A telegraph printer comprising a framework, means to mount a roll of message paper on said framework, means to feed said message paper past a recording point where message characters may be recorded thereon in lines across the paper and wherein the paper is stepped at the end of each line by a combination of impulses received from a distant transmitter, a plurality of settable means responsive to combinations of received impulses to control the recording of said message characters, pivotally mounted function means controlled by said settable means, cutter means mounted on said framework in the line of feed of said message paper and adapted to cut off recorded messages, said cutter means including a frame, a stationary blade secured to said frame, a movable blade mounted on said frame to cooperate with the stationary blade to effect a cutting operation, spring means to maintain the movable blade in firm engagement with the stationary blade and means normally engaging the stationary blade to prevent displacement of the movable blade when in the retracted position, conveyor means located adjacent the path of said message paper, means to guide the paper past said conveying means, means to shift the conveying means into the path of said message paper, and means controlled by said function means as a result of a predetermined combination of received impulses to actuate said cutter means, said conveyor means and said means to shift said conveying means.

(References on following page)

References Cited in the file of this patent

UNITED STATES PATENTS

128,194	Westerhauser	June 18, 1872
1,009,028	Brown et al.	Nov. 14, 1911
1,580,054	Laencher	Apr. 6, 1926
1,904,164	Morton et al.	Apr. 18, 1933
2,026,402	Schlemmer	Dec. 31, 1935
2,182,871	Jones et al.	Dec. 12, 1939
2,273,081	Zenner	Feb. 17, 1942
2,276,991	Long et al.	Mar. 17, 1942
2,360,637	Anspach et al.	Oct. 17, 1944
2,395,352	Staude et al.	Feb. 19, 1946
2,481,934	Langston	Sept. 13, 1949
2,761,503	Krueger	Sept. 4, 1956

FOREIGN PATENTS

678,411	Great Britain	Sept. 3, 1952