(12) INTERNATIONAL APPLICATION PUBLISHED UNDER THE PATENT COOPERATION TREATY (PCT)

(19) World Intellectual Property Organization
International Bureau

(43) International Publication Date
6 October 2016 (06.10.2016)

WIPO | PCT

(10) International Publication Number
WO 2016/156611 A1

(51) International Patent Classification:
G02B 6/44 (2006.01)

(21) International Application Number:
PCT/EP2016/057294

(22) International Filing Date:
3 April 2016 (03.04.2016)

(25) Filing Language: English

(26) Publication Language: English

(30) Priority Data:
62/142,903 3 April 2015 (03.04.2015) US

(71) Applicant: **COMMSCOPE CONNECTIVITY BELGIUM BVBA** [BE/BE]; Diestsesteenweg 692, B-3010 Kessel-Lo (BE).

(72) Inventors: **GEENS, Johan**; Walmersumstraat 32, 3380 Bunsbeek (BE). **VERMEULEN, Pieter**; Guido Gezellestraat 3, 2260 Westerlo (BE). **KEUSTERMANS, Eric Marcel M.**; Haldertstraat 5, 3390 Houwaart (BE). **VASTMANS, Kristof**; Willebringsestraat 14, 3370 Boutersem (BE).

(74) Agent: **KEANE, David**; Murgitroyd & Company, Scotland House, 165-169 Scotland Street, Glasgow Strathclyde G5 8PL (GB).

(81) Designated States *(unless otherwise indicated, for every kind of national protection available)*: AE, AG, AL, AM, AO, AT, AU, AZ, BA, BB, BG, BH, BN, BR, BW, BY, BZ, CA, CH, CL, CN, CO, CR, CU, CZ, DE, DK, DM, DO, DZ, EC, EE, EG, ES, FI, GB, GD, GE, GH, GM, GT, HN, HR, HU, ID, IL, IN, IR, IS, JP, KE, KG, KN, KP, KR, KZ, LA, LC, LK, LR, LS, LU, LY, MA, MD, ME, MG, MK, MN, MW, MX, MY, MZ, NA, NG, NI, NO, NZ, OM, PA, PE, PG, PH, PL, PT, QA, RO, RS, RU, RW, SA, SC, SD, SE, SG, SK, SL, SM, ST, SV, SY, TH, TJ, TM, TN, TR, TT, TZ, UA, UG, US, UZ, VC, VN, ZA, ZM, ZW.

(84) Designated States *(unless otherwise indicated, for every kind of regional protection available)*: ARIPO (BW, GH, GM, KE, LR, LS, MW, MZ, NA, RW, SD, SL, ST, SZ, TZ, UG, ZM, ZW), Eurasian (AM, AZ, BY, KG, KZ, RU, TJ, TM), European (AL, AT, BE, BG, CH, CY, CZ, DE, DK, EE, ES, FI, FR, GB, GR, HR, HU, IE, IS, IT, LT, LU, LV, MC, MK, MT, NL, NO, PL, PT, RO, RS, SE, SI, SK, SM, TR), OAPI (BF, BJ, CF, CG, CI, CM, GA, GN, GQ, GW, KM, ML, MR, NE, SN, TD, TG).

Published:

— *with international search report (Art. 21(3))*

(54) Title: TELECOMMUNICATIONS DISTRIBUTION ELEMENTS

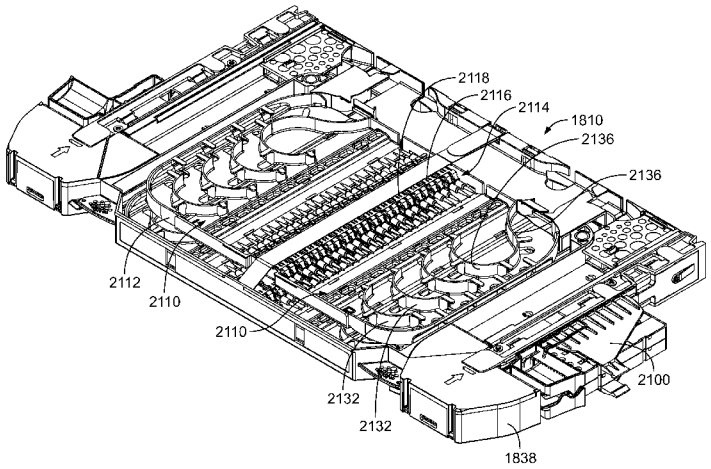

FIG. 98A

(57) Abstract: An optical fiber distribution element (1810) includes a chassis (1820), an optical device (1900) mounted to the chassis (1820), the optical device (1900) including a plurality of cables (2134) extending from the optical device (1900) into the chassis (1820), and a cable management device (2110/2210) mounted to the chassis (1820). The cable management device (2110/2210) includes a plurality of radius limiters in the form of spools (2132/2232) in a stacked arrangement for managing the cables (2134) extending from the optical device (1900) for further connection within the chassis (1820), wherein a first of the spools (2132/2232) defines a spool wall (2136/2236) having a different wall length than that of a second of the spools (2132/2232), wherein a first of the plurality of cables (2134) is routed around the first of the spools (2132/2232) and a second of the plurality of cables (2134) is routed around the second of the spools (2132/2232) that has a different spool wall length than that of the first of the spools (2132/2232).

WO 2016/156611 A1

TELECOMMUNICATIONS DISTRIBUTION ELEMENTS

Cross Reference to Related Application

This application claims the benefit of U.S. Patent Application Serial No. 62/142,903, filed on April 3, 2015, the disclosure of which is incorporated herein by reference in its entirety.

Field of the Invention

The present invention relates to telecommunications distribution systems, e.g., optical fiber distribution systems, which may include a rack and elements which populate the rack, wherein such fiber optic elements can include fiber terminations, patching, fiber splitters, and fiber splices. More specifically, the present invention relates to a mounting system for fixedly stacking two or more such telecommunications distribution elements along a vertical column or stack.

Background of the Invention

Optical fiber distribution systems may include fiber terminations and other equipment which is typically rack mounted. Various concerns exist for the optical fiber distribution systems, including density, ease of use and mounting, and cable management. There is a continuing need for improvements in the telecommunications distribution area, especially optical fiber distribution area.

Summary of the Invention

One implementation of a system in accordance with the examples of the disclosure includes a building block element mountable to a rack or other structure. The element includes a chassis, and a moveable tray. The tray is moveably mounted to chassis with a slide mechanism that allows the tray to slide relative to the chassis, wherein the tray may house equipment for fiber terminations, patching, splitting, and splicing.

The elements can be stacked in a column with each tray slidable in a horizontal direction. In the case of a column of elements, a selected tray is pulled outward to access the desired tray.

In an example embodiment of a fiber optic distribution element, one side of each element can be for patch cables, and the opposite side can be for cable termination of an incoming cable, such as a distribution cable or a feeder cable. The elements can be configured as desired and form building blocks for an optical fiber distribution system (ODF). When the elements are mounted in a column in a rack, the cables can be placed in vertical cable guides to enter and exit the selected element. An example rack may be front accessible. However, the elements shown and described can be used in other racks, frames, cabinets or boxes including in arrangements where rear access is desirable or useful.

According to an aspect of the disclosure, the disclosure is directed to a mounting system for fixedly stacking two or more such telecommunications elements along a vertical column or stack, wherein the stacked elements can then be mounted on further fixtures such as racks, frames, cabinets or boxes.

According to another aspect, the present disclosure relates to a mounting system for locking two pieces of telecommunications equipment so as to prevent relative sliding between the two pieces of telecommunications equipment and relative separation between the two pieces of telecommunications equipment that is in a direction generally perpendicular to the direction of the relative sliding. The mounting system includes a first locking feature in the form of a stud defining a stem portion and a flange portion having a larger profile than the stem portion, a second locking feature in the form of a slot defining a receiver portion and a retention portion, wherein the receiver portion is sized to accommodate the flange portion of the stud and the retention portion is sized to accommodate the stem portion but not the flange portion of the stud, and a third locking feature configured to prevent relative sliding between the two pieces of telecommunications equipment once the stem portion of the stud has been slid through the retention portion of the slot and the flange portion is out of alignment with the receiver portion of the slot. According to one example embodiment, the third locking feature may be provided in the form of a removable, snap-fit structure.

According to another example embodiment, the third locking feature may be provided in the form of a cantilever arm that is an integral part of the telecommunications equipment, the cantilever arm having a portion that abuts the stud for preventing sliding movement of the stud.

According to another aspect, the disclosure is directed to a telecommunications distribution element that includes a mounting system that allows the distribution element to be fixedly stacked along a vertical column or stack with another similarly configured element.

According to another aspect, the disclosure is directed to an optical fiber distribution element comprising a top surface, a bottom surface, an interior region defined between the top surface and the bottom surface, the interior region including fiber optic connection locations, a first locking feature in the form of a stud extending from the top surface, the stud defining a stem portion and a flange portion having a larger profile than the stem portion, and a second locking feature in the form of a slot at the bottom surface, the slot defining a receiver portion and a retention portion, wherein the receiver portion is sized to accommodate the flange portion of the stud and the retention portion is sized to accommodate the stem portion but not the flange portion of the stud.

According to another aspect of the disclosure, the disclosure is directed to a method of stacking two or more distribution elements along a vertical column.

According to another aspect, the disclosure is directed to a method of locking two pieces of telecommunications equipment so as to prevent relative sliding between the two pieces of telecommunications equipment and relative separation between the two pieces of telecommunications equipment that is in a direction generally perpendicular to the direction of the relative sliding. The method includes aligning a flange portion of a stud of a first piece of telecommunications equipment with a receiver portion of a slot of a second piece of telecommunications equipment, passing the flange portion of the stud through the receiver portion of the slot, sliding a stem portion of the stud through a retention portion of the slot to bring the flange portion out of alignment with the receiver portion of the slot, and providing a lock that prevents relative sliding

between the first and second pieces of telecommunications equipment so as to prevent sliding of the stem portion of the stud through the retention portion of the slot.

According to another aspect, the disclosure is directed to an optical fiber distribution element comprising a chassis, an optical device mounted to the chassis, the optical device including a plurality of cables extending from the optical device into the chassis, and a cable management device mounted to the chassis. The cable management device includes a plurality of radius limiters in the form of spools in a stacked arrangement for managing the cables extending from the optical device for further connection within the chassis, wherein a first of the spools defines a spool wall having a different wall length than that of a second of the spools, wherein a first of the plurality of cables is routed around the first of the spools and a second of the plurality of cables is routed around the second of the spools that has a different spool wall length than that of the first of the spools.

According to another aspect, the disclosure is directed to an optical fiber distribution element comprising a chassis, a tray slidably mounted to the chassis, the tray movable between a closed position and an open position, an optical device mounted to the chassis, the optical device including a plurality of cables extending from the optical device into the tray of the chassis, a first cable management device mounted within the tray, the cable management device including a plurality of radius limiters in the form of spools in a stacked arrangement for managing the cables extending from the optical device for further connection within the tray, wherein a first of the spools defines a spool wall having a different wall length than that of a second of the spools, wherein a first of the plurality of cables is routed around the first of the spools and a second of the plurality of cables is routed around the second of the spools that has a different spool wall length than that of the first of the spools, and a second cable management device for guiding the cables from the optical device to the first cable management device, wherein the second cable management device is configured to move in synchronized movement relative to both the chassis and the tray to maintain fiber slack.

According to another aspect, the disclosure is directed to a cable management device for managing a plurality of cables extending between two connection points on a

fiber optic chassis, the cable management device comprising a plurality of radius limiters defined by spools arranged in a stacked arrangement, each spool including a wall defining a wall length that extends between a first end and a second opposite end of the cable management device, wherein a first of the spools defines a spool wall length that is different than that of a second of the spools.

According to yet another aspect, the disclosure is directed to a method of managing a plurality of the same length cables extending from an optical device toward connection locations within a telecommunications fixture on which the optical device is mounted, the method comprising routing at least two of the cables around two different radius limiters that are defined by spools provided in a stacked arrangement, each spool of the two defining a spool wall having a different wall length than the other for defining a different length cable path from the optical device to the connection locations.

Brief Description of the Figures

Figure 1 is an embodiment of an optical fiber distribution element in accordance with the present disclosure;

Figure 2 is a top view of the element of Figure 1;

Figure 3 is a perspective view of the element of Figure 1 showing the tray pulled forward from the chassis;

Figure 4 shows one of tray frame members pivoted upwardly from the tray;

Figure 5 shows a second frame member pivoted upwardly relative to the tray;

Figure 6 shows a portion of a cable management area of the element of Figure 1;

Figure 7 shows a similar view to Figure 6, with one of the frame members pivoted upwardly;

Figure 8 shows an alternative embodiment of an element with different cable management at the entry points;

Figure 9 shows three of the elements of Figure 8 mounted in a block formation, with cable radius limiters at the entry point mounted in an alternative position;

Figure 10 is a perspective view of the block of Figure 9;

Figure 11 is a view of the block of Figure 9, with the tray of the middle element pulled forward for access to the fiber terminations;

Figure 12 shows an enlarged portion of an entry point for one of the elements with a cable radius limiter in a first position;

Figure 13 shows a similar view as in Figure 12, with the cable radius limiter positioned in an alternate position;

Figure 14 shows an exploded view of a cable mount;

Figure 15 shows an element with a cable mount on one side, and a cable radius limiter on an opposite side;

Figure 16 shows an alternative cable mount;

Figures 17-29 show various views of the elements shown in Figures 1-16 including additional details and cable routings shown for illustration purposes;

Figure 30 shows an alternative embodiment of a block of two alternative elements;

Figure 31 shows a tray pulled forward from the chassis of one of the elements of the block of Figure 30;

Figure 32 shows the tray extended forward as in the view of Figure 31, with one of the frame members pivoted upwardly;

Figure 33 is a view similar to the view of Figure 32, with a second frame member pivoted upwardly;

Figure 34 shows a block including two elements;

Figure 35 shows an exploded view of the two elements of the block of Figure 34;

Figure 36 shows a single element;

Figure 37 shows an exploded view of the element of Figure 36;

Figure 38 shows the element of Figure 37, without the top cover;

Figure 39 is a top view of the element of Figure 38;

Figure 40 is an alternative view of the element of Figure 38, showing alternative devices at the cable entry points;

Figure 41 is a top view of the element of Figure 40;

Figure 42 shows an alternative embodiment of an element in a top view with an alternative synchronized movement feature;

Figure 43 is a perspective view of the element of Figure 42;

Figures 44 and 45 show movement of the various components of the synchronized movement feature of Figures 42 and 43;

Figures 46 and 47 show an element with an alternative radius limiter at the cable entry and exit locations;

Figure 48 shows a cross-sectional view of a portion of a universal mounting mechanism configured for mounting an optical fiber distribution element similar to those shown in Figures 30-47 of the present disclosure to a telecommunications rack, the mounting mechanism shown in a locked position;

Figure 49 illustrates the universal mounting mechanism of Figure 48 in an unlocked position;

Figure 50 illustrates a partially exploded perspective view of a portion of the universal mounting mechanism of Figures 48-49 being used on an optical fiber distribution element similar to the elements shown in Figures 30-47;

Figure 51 illustrates the universal mounting mechanism of Figure 50 with the universal mounting brackets of the mechanism mounted to the element of Figure 50;

Figure 51A is a close-up view of a portion of the universal mounting mechanism of Figure 51, illustrating the locking spring in a locked position with respect to the universal mounting bracket;

Figure 52 is a cross-sectional view of a portion of the universal mounting mechanism of Figure 48 showing the positional relationship between the universal mounting bracket and the release handle of the mounting mechanism when the mounting mechanism is in a locked state;

Figure 53 shows a pair of elements in a stacked configuration, the elements shown with another alternative radius limiter on the slide mechanism;

Figure 54 is a top view of one of the elements of Figure 50 illustrating the alternative radius limiter;

Figures 55-59 illustrate the steps for stacking two telecommunications distribution elements in a vertical stack or column using the mounting system of the present disclosure;

Figure 60 is a bottom perspective view of one of the telecommunications distribution elements of Figures 55-59, illustrating the slots of the mounting system;

Figure 61 is a bottom plan view of the telecommunications distribution element of Figure 60;

Figures 62-63 illustrate the steps for stacking two telecommunications distribution elements in a vertical stack or column using another embodiment of a mounting system according to the present disclosure;

Figure 64 is a cross-section taken along line 64-64 of Figure 63;

Figure 65 illustrates a portion of the cross-section of Figure 64 from a direct side-view;

Figure 66 illustrates the element of Figures 62-65 with the tray at an extended position, the element including pivotable covers over the U-shaped radius limiter and the S-shaped cable pathway within the element, the covers shown in an open configuration;

Figure 67 illustrates the element of Figure 66 with the covers in a pivotally closed position;

Figures 68-79 illustrate various embodiments of hingedly-mountable frame members that may be used within the trays of the element of Figures 62-67;

Figure 80 illustrates another element having features similar to the element of Figures 62-67; the element of Figure 80 defining at least one opening at a front face thereof for allowing a user to see the type of frame member that is being housed within the element;

Figures 81-82 illustrate the element of Figure 80 with a piece of telecommunications equipment in the form of a fiber optic splitter mounted to an exterior of the tray of the element;

Figure 83 illustrates another version of a latch for latching the tray of an element to the cover of the element in a closed position, the latch shown as being used on the element of Figures 80-82;

Figure 83A is a close-up view of a portion of the latch of Figure 83;

Figures 84-85 illustrate a vertical cable mount that is configured for use with the element of Figures 80-82;

Figure 86A illustrates an exploded view of a horizontal cable fixation device that may be mounted to the sidewalls of the element of Figures 80-82;

Figure 86B illustrates the cable fixation device of Figure 86A in an assembled configuration;

Figure 86C illustrates the cable fixation device of Figure 86A mounted to the element of Figures 80-82;

Figure 87A illustrates an exploded view of another horizontal cable fixation device similar to that shown in Figure 86A that may be mounted to the sidewalls of the element of Figures 80-82;

Figure 87B illustrates the cable fixation device of Figure 87A in an assembled configuration;

Figure 87C illustrates the cable fixation device of Figure 86A mounted to the element of Figures 80-82;

Figures 88A-88C illustrate the horizontal cable fixation device of Figures 87A-87C used with a cable wrap similar to the cable wrap shown in Figure 16;

Figure 89 illustrates another version of a latch for keeping the tray of an element in the closed position, the latch shown as being used on an element similar to that of Figures 80-82, the tray shown in a closed position;

Figure 90 illustrates the tray of Figure 89 being moved from the closed position to an open position;

Figure 91 illustrates a close up view of the tray of Figure 89 showing the additional openings on the tray used for securing the tray in a closed position;

Figure 92 illustrates a stack of elements similar to those shown in Figures 80-82 and 89-91, wherein the U-shaped radius limiters of the elements include openings allowing a user to see portions of a universal mounting mechanism such as that of Figures 48-52 if the elements are equipped with such a mounting mechanism;

Figure 93 illustrates a close-up view of the front face of a U-shaped radius limiter showing the opening;

Figure 94 illustrates an element similar to those shown in Figures 80-82 utilizing a mounting bracket for mounting a piece of telecommunications equipment, in the form of a fiber optic splitter, to an exterior of the tray of the element;

Figure 94A illustrates the mounting bracket and the fiber optic splitter in isolation removed from the element of Figure 94;

Figures 95 illustrates the element of Figure 94 with the mounting bracket used to hold fiber optic splitters defining another embodiment;

Figure 95A illustrates the mounting bracket and the fiber optic splitters in isolation removed from the element of Figure 95;

Figures 96 illustrates the element of Figure 94 with the mounting bracket used to hold fiber optic splitters defining yet another embodiment;

Figure 96A illustrates the mounting bracket and the fiber optic splitter in isolation removed from the element of Figure 96;

Figures 97 illustrates the element of Figure 94 with the mounting bracket used to hold a fiber optic splitter defining a fourth embodiment;

Figure 97A illustrates the mounting bracket and the fiber optic splitter in isolation removed from the element of Figure 97;

Figure 98 illustrates an element similar to those shown in Figures 80-82 and 94-97 utilizing a cable management insert configured for removable coupling to a frame member that is within the tray of the element;

Figure 98A is another perspective view of the element of Figure 98;

Figure 99 illustrates a partial perspective view of the element of Figure 98 with the tray in an open position;

Figure 99A is another perspective view of the element of Figure 99, shown without the cables;

Figure 100 illustrates a top view of the element of Figure 99;

Figure 101 is a rear perspective view of a cable management insert configured for mounting to a right side of the tray of the element of Figures 98-100 shown in isolation;

Figure 102 is a front perspective view of a cable management insert configured for mounting to a left side of the tray of the element of Figures 98-100 shown in isolation;

Figure 103 is a top view of the right insert of Figure 101;

Figure 104 is a top view of the left insert of Figure 102;

Figure 105 illustrates a frame member mountable within an element similar to that shown in Figures 98-100, wherein the frame member includes another embodiment of a cable management insert configured for removable coupling thereto;

Figure 106 is a front perspective view of the cable management insert configured for mounting to a right side of the frame member of Figure 105; and

Figure 107 is a front perspective view of the cable management insert configured for mounting to a left side of the frame member of Figure 105.

Detailed Description

Referring now to Figures 1-16, various embodiments of an optical fiber distribution element 10, or element 10, are shown. The elements 10 can be individually mounted as desired to telecommunications equipment including racks, frames, or cabinets. The elements 10 can be mounted in groups or blocks 12 which forms a stacked arrangement. In one embodiment, a vertical stack of elements 10 populates an optical fiber distribution rack.

Each element 10 holds fiber terminations, or other fiber components including fiber splitters and/or fiber splices. In the case of fiber terminations, incoming cables are connected to outgoing cables through connectorized cable ends which are connected by adapters, as will be described below.

Each element includes a chassis 20 and a movable tray 24. Tray 24 is movable with a slide mechanism 30 including one or more gears 32 and a set of two toothed racks or linear members 34.

Slide mechanism 30 provides for synchronized movement for managing the cables extending to and from tray 24. Entry points 36 on either side of chassis 20 allow for fixation of the input and output cables associated with each element 10. The radius limiters 38 associated with each slide mechanism 30 move in synchronized movement

relative to chassis 20 and tray 24 to maintain fiber slack, without causing fibers to be bent, pinched, or pulled.

Each tray 24 includes mounting structure 50 defining one or more of fiber terminations, fiber splitters, fiber splices, or other fiber components. As shown, mounting structure 50 holds adapters 52 which allow for interconnection of two connectorized ends of cables. Each tray 24 includes one or more frame members 56. In the example shown, two frame members 56 are provided. As illustrated, each frame member 56 is T-shaped. Also, each tray 24 includes two frame members 56 which are hingedly mounted at hinges 58. A top frame member 62 is positioned above a bottom frame member 64. The mounting structure 50 associated with each frame member 62, 64 includes one or more integrally formed adapter blocks 70. Adapter blocks 70 include a plurality of adapter ports for interconnecting to fiber optic connectors. A pathway 76 defines a generally S-shape from radius limiters 38 to adapter blocks 70. As shown, pathway 76 includes an upper level 78 and a lower level 80 in the interior. A portion 84 of pathway 76 is positioned adjacent to hinges 58 to avoid potentially damaging cable pull during pivoting movement of frame members 56. Flanges 86 and radius limiters 90 help maintain cables in pathways 76.

Tray 24 includes openings 96 to allow for technician access to the cable terminations at adapter blocks 70. In addition, the T-shapes of frame members 56 further facilitate technician access to the connectors.

Cables extending to and from element 10 can be affixed with a cable mount 100 as desired. Additional protection of the fiber breakouts can be handled with cable wraps 102. Radius limiters 106 can be additionally used to support and protect the cables.

The wrap 102 shown in Figure 16 is mounted horizontally to the tray 24 wherein both the front and rear ends of the wrap are mounted to horizontal mounts at similar horizontal planes. However, in other embodiments, where the wrap needs to be mounted to mounts that are at different planes or at planes that are perpendicular to each other, the wrap may be flexible enough to be able to be twisted around its longitudinal axis. As such, the front and the rear ends of the wrap may be mounted to mounts that are at perpendicular planes to each other and still not violate minimum bending

requirements for the cables as the trays are moved back and forth with respect to the elements. Such wraps may be used on all of the embodiments of the elements discussed herein.

Referring now to Figures 17-29, various examples of cable routings are illustrated for element 10.

If desired, more than one feeder cable can supply cabling to more than one element 10.

Referring now to Figures 30-41, various additional embodiments of elements 210 are shown. Element 210 includes a chassis 220 in a movable tray 224 mounted with a slide mechanism 230 which promotes synchronized movement of radius limiters 238. Each tray 224 includes two hingedly mounted frame members 256. Each frame member 256 has a middle portion 260 separated by openings 262 from side portions 264. Middle portion 260 can hold fiber terminations. Side portions 264 include radius limiters 270. Cover 266 goes over tray 224. Latches 268 latch tray 224 to cover 266 in the closed position.

A pathway 276 extends from either side from tray 224 to supply cables to each of trays 224. An upper level 278 and a lower level 280 supply the respective frame members 256 with cabling. A general S-shaped pathway 276 is defined wherein the pathway 276 passes close to hinges 258.

A dovetail 288 is used to hold cable mounts 286 and radius limiters 284.

An opening 290 in tray 224 allows for connector access by the technician. Similarly, openings 262 on each frame member 256 allow for technician access to the individual connectors.

To form a block 292 of plural elements 210, bars 294 and fasteners 296 are used. Bars 294 give a small spacing between each element 210.

Referring now to Figures 42-45, an alternative slide mechanism 330 is shown in alternative element 310. Slide mechanism 330 allows for movement of the trays and related radius limiters and synchronized movement similar to slide mechanism 30, 230. Alternative slide mechanism 330 includes two wheels 332 and two wires 334, 336. The wheels 332 are located on second part 342. The wires are looped in opposite directions and are connected to the first part 340 and the third part 344.

Referring now to Figures 46 and 47, an alternative radius limiter 420 is shown on alternative element 410. Radius limiter 420 includes friction members 430 which limit the amount of sliding movement of cables passing through radius limiter 420, to assist with cable management. Friction members 430 include flexible fingers which press lightly on the cables in radius limiter 420 to reduce or eliminate sliding movement of the cables in the radius limiter 420.

Referring now to Figures 48-52, a universal mounting mechanism 500 for releasably mounting a telecommunications chassis to a telecommunications fixture, such as an optical fiber distribution rack, is illustrated. In Figures 48-52, the universal mounting mechanism 500 is shown as having been adapted for and being used on an optical fiber distribution element 510 having features similar to those elements 210, 410 shown in Figures 30-47 of the present disclosure. With the universal mounting mechanism 500 of Figures 48-52, telecommunications chassis or elements such as elements 210, 410, and 510 can be mounted as desired to telecommunications fixtures or equipment such as racks, frames, or cabinets.

It should be noted that although the universal mounting mechanism 500 of the present disclosure has been shown as being used on a piece of telecommunications equipment such as the optical fiber distribution element 510 (which has similar features to those elements 210 and 410 of Figures 30-47), the optical fiber distribution element 510 is simply one example of telecommunications equipment or chassis on which the mounting mechanism 500 may be used for mounting to equipment such as telecommunications racks, frames, or cabinets. For use with the universal mounting mechanism 500 of Figures 48-52, the element 510 has been adapted to receive certain portions of the mounting mechanism 500. However, it should be understood that the mounting mechanism 500 of the present disclosure includes features having inventive aspects in isolation and can be used on other types of optical fiber distribution elements as long as the elements or chassis thereof are adapted to receive portions of the mounting mechanism 500.

Still referring to Figures 48-52, the universal mounting mechanism 500 will now be described in further detail.

Figure 48 shows a cross-sectional view of a portion of the universal mounting mechanism 500, wherein the mounting mechanism 500 is in a locked state or position. Figure 49 illustrates the universal mounting mechanism 500 in an unlocked position. Figure 50 illustrates a partially exploded perspective view of a portion of the universal mounting mechanism 500 being used with the optical fiber distribution element 510, which is similar to the elements 210, 410 shown in Figures 30-47, as noted above. Figure 51 illustrates the universal mounting mechanism 500 with the universal mounting brackets 502 of the mechanism 500 mounted to the element 510. Figure 51A is a close-up view of a portion of the universal mounting mechanism 500, illustrating a locking spring 504 of the mechanism 500 in a locked position with respect to the universal mounting bracket 502 of the mechanism 500. Figure 52 is a cross-sectional view of a portion of the universal mounting mechanism 500 showing the positional relationship between the universal mounting bracket 502 and a release handle 506 of the mounting mechanism 500 when the mechanism 500 is in a locked state.

The universal mounting mechanism 500 generally includes the right and left universal mounting brackets 502, release handles 506 for each of the mounting brackets 502, a cover 508 for each of the mounting brackets 502, and the locking spring 504 for each of the mounting brackets 502.

In the depicted embodiment, each of the universal mounting brackets 502 is designed for mounting two stacked elements 510. Thus, each of the right and left mounting brackets 502 includes two latch openings 512 adjacent the front 514 of the mounting bracket 502 (one for each element 510) and upper and lower mounting tabs 516 at the rear 518 of the bracket 502.

In the given embodiment, the mounting tabs 516 at the rear 518 of the mounting brackets 502 are designed to slidably mount the brackets 502 to fixtures such as telecommunications racks along a sideway or lateral direction. As such, in mounting elements 510 to a rack, the universal mounting brackets 502 are initially slid into openings provided on the rack using the mounting tabs 516. Once the brackets 502 are secured on a rack, the elements 510 can be slid onto the brackets 502 in a sliding fashion, as will be described in further detail. The latch openings 512 of the brackets 502 are, then, used to lock the elements 510 in place.

In using the universal mounting mechanism 500 of the present disclosure, each element 510, on each of the right and left sides thereof, defines a bracket channel 520. The channel 520 is configured to slidably receive the front portions 514 of the mounting brackets 502. The cover 508 closes the bracket channel 520 to the exterior of each element 510. The cover 508 defines a deflection ramp 522 at the inner face thereof, the purpose of which will be discussed in further detail below. The locking spring 504 is mounted to each element 510 such that an end portion 524 of the locking spring 504 can flex in and out of the latch opening 512 of the universal mounting bracket 502. As shown in the cross-sectional views of Figures 48 and 49 and in Figures 51 and 51A, the end portion 524 of the locking spring 504 defines a perpendicular locking face 526 and an angular insertion face 528. When an element 510 is initially being slidably mounted on the mounting bracket 502, the angled insertion face 528 rides over the front end 530 of the front portion 514 of the mounting bracket 502 until the end portion 524 of the locking spring 504 flexibly snaps into the latch opening 512.

The element 510, at this point, is prevented from being pulled out forwardly. The locking spring 504 abuts an inner front face 532 defined by the latch opening 512 of the mounting bracket 502 to prevent removal of the chassis from a rack.

The release handle 506 is positioned between the locking spring 504 and the cover 508. The release handle 506 has a grip portion 534 for pulling the release handle 506 forwardly to release the chassis for removal from the mounting brackets 502. The release handle 506 also defines a deflection tab 536 at the rear end 538. The deflection tab 536 is configured to ride over the deflection ramp 522 of the cover 508 when the grip portion 534 is pulled forwardly. The interaction of the deflection tab 536 and the deflection ramp 522 causes lateral inward movement of the deflection tab 536, which in turn, pushes the spring 504 laterally inwardly, clearing the end portion 524 of the locking spring 504 from the latch opening 512. In this manner, when the release handle 506 is pulled forwardly, the interaction of the deflection tab 536 and the deflection ramp 522 causes the release of the spring 504, and thus the entire element 510, from the mounting bracket 502. The chassis and the entire element 510 can be pulled forwardly from the mounting bracket 502.

In using the universal mounting mechanism 500 on the element 510, a tray of the element 510 has to be pulled from its chassis to allow enough room for gripping the release handle 506 as seen in Figure 52, to pull it forwardly. In initially mounting the element 510 to a rack using the universal mounting mechanism 500, the release handle 506 has to be either pushed rearwardly by the user to allow the spring 504 to be positioned in its locking position or the user can simply push a tray of the element 510 rearwardly to contact the grip portion 534 of the release handle 506 to push the release handle 506 rearwardly. Thus, when the element 510 is mounted to a rack using the universal mounting mechanism 500, the release handle 506 must be in its rearward position to allow the spring 504 to be in its locking position. Otherwise, if the release handle 506 is in its forward position, the element 510 can simply slide out of the brackets 502.

The release handle 506 defines a positive stop 540 that is configured to abut a stop face 542 defined by a portion of a slide mechanism 544 within the element 510. The abutment of the stop 540 with the stop face 542 prevents further forward pulling of the release handle 506.

The universal mounting mechanism 500 includes a design that may be retrofitted on a number of telecommunications chassis. As long as a bracket channel 520 is provided in the chassis and the chassis includes enough spacing on the sides thereof for receiving a locking spring 504, a release handle 506, and a cover 508 for interacting with the release handle 506 and closing the mounting mechanism 500 to the exterior of the chassis, the universal mounting mechanism 500 can be utilized on any given chassis.

Also, as noted above, the rear portion 518 of the mounting brackets 502 may be modified to fit different types of mounting configurations on different types of telecommunications racks, frames, or cabinets. The mounting arrangement of the brackets 502 of the present disclosure that utilizes the tabs 516 for lateral slide-locking is simply one example of a mounting arrangement. Also, even though the mounting mechanism 500 of the present disclosure has been shown with mounting brackets 502 that can accommodate two vertically stacked elements 510, the mounting brackets 502

can be modified to receive other number of chassis, including a single chassis per bracket 502.

In the given embodiment, the locking spring 504 is fixed to the chassis with fasteners 545, allowing the end portion 524 of the locking spring 504 to be flexible. Other fixing methods may be used for the locking spring 504 in other types of telecommunications equipment.

Referring now to Figures 53 and 54, an alternative radius limiter 638 is shown on the slide mechanisms of alternative elements 610. Elements 610 are generally similar in construction and function to those of the elements discussed previously. Radius limiter 638 defines a generally U-shaped configuration that leads cables from and to the element 610 while preserving minimum bend radius requirements.

The U-shaped radius limiter 638 defines an inner end 621 and an outer end 623 and a divider 625 extending from adjacent the inner end 621 to adjacent the outer end 623. The outer end 623 of the radius limiter 638 cooperates with a cable guide 684 that is mounted to the chassis 620 of the element 610 for leading cables to and from the tray 624 of the element 610.

The divider 625 of the radius limiter 638 forms two separate troughs 627, 629 for the radius limiter 638. The two troughs 627, 629 isolate and separate the cables (e.g., coming in and going out) of the element 610 into two distinct paths. According to one example cable routing configuration, the two troughs 627, 629 may guide the cables to the upper and lower levels 678, 680 defined toward the rear of the tray 624 while maintaining the S-shaped pathway 676 created within the element 610. The divider 625 of the radius limiter 638 includes a plurality of cable management tabs 631 mounted thereon for retaining the cables within the troughs 627, 629. A similar tab 633 is also found at the rear of the tray 624 for retaining the cables that are being lead to the upper and lower levels 678, 680. The tabs 631 and 633 may be removable, snap-on structures.

The tabs 631 and 633 cooperate with additional cable management fingers 635 defined both on the radius limiter 638 and toward the rear of the tray 624 in retaining the cables within the S-shaped pathway 676.

Referring now to Figures 55-61, a mounting system 700 for fixedly stacking two or more telecommunications elements in a vertical column or stack is illustrated. In

Figures 55-61, the mounting system 700 of the present disclosure is illustrated as being used to stack elements having features similar to those elements 610 shown in Figures 53-54.

It should be noted that although the mounting system 700 of the present disclosure has been shown as being used on a piece of telecommunications equipment such as the optical fiber distribution element 610 (which has similar features to those elements 10, 210, 410, and 510 of Figures 1-52), the optical fiber distribution element 610 is simply one example of telecommunications equipment on which the mounting system 700 may be used for fixedly stacking such elements for further mounting to equipment such as telecommunications racks, frames, or cabinets. As will be discussed in further detail below, the element 610 has been configured specifically to incorporate certain aspects of the mounting system 700. However, it should be understood that the mounting system 700 of the present disclosure includes features having inventive aspects in isolation and can be used on other types of optical fiber distribution elements as long as the elements or chassis thereof are adapted to incorporate aspects of the mounting system 700. According to certain embodiments of the disclosure, the mounting system 700 of the present disclosure may be used as a retro-fit solution on pre-existing telecommunications equipment by modifying certain aspects of the preexisting equipment to incorporate features of the system 700, as will be apparent from the following description.

Still referring to Figures 55-61, the mounting system 700 will now be described in further detail. Figures 55-59 illustrate the steps for stacking two of the elements 610 in a vertical stack or column using the mounting system 700 of the present disclosure. Figure 60 is a bottom perspective view of one of the elements 610 of Figures 55-59 and Figure 61 is a bottom plan view of the element 610 of Figure 60.

According to an example embodiment, the mounting system 700 includes a first locking feature 701 in the form of at least one stud 702 (e.g., a plurality of studs 702 as depicted) that is provided at a top surface 690 of an element 610 and a second locking feature 703 in the form of at least one slot 704 (e.g., a plurality of slots 704 as depicted) that is provided at a bottom surface 692 of an element 610. According to an example embodiment, to improve manufacturing efficiency and standardization, an element 610

may include both the studs 702 at its top surface 690 and the slots 704 at its bottom surface 692. Thus, when stacking similarly configured elements 610, the studs 702 that are located at the top surface 690 of an element 610 can cooperate with the slots 704 that are located at the bottom surface 692 of an adjacent element that is to be stacked vertically with the first element 610.

In addition to the studs 702 and slots 704 which cooperate to partially fix the elements 610 together, the mounting system 700 of the present invention also includes a third locking feature 705 in the form of a removably mounted slide lock 706. As will be described in further detail below, the slide lock 706 is configured to prevent two stacked elements 610 from relatively sliding along the horizontal direction so as to prevent removal of the studs 702 from the slots 704, and, thus, separation of the two elements 610.

Still referring to Figures 55-61, in the depicted embodiment, the studs 702 are located along both the right side 694 and the left side 696 of the element 610. Similarly, as shown in Figures 60 and 61, the slots 704 are also positioned on the right and left sides 694, 696 of the element 610 so as to align and cooperate with the studs 702 of an adjacent element 610 for using the mounting system 700.

Each stud 702 includes a stem portion 708 and a flange portion 710. Each slot 704 includes a receiver portion 712 and a retention portion 714. The receiver portion 712 is sized to accommodate the flange portion 710 of the stud 702. Once the flange portion 710 of a stud 702 has been inserted through the receiver portion 712 of a slot 704, the stem portion 708 of the stud 702 slides through the retention portion 714 until the flange portion 710 of the stud 702 is positioned above the retention portion 714. Further advancement of a stud 702 within a slot 704 is prevented due to the abutment of the stem portion 708 of the stud 702 with an end 716 of the retention portion 714 of the slot 704 that acts as a positive stop.

In this manner, once the flange portion 710 of a stud 702 has been positioned above the retention portion 714 of a slot 704, the stud 702 cannot be separated from the slot 704 along a direction perpendicular to the sliding direction.

As shown in Figure 55, when stacking two elements 610 together, the elements 610 are initially aligned to position the flange portions 710 of the studs 702 of a bottom

element 610 with the receiver portions 712 of the slots 704 of an upper element 610. As shown in Figures 56 and 57, after the elements 610 are brought together, the elements 610 are slid with respect to each other. In the depicted embodiment, the upper element 610 is slid rearwardly with respect to the bottom element 610. This movement results in the stem portions 708 of the studs 702 sliding through the retention portions 714 of the slots 704 and bringing the flange portions 710 of the studs 702 over the retention portions 714 of the slots 704. When the stem portion 708 finally abuts the positive stop defined by the end 716 of the slot 704 and the relative sliding of the elements 610 is completed, separation in the vertical direction is prevented. Separation of the two elements 610, at this point, requires a reversal of the steps used in fixing the two elements 610. For separation, the stem portions 708 of the studs 702 have to be slid through the retention portions 714 of the slots 704 until the flange portions 710 are aligned with the receiver portions 712 of the slots 704. And, at that point, the two elements 610 can be separated from each other along a vertical direction perpendicular to the sliding direction.

Since separation of the two elements 610, after they have been fixed via the studs 702 and the slots 704, requires reverse relative horizontal movement between the elements 610, the mounting system 700 of the present disclosure further includes the slide lock 706 noted above and shown in Figures 58 and 59. The slide lock 706 is configured to prevent two stacked elements 610 from sliding along the horizontal direction with respect to each other such that the studs 702 cannot be removed from the slots 704.

As shown in Figure 60, each element 610 has been provided with specific features to utilize the slide lock 706. In the example shown in Figure 60, each element 610 defines a cutout 718 at a lower side edge 720 thereof (i.e., lower cutout 718) at both the right and left sides 694, 696 of the element 610 and a cutout 722 at an upper side edge 724 thereof (i.e., upper cutout 722) at both the right and left sides 694, 696 of the element 610. The upper cutouts 722 are configured to align with and cooperate with the lower cutouts 718 when two elements 610 are stacked in order to use the slide lock 706 to prevent separation of the elements 610. Again, as noted above, each element 610

may be provided with both an upper cutout 722 and a lower cutout 718 for manufacturing efficiency and standardization of the parts.

It should be noted that although the depicted example of the mounting system 700 utilizes a slide lock 706 on both the right and left sides 694, 696 of an element stack, a slide lock 706 can be used on a single side of the stack if desired. Also, it should be noted that although the depicted example of the mounting system 700 utilizes a single slide lock 706 on each of the right and left sides 694, 696 of an element stack, more slide locks 706 can be used if desired.

Referring specifically now to a lower cutout 718 of an element 610, the cutout 718 defines both a bottom notch 726 and a side notch 728. The upper cutout 722 defines both a top notch 730 and a side notch 732. The cutouts 718, 722 are configured such that when the lower cutout 718 of an upper element 610 aligns with the upper cutout 722 of a lower element 610, an opening 734 is created between the two elements 610. The opening 734 is created by the alignment of the bottom notch 726 of a lower cutout 718 and the top notch 730 of an upper cutout 722.

The slide lock 706 is inserted into the opening 734 and prevents any horizontal movement between two stacked elements 610. The slide lock 706, according to the depicted embodiment, is a removable snap-fit structure that includes a flexible cantilever tab 736. The flexible cantilever tab 736 provides a frictional fit against the top and bottom notches 730, 726 of the upper and lower cutouts 722, 718, respectively, and can be flexed back toward the center of the slide lock 706 in removing the slide lock 706.

The side notches 732, 728 of the upper and lower cutouts 722, 718 also align when the elements 610 are moved into position. The side notches 732, 728 accommodate a user's fingers for accessing the slide lock 706 for either insertion or removal.

Thus, the mounting system 700 of the present disclosure provides a quick-attach solution that can be used in stacking elements 610 in a column for further mounting to equipment such as telecommunications racks, frames, or cabinets. The mounting system 700 of the present disclosure provides an unobtrusive attachment solution that can be incorporated in a variety of telecommunications distribution element designs.

The mounting system 700 of the present disclosure may be used as a retro-fit solution on pre-existing telecommunications equipment with slight modification to certain aspects of the preexisting equipment to incorporate features of the system.

The mounting system 700 may be used to mount or stack two or more elements (such as the optical fiber distribution elements 610) that have similar configurations.

The mounting system 700 may also be used to mount or stack dissimilar equipment together if those pieces of equipment include features of the system 700 that allow them to intermate. For example, elements including equipment other than optical distribution features may be mounted to optical distribution elements such as elements 610 using the system 700 of the present disclosure as long as those equipment are configured with features of the system 700 that allow them to intermate with the features of equipment such as elements 610.

The mounting or stacking system 700 of the present disclosure may be used in instances where a single element includes features for mounting that element to a telecommunications rack, frame, or cabinet and other elements may be stacked with respect to that element using the system 700. For example, as shown in the example version of the element 510 in Figures 48-52, an element or chassis may include a universal quick-connect mounting mechanism similar to mechanism 500 of Figures 48-52 including universal mounting brackets 502 for releasably mounting that element or chassis to a telecommunications fixture, such as an optical fiber distribution rack. Using the stacking system 700 of the present disclosure, only one of the elements that are to be mounted to a separate fixture such as a rack would need to have the structure for utilizing a mechanism such as the universal mounting mechanism 500. The rest of the elements could be stacked with respect to that element by using the mounting or stacking system 700 of the present disclosure that relatively fixes the elements and prevents relative sliding between the elements and relative separation between the elements in a direction generally perpendicular to the direction of the relative sliding.

The element utilizing the mounting features (such as the universal quick-connect mechanism 500 shown in Figures 48-52) for mounting to a separate telecommunications fixture may be located at the top of the stack, at the bottom of the

stack, or in the middle of the stack using the features of the stacking system 700 of the present disclosure.

In using a mounting system such as the universal quick-connect mechanism 500 as shown in Figures 48-52, since the tray of an element has to be pulled from its chassis to allow enough room for gripping the grip portion 534 of the release handle 506, as seen in Figure 52, to pull the tray forwardly, it might be useful for a technician to know from an exterior of an element whether that element is one that includes the quick-connect mechanism 500.

For this reason, as illustrated in the examples of elements 1810 shown in Figures 81 and 82 and elements similar to elements 1810 shown in Figures 92 and 93, the U-shaped radius limiters 1838 on these elements 1810 may define at least one opening 2028 (two openings in the depicted version) at a front face thereof for allowing a user to see whether an element includes mounting features such as the universal quick-connect system 500 from an exterior of the element. In the version of the elements 1810 shown in Figures 81, 82, 92, and 93, at least a portion of the release handle 506 is visible from an exterior of the element via the openings 2028 even when the element is in a fully-closed position. In Figure 92, only the top element 1810 in the stack of elements is illustrated as having a quick-connect mechanism 500. A portion of the release handle 506 is visible through the opening 2028 only on the top element 1810. Figure 93 illustrates a close-up view of the front face of the U-shaped radius limiter 1838 showing the opening 2028.

Referring now to Figures 62-65, another embodiment of a mounting system 900 for fixedly stacking two or more telecommunications elements in a vertical column or stack is illustrated. In Figures 62-65, the mounting system 900 of the present disclosure is illustrated as being used to stack elements 810 having features similar to those elements 610 shown in Figures 53-61.

It should be noted that although the mounting system 900 of the present disclosure has been shown as being used on a piece of telecommunications equipment such as the optical fiber distribution element 810 (which has similar features to those elements 10, 210, 410, 510, and 610 of Figures 1-61), the optical fiber distribution element 810 is simply one example of telecommunications equipment on which the

mounting system 900 may be used for fixedly stacking such elements for further mounting to equipment such as telecommunications racks, frames, or cabinets. As will be discussed in further detail below, the element 810 has been configured specifically to incorporate certain aspects of the mounting system 900. However, it should be understood that the mounting system 900 of the present disclosure includes features having inventive aspects in isolation and can be used on other types of optical fiber distribution elements as long as the elements or chassis thereof are adapted to incorporate aspects of the mounting system 900. According to certain embodiments of the disclosure, the mounting system 900 of the present disclosure may be used as a retro-fit solution on pre-existing telecommunications equipment by modifying certain aspects of the preexisting equipment to incorporate features of the system 900, as will be apparent from the following description.

Still referring to Figures 62-65, the mounting system 900 will now be described in further detail. Figures 62-63 illustrate the steps for stacking two of the elements 810 in a vertical stack or column using the mounting system 900 of the present disclosure. Figure 64 is a cross-section taken along line 64-64 of Figure 63, and Figure 65 illustrates a portion of the cross-section of Figure 64 from a direct side view.

According to an example embodiment, the mounting system 900 includes a first locking feature 901 in the form of at least one stud 902 (e.g., a plurality of studs 902 as depicted) that is provided at a top surface 890 of an element 810 and a second locking feature 903 in the form of at least one slot 904 (e.g., a plurality of slots 904 as depicted) that is provided at a bottom surface 892 of an element 810. According to an example embodiment, to improve manufacturing efficiency and standardization, an element 810 may include both the studs 902 at its top surface 890 and the slots 904 at its bottom surface 892. Thus, when stacking similarly configured elements 810, the studs 902 that are located at the top surface 890 of an element 810 can cooperate with the slots 904 that are located at the bottom surface 892 of an adjacent element that is to be stacked vertically with the first element 810. It should be noted that slots 904 are similar in configuration to slots 704 that are shown at the bottom of the element 610 in Figures 60-61.

In addition to the studs 902 and slots 904 which cooperate to partially fix the elements 810 together, the mounting system 900 of the present invention also includes a third locking feature 905 in the form of a slide lock 906. As will be described in further detail below, the slide lock 906 is configured to prevent two stacked elements 810 from relatively sliding along the horizontal direction so as to prevent removal of the studs 902 from the slots 904, and, thus, separation of the two elements 810.

Still referring to Figures 62-65, in the depicted embodiment, the studs 902 are located along both the right side 894 and the left side 896 of the element 810. Similarly, the slots 904 are also positioned on the right and left sides 894, 896 of the element 810 so as to align and cooperate with the studs 902 of an adjacent element 810 for using the mounting system 900.

Each stud 902 includes a stem portion 908 and a flange portion 910. Each slot 904 includes a receiver portion 912 and a retention portion 914. The receiver portion 912 is sized to accommodate the flange portion 910 of the stud 902. Once the flange portion 910 of a stud 902 has been inserted through the receiver portion 912 of a slot 904, the stem portion 908 of the stud 902 slides through the retention portion 914 until the flange portion 910 of the stud 902 is positioned above the retention portion 914. Further advancement of a stud 902 within a slot 904 is prevented due to the abutment of the stem portion 908 of the stud 902 with an end surface 916 defined by the retention portion 914 of the slot 904 that acts as a positive stop.

In this manner, once the flange portion 910 of a stud 902 has been positioned above the retention portion 914 of a slot 904, the stud 902 cannot be separated from the slot 904 along a direction perpendicular to the sliding direction.

As shown in Figure 62, when stacking two elements 810 together, the elements 810 are initially aligned to position the flange portions 910 of the studs 902 of a bottom element 810 with the receiver portions 912 of the slots 904 of an upper element 810. As shown in Figures 63 and 64, after the elements 810 are brought together, the elements 810 are slid with respect to each other. In the depicted embodiment, the upper element 810 can be slid rearwardly with respect to the bottom element 810 or the bottom element 810 can be slid forwardly with respect to the upper element 810. This movement results in the stem portions 908 of the studs 902 sliding through the retention

portions 914 of the slots 904 and bringing the flange portions 910 of the studs 902 over the retention portions 914 of the slots 904. When the stem portion 908 finally abuts the positive stop defined by the end surface 916 of the slot 904 and the relative sliding of the elements 810 is completed, separation in the vertical direction is prevented. Separation of the two elements 810, at this point, requires a reversal of the steps used in fixing the two elements 810. For separation, the stem portions 908 of the studs 902 have to be slid through the retention portions 914 of the slots 904 until the flange portions 910 are aligned with the receiver portions 912 of the slots 904. And, at that point, the two elements 810 can be separated from each other along a vertical direction perpendicular to the sliding direction.

Since separation of the two elements 810, after they have been fixed via the studs 902 and the slots 904, requires reverse relative horizontal movement between the elements 810, the mounting system 900 of the present disclosure further includes the slide lock 906 noted above and shown in Figures 65 and 66. The slide lock 906 is configured to prevent two stacked elements 810 from sliding along the horizontal direction with respect to each other such that the studs 902 cannot be removed from the slots 904.

As shown in Figures 64 and 65, each element 810 has been provided with specific features to utilize the slide lock 906. In the example shown in Figures 62-65, the slide lock 906 is defined by a cantilever arm 918. The cantilever arm 918 defines a stop surface 920, at least a portion of which is configured to abut the stud 902 and prevent the stud 902 from sliding horizontally from the retention portion 914 to the receiver portion 912 of the slot 904. The stop surface 920 captures the stud 902 against the end surface 916.

As shown in Figures 64-65, at least a portion of the cantilever arm 918 (i.e., the portion that defines the stop surface 920) communicates with the retention portion 914 of the slot 904. In this manner, the portion of the cantilever arm 918 that communicates with the retention portion 914 of the slot 904 can abut the stud 902 and prevent the stud 902 from sliding.

As also shown in Figures 64-65, the cantilever arm 918 defines a tapered flex surface 922 that is configured to facilitate flexing of the cantilever arm 918 elastically

upwardly as the stud 902 is slid from the receiver portion 912 of the slot 904 toward the retention portion 914 of the slot 904. The flex surface 922 tapers downwardly as it extends in a direction from the back to the front of the element 810. The flex surface 922 intersects the stop surface 920 of the cantilever arm 918 to define a lower front edge 924. In order to horizontally move the stud 902 from the retention portion 914 to the receiver portion 912 of the slot 904, the edge 924 has to be cleared by the flange portion 910 of the stud 902. This may be accomplished by flexing the cantilever arm 918 elastically upwardly in order to pass the flange portion 910 of the stud 902 thereunder.

In should be noted that a slide lock 906 in the form of a cantilever arm 918 may be provided at one or more of the slots 904 found on the elements 810. In certain embodiments, each slot 904 may include a cantilever arm 918 communicating therewith for providing the slide lock 906. In the example depicted in Figures 64-65, only two of the three slots 904 on each side of the element include the cantilever arm 918.

It should also be noted that although the depicted example of the mounting system 900 utilizes a slide lock 906 on both the right and left sides 894, 896 of an element stack, a slide lock 906 can be used on a single side of the stack if desired. However, using a slide lock 906 on both sides 894, 896 of the element stack may provide more stability to the locking mechanism.

Thus, the mounting system 900 of the present disclosure, similar to the locking system 700, provides a quick-attach solution that can be used in stacking elements 810 in a column for further mounting to equipment such as telecommunications racks, frames, or cabinets. The mounting system 900 of the present disclosure provides an unobtrusive attachment solution that can be incorporated in a variety of telecommunications distribution element designs. The mounting system 900 of the present disclosure may be used as a retro-fit solution on pre-existing telecommunications equipment with slight modification to certain aspects of the preexisting equipment to incorporate features of the system.

The mounting system 900 may be used to mount or stack two or more elements (such as the optical fiber distribution elements 810) that have similar configurations.

The mounting system 900 may also be used to mount or stack dissimilar equipment together if those pieces of equipment include features of the system 900 that allow them to intermate. For example, elements including equipment other than optical distribution features may be mounted to optical distribution elements such as elements 810 using the system 900 of the present disclosure as long as that equipment is configured with features of the system 900 that allow them to intermate with the features of equipment such as elements 810.

The mounting or stacking system 900 of the present disclosure may be used in instances where a single element includes features for mounting that element to a telecommunications rack, frame, or cabinet and other elements may be stacked with respect to that element using the system 900. For example, as shown in the example version of the element 510 in Figures 48-52, an element or chassis may include a universal quick-connect mounting mechanism similar to mechanism 500 of Figures 48-52 including universal mounting brackets 502 for releasably mounting that element or chassis to a telecommunications fixture, such as an optical fiber distribution rack. Using the stacking system 900 of the present disclosure, only one of the elements that are to be mounted to a separate fixture such as a rack would need to have the structure for utilizing a mechanism such as the universal mounting mechanism 500. The rest of the elements could be stacked with respect to that element by using the mounting or stacking system 900 of the present disclosure that relatively fixes the elements and prevents relative sliding between the elements and relative separation between the elements in a direction generally perpendicular to the direction of the relative sliding.

The element utilizing the mounting features (such as the universal quick-connect mechanism 500 shown in Figures 48-52) for mounting to a separate telecommunications fixture may be located at the top of the stack, at the bottom of the stack, or in the middle of the stack using the features of the stacking system 900 of the present disclosure.

Referring now to Figures 66-67, the element 810 of Figures 62-65 is shown with the tray 824 of the element 810 at an extended position to illustrate some of the internal features of the element 810. As shown, in Figure 66, the tray 824 is illustrated empty

without any frame members, and in Figure 67, the tray 824 is illustrated populated with frame members, one of which is further illustrated in further detail in isolation in Figure 79. As will be discussed, the tray 824 of element 810 may be used with a variety of different versions of frame members, examples of which will be discussed in further detail below.

Still referring to Figures 66-67, the element 810 includes a first pivotable snap-fit cover 811 over a U-shaped radius limiter 838 that is on the slide mechanism of the element 810. The U-shaped radius limiter 838 includes features similar to radius limiter 638 shown in Figures 53-54. The element 810 further includes a second pivotable snap-fit cover 813 over a rear portion 815 of the S-shaped cable pathway 876 defined within the tray 824 of the element 810. The covers 811, 813 are shown in an open configuration in Figure 66 and shown in a closed configuration in Figure 67.

The S-shaped pathway 876, similar to the embodiment of the element 610 discussed previously, is divided into two separate troughs 827, 829 by a divider 825 that is toward the rear of the tray. According to an example cable routing configuration, the two troughs 827, 829 may guide the cables to upper and lower levels 878, 880 defined toward the rear of the tray 824 while maintaining the S-shaped pathway 876 created within the element 810. The covers 811, 813 help retain cables within the S-shaped pathway 876 defined within the tray 824 as the cables lead to and from the radius limiter 838 to the tray 824 within element 810. The pivotability aspect of the covers 811, 813 facilitates initial placement of the cables within the S-shaped pathway 876 and provides access to the cables for removal. As shown, the covers 811, 813 may also include apertures 821 for viewing the cables within the S-shaped pathway 876 from an exterior of the tray 824 when the covers 811, 813 are closed.

Referring now to Figures 68-79, as noted above, various hingedly mountable frame members that may be used within the trays 824 of the elements 810 are illustrated. Each of the frame members in Figures 68-79 is illustrated in isolation removed from the tray 824 of the element 810. In Figure 67, discussed previously, the tray 824 is shown populated with frame members, one of which is illustrated in isolation in further detail in Figure 79.

Similar to the earlier embodiments of the elements, each tray 824 of element 810 may include two frame members in a stacked arrangement, wherein the frame members are hingedly mounted at hinges 858. A top frame member is normally positioned above a bottom frame member. As discussed previously, the S-shaped pathway 876 includes an upper level 878 and a lower level 880 in the interior. The upper level 878 is configured to supply an upper frame member, and the lower level 880 is configured to supply a lower frame member that is positioned below the upper frame member. The trays cooperate with the frame members in defining openings for guiding the cables to the specified frame members.

A portion 884 of the S-shaped pathway 876 is positioned adjacent to hinges 858 to avoid potentially damaging cable pull during pivoting movement of frame members.

Similar to previously discussed trays, each tray 824 of element 810 includes openings 897 to allow for technician access to the cable terminations within the tray 824. Furthermore, as will be discussed in further detail, most of the embodiments of the frame members that are configured to be used within the tray 824 of element 810 include a middle portion that is separated by openings from side portions, similar to the frame members discussed previously, for allowing connector access to the technicians.

Referring now to Figure 68, an embodiment of a frame member 956 that can be used with the tray 824 of element 810 is illustrated in isolation. Each frame member 956 has a middle portion 960 separated by openings 962 from side portions 964. Middle portion 960 can hold fiber terminations in the form of fiber optic adapters that can receive fiber optic connectors. Side portions 964 include radius limiters 970. The frame member 956 may include openings 957 at a rear portion thereof for allowing cables to be routed from an upper frame member 956 to a lower frame member 956. Such openings 957 adjacent the hinges of the frame members can be used on other frame members of the present application.

Referring now to Figure 69, another embodiment of a frame member 1056 that can be used with the tray 824 of element is illustrated in isolation. Frame member 1056 is configured to hold fiber terminations in the form of fiber optic connectors that are different in format than those received by the frame member 956 of Figure 68.

Referring now to Figure 70, an embodiment of a frame member 1156 that is similar in configuration to the frame member 956 of Figure 68 is illustrated. The middle portion 1160 of frame member 1156 can hold fiber terminations in the form of fiber optic adapter blocks.

Referring now to Figures 71-72, another embodiment of a frame member 1256 that can be used with the tray 824 of element 810 is illustrated in isolation. Frame member 1256 is configured to hold fiber terminations in the form of fiber optic adapters that can receive fiber optic connectors at a center portion 1260 of the frame member 1256. The front portion 1261 of the frame member 1256 includes splice regions 1263 for splicing of fiber optic cables. A cover 1265 may be used to cover the splice regions 1263.

Referring now to Figure 73, another embodiment of a frame member 1356 that can be used with the tray 824 of element 810 is illustrated in isolation. Frame member 1356 defines a plurality of individually pivotable flip-trays 1357 that can support fiber optic equipment in the form of fiber terminations such as fiber optic connectors and other fiber optic equipment such as splitters 1387. Radius limiters 1359 in the form of spools are positioned at both the right side 1361 and the left side 1363 of each flip-tray 1357.

Figure 74 illustrates a frame member 1456 that is similar in construction to the frame member 1356 of Figure 73. Frame member 1456 defines splice regions 1458 at the center portion 1460 of the individual flip-trays 1457 between the radius limiters 1459, in addition to fiber optic splitters 1387.

Figure 75 illustrates a base portion 1556 for a frame member that can be used to mount different modular elements for changing the configuration or the layout of the fiber optic connectivity within the frame member. The base portion 1556 has a middle portion 1560 separated by openings 1562 from side portions 1564. Middle portion 1560 can hold fiber terminations in the form of fiber optic adapters that can receive fiber optic connectors. The side portions 1564 are configured to receive different modular elements for varying the layout of a frame member. The modular elements can be mounted to the side portions 1564 via snap-fit interlocks. For example, the base portion 1556 is shown in Figure 76 with a pair of modular elements 1569 that are configured to

provide a layout that is similar in configuration to that of the frame member 956 of Figure 68, wherein the modular elements 1569 define radius limiters 1570.

Figure 77 illustrates the snap-fit feature of the modular elements 1569 in a cross-sectional view. According to the depicted example, the modular elements 1569 may include a plurality of hooks 1590 on a first side 1591 for catching against a first edge 1592 defined by one of the side portions 1564. The modular elements 1569 may include a plurality of elastically flexible snap-fit catches 1593 on an opposing second side 1594 for catching against an opposing second edge 1595 defined by the side portions 1564. In this manner, using the hooks 1590 and catches 1593, the modular elements 1569 can be mounted to the side portions 1564 with a snap-fit and removed therefrom to allow changing the layout of a frame member.

Figure 78 illustrates an embodiment of a frame member 1656 that includes one of the modular elements 1569 of Figures 76-77 and another modular element 1669 defining a splice region 1671. Figure 79 illustrates a frame member 1756 that has been formed by snap-fitting two modular elements 1669 that include splice regions 1671 to the base portion 1556. A pair of the frame members 1756 can be seen in the tray 824 of element 810 of Figure 67 as discussed previously.

Figure 80 illustrates another embodiment of an element 1810 having features similar to the element 810 of Figures 62-67. The element 1810 defines at least one opening 1811 (two openings in the depicted version) at a front face 1814 defined by the slidable tray 1824 of the element 1810. The opening(s) 1811 allow a user to see the type of frame member that is being housed within the tray 1824 from an exterior of the element 1810. For example, frame members housed within the tray 1824 such as the various hingedly-mountable frame members illustrated in Figures 68-79 may be color-coded based on the different types of frames or connectivity arrangements provided by the frames. The opening(s) 1811 allow a user or technician to be able to see the color of the frame member within the tray 1824 from an exterior of the element 1810 and determine the type or the connectivity arrangement without having to slidably open the tray 1824.

Even though all of the various embodiments of the elements illustrated in the present application have been shown with telecommunications equipment housed

within the trays of the elements, Figures 81-82 illustrate the element 1810 of Figure 80 with a piece of telecommunications equipment (e.g., fiber optic splitter) 1900 mounted to an exterior of the tray 1824. The fiber optic splitter 1900 is positioned adjacent a U-shaped radius limiter 1838 that is positioned on the front of the element 1810 with the inputs or the outputs of the fiber optic splitter 1900 generally aligned with an entrance 1839 of the U-shaped radius limiter 1838. In this manner, cables extending from the fiber optic splitter 1900 can be managed by the radius limiter 1838 as the cables lead into or extend out of the tray 1824. As in the previous embodiments of the elements discussed, the U-shaped radius limier 1838 is configured to be able to slide with respect to the chassis 1820 of the element 1810. The radius limiter 1838 moves in synchronized movement relative to the chassis and the tray 1824 to maintain fiber slack, without causing fibers extending from the splitter 1900 to be bent, pinched, or pulled.

In the embodiment of the element 1810 shown in Figures 80-82, the fiber optic splitter 1900 is mounted to one of the sidewalls 1812 of the element 1810 with locking features 1862. In the depicted embodiment, the locking features 1862 are provided in the form of a slide lock 1864 that is defined by intermating dovetail structures between the wall 1812 and the optical device 1900 itself. It should be noted that the slide lock 1864 can be configured in a variety of different configurations as long as it allows equipment such as the optical equipment 1900 to be slidably and removably coupled to the sidewall 1812. The dovetail structures may be defined by dovetails that are provided on the optical equipment 1900 (or on a transition piece to which the optical equipment 1900 is mounted to) and dovetail receivers 1868 that are provided on the walls 1812.

As shown in Figures 80-82, each dovetail receiver 1868 defines a receiving portion 1867 and a retention portion 1869. When an optical device 1900 is mounted to the side wall 1812, each dovetail on the equipment 1900 side is inserted into and through the receiving portion 1867 in a transverse direction, and the device 1900 is slid rearwardly along a longitudinal direction until the dovetail thereof is moved into the retention portion 1869 of the dovetail receiver 1868. The movement is reversed for removal of the optical device 1900 from the sidewall 1812, wherein the device 1900 is first slid forwardly and then moved transversely to clear the dovetail receivers 1868.

In the depicted example of the element 1810, the side wall 1812 is configured with two rows of dovetail receivers 1868 for receiving two fiber optic devices 1900 in a stacked arrangement.

It should be noted that the locking features 1862 in the form of dovetail receivers 1868 of the element 1810 may be used for mounting a variety of different structures at the sidewalls 1812 of the element 1810, such as additional radius limiters, cable fixation clamps, other fiber optic equipment, etc.

Figures 94-97 depict an element similar to element 1810 of Figure 80 that utilizes a transition piece in the form of a mounting bracket 2100 for mounting telecommunications equipment (e.g., fiber optic splitter) 1900 to an exterior of the tray 1824. The mounting bracket 2100 is configured to receive a piece of telecommunications equipment (or multiple elements in a stacked arrangement that fit within the footprint defined by the mounting bracket 2100) with a snap-fit interlock. As shown in Figures 94-97, the mounting bracket defines flexible upper and lower walls 2102, 2104 that are configured to elastically flex in accepting the telecommunications equipment. Each of the upper and lower walls 2102, 2104 define finger extensions 2106 with ramped tabs 2108 that are configured to retain the equipment once received therein.

The mounting bracket 2100 can utilize locking features similar to locking features 1862 illustrated in Figures 80-82 and described above. The locking features may be provided in the form of a slide lock that is defined by intermating dovetail structures between the wall 1812 of element 1810 and the bracket 2100 itself. It should be noted that such a slide lock can be configured in a variety of different configurations as long as it allows mounting brackets such as bracket 2100 to be removably coupled to the sidewall 1812. Similar to discussed previously, the dovetail structures may be defined by dovetails that are provided on the bracket 2100 and dovetail receivers 1868 that are provided on the walls 1812 of the element 1810.

Figure 94 illustrates the element 1810 with a fiber optic splitter similar to splitter 1900 discussed above mounted to the element 1810 via the mounting bracket 2100. Figure 94A illustrates the mounting bracket 2100 and the splitter 1900 in isolation removed from the element 1810.

Figure 95 illustrates a stack of four smaller footprint splitters 1900a mounted to the element 1810 via the mounting bracket 2100. Figure 95A illustrates the mounting bracket 2100 and the small footprint splitters 1900a in isolation removed from the element 1810.

Figure 96 illustrates a stack of two medium footprint splitters 1900b mounted to the element 1810 via the mounting bracket 2100. Figure 96A illustrates the mounting bracket 2100 and the medium footprint splitters 1900b in isolation removed from the element 1810.

Figure 97 illustrates another fiber optic splitter 1900c that is mounted to the element 1810 via the mounting bracket 2100. The fiber optic splitter 1900c of Figure 97 is a device that occupies the same footprint of the splitter 1900 shown in Figure 94 and 94A and is formed from a combination of two of the medium footprint splitters 1900b illustrated in Figures 96 and 96A. Figure 97A illustrates the mounting bracket 2100 and the splitter 1900c in isolation removed from the element 1810.

Thus, as shown in Figures 94-97 and discussed above, the mounting bracket 2100 can be used to mount a variety of telecommunications devices to an element similar to element 1810 as long as the devices occupy the given footprint provided by the bracket 2100. The configuration of the bracket 2100 can also be varied if a different size capacity is desired. Also, as noted above, the illustrated and discussed latching method is only one example of a variety of methods that can be used to couple devices such as the mounting bracket 2100 to sidewalls 1812 of the elements 1810.

As noted above, locking features in the form of dovetail receivers may be used for mounting a variety of different structures at the sidewalls 1812 of the element 1810, such as additional radius limiters, cable fixation clamps, other fiber optic equipment, etc.

For example, Figures 86A-86C illustrate an example of a cable fixation device or clamp 1899 that may be slidably mounted to the sidewalls 1812 of element 1810. Cable fixation devices similar to device 1899 shown in Figures 86A-86C are described in further detail in International Publication No. WO 2014/173930, the entire disclosure of which is incorporated herein by reference.

The cable fixation device 1899 is similar to the cable fixation devices shown and described in WO 2014/173930 in that the cable mount 1899 is configured for securing an incoming cable such as a distribution or feeder cable to a side of an element such as an element 1810. The cable mount 1899 is sized for mounting cables that are larger in diameter than those mounted by the cable fixation devices in WO 2014/173930.

Similar to the cable fixation devices in WO 2014/173930, the cable mount 1899 of the present application is defined by a base portion 1901 and a fiber routing portion 1903 that is configured to be mounted to the base portion 1901 with a snap-fit interlock.

As shown in Figure 86A, the fiber routing portion 1903 defines flexible cantilever fingers 1905 with ramped tabs 1907 that are configured to be received within slots 1909 on the base portion 1901. When the fiber routing portion 1903 is snap-fit with respect to the base portion 1901, the two portions 1901, 1903 cooperatively form the cable mount 1899.

The cable mount 1899 includes features for securing or clamping the strength members of an incoming cable to limit axial pull on the cable to preserve the optical fibers. A strength member clamp 1936 of the cable mount 1899 is defined by the interaction of a portion (i.e., a clamping surface 1938) of the base portion 1901 and fixation plates 1940 that are configured to be clamped against the base portion 1901 via fasteners 1942. The strength member clamp 1936 will be described in further detail below. The portion of the base 1901 that forms the clamping surface 1938 for clamping the strength members may also be referred to as a first clamp member, and the fixation plates 1940 may also be referred to as second clamp members of the strength member clamp 1936.

The cable mount 1899, once assembled, defines a front end and a rear end. The cable mount 1899 is configured to receive an incoming cable through the rear end. The base portion 1901 of the cable mount 1899 defines a jacket channel 1920 for housing the jacket of the incoming cable. A strength member pocket 1924 is defined by the base portion for receiving strength members of the incoming cable. The fiber routing portion 1903 of the cable mount 1899 includes features for guiding individual fiber-carrying loose tubes to different desired directions as the fibers extend toward the front end of the cable mount 1899.

The jacket channel 1920 is defined by upper and lower transverse walls 1931, 1933. A divider wall 1935 of the cable mount 1899 separates the jacket channel 1920 from the strength member pocket 1924. The strength member pocket 1924 is defined on an opposite side of the divider wall 1935 from the jacket channel 1920. The divider wall 1935 defines a pair of openings 1937 through which the jacket channel 1920 communicates with the strength member pocket 1924. When a cable is received from the rear end of the cable mount 1899, the strength members of the cable protruding from the jacket of the cable are inserted into the strength member pocket 1924 through the openings 1937 before being clamped using the strength member clamp 1936.

According to the depicted embodiment, the base portion 1901 of the cable mount 1899 is configured to be mounted to equipment such as element 1810 with a snap-fit interlock. As shown, the base portion defines a cantilever arm 1911 with a ramped tab 1913 adjacent the front end of the cable mount 1899 for interlocking with a notch that may be provided on a piece of telecommunications equipment. The base portion 1901 of the cable mount 1899 also defines catches 1915 having dovetail profiles along the base portion 1901 that are configured to slidably mate with intermating structures provided on the element 1810. In this manner, the cable mount 1899 may be slidably attached to the element 1810 before being locked into a notch defined by the equipment with the cantilever arm 1911. It should be noted that a snap-fit interlock utilizing dovetail profiles and a flexible cantilever lock is only one example of an attachment mechanism that may be used to mount the cable mount 1899 to an element such as element 1810 and that other types of attachment mechanisms or methods (that limit axial pull on a secured cable) may be used.

As noted above, the cable mount 1899 is configured for securing or clamping the strength members of an incoming cable to limit axial pull on the cable to preserve the optical fibers. Once the strength members of an incoming cable are inserted into the strength member pocket 1924 through the openings 1937, the strength members may be clamped between the clamping surface 1938 defined by the base portion 1901 and the fixation plates 1940.

The fixation plates 1940 each define a fastener mount 1941 that has a threaded opening 1943 for receiving the fastener 1942 when clamping the fixation plates 1940

with respect to the base portion 1901. The fastener mount 1941 defines a throughhole 1963 that extends along a longitudinal axis of the fixation plates (generally perpendicular to the threaded opening 1943) that is for receiving the strength member of the cable. When the fasteners 1942 are used to clamp the fixation plates 1940 with respect to the base portion 1901, at least a portion of each fastener may extend through the threaded opening 1943 and into the throughhole. The throughhole 1963 is preferably sized such that a strength member can extend therethrough without interference from the fastener 1942 that extends at least partially into the throughhole 1963.

The fastener mount 1941 of each fixation plate 1940 extends from a top of the fixation plate 1940 to a portion of the fixation plate 1940 that defines a clamping surface 1945. The clamping surface 1945 of the fixation plate 1940 is configured to abut against the clamping surface 1938 defined by the base portion 1901 in clamping the strength member of the cable. As noted above, clamping the fixation plates 1940 against the base portion 1901 is accomplished by using the fasteners 1942, which are threadedly engaged with the fastener mounts 1941 and which draw the fixation plates 1940 towards the base portion 1901. The base portion 1901 defines openings 1917 that are configured to accommodate and receive the fastener mounts 1941 as the fixation plates 1940 are pulled up with respect to the base portion 1901.

The fiber routing portion 1903 of the cable mount 1899 is configured to receive and guide the fiber carrying tubes of a cable being mounted using the cable mount 1899. Fiber carrying tubes are lead up a ramp 1987 defined by the fiber routing portion 1903 after the strength member of the cable has been separated therefrom and has been inserted into the strength member pocket 1924. The divider wall 1935 keeps the fiber carrying tubes and the cable jacket separate from the strength member pocket 1924 similar to the embodiments of the cable mount discussed previously. In this manner, when the cables are subjected to pulling forces, the fiber carrying components are isolated from the part of the cable mount that clamps the strength member.

The fiber routing portion 1903 of the cable mount 1899 defines a pair of fastener mounts 1919. The fastener mounts 1919 define pockets 1921 for accommodating the heads of the fasteners 1942. The fastener mounts 1919 allow the fasteners 1942 to pass

from the fiber routing portion 1903 through the opening 1917 of the base portion 1901 into the fastener mounts 1941 of the fixation plates 1940. As the fasteners 1942 are threadably turned with respect to the fiber routing portion 1903, the fixation plates 1940 are pulled toward the base portion 1901 to clamp the strength members between the clamping surfaces 1938 and 1945.

As noted previously, the fiber routing portion 1903 of the cable mount 1899 includes features for guiding individual fiber-carrying loose tubes to different desired directions as the fibers extend toward the front end of the cable mount 1899. The fiber routing portion 1903 defines cable management structures in the form of spools 1927 that are configured to guide the fiber carrying tubes to different desired directions without violating minimum bend requirements.

As shown, the spools 1927 may include flanges 1929 for retaining the fibers within the fiber routing portion 1903. A plurality of fiber channels 1959 are formed between the spools 1927. The flanges 1929 of the spools facilitate in keeping the fibers within desired fiber channels 1959.

As shown, the base portion 1901 may define walls 1997 at the front end to cooperate with the spools 1927 of the fiber routing portion 1903 for directing or guiding the fiber carrying tubes extending from the spools 1927 to different locations around a distribution element.

The fiber routing portion 1903, specifically the spools 1927, are designed to allow the fibers to be routed to different locations around an element or to different elements. The fiber routing portion 1903 is configured to allow the fiber carrying tubes to extend straight upwardly, straight downwardly, diagonally upwardly, diagonally downwardly, or straight through after passing through the channels 1959.

In the embodiment of the cable mount 1899 illustrated, the fiber routing portion 1903 is provided as a separate structure than the base portion 1901 of the cable mount 1899 and is mounted to the base portion 1901 with a snap-fit interlock. The two portions are provided as separate structures so that the base portion 1901 can be used with fiber routing portions that may have a different configuration than the fiber routing portion 1903 that is shown in Figures 86A-86C. The separability of the two portions 1901 and 1903 allows variability in the design of the fiber routing portion depending

upon the type of cable used. For example, the number and the structure of the spools 1927 can be varied depending upon the size and the number of the fibers of the clamped cable. Figures 87A-87C illustrate an example of a cable fixation device 1999 that has a different fiber routing portion 2013. In Figures 88A-88C, the cable fixation device 1999 of Figures 87A-87C is shown used with a cable wrap 2003 similar to the cable wrap 102 of Figure 16 that provides additional protection of the fiber breakouts extending from the cable mount 1999.

Referring now to Figures 83 and 83A, another version of a latch 1968 for latching the tray 1824 to the cover 1866 in the closed position is illustrated on element 1810. The latch 1968, which is provided as part of the tray 1824, includes a spring-loaded ball 1970 that is configured to be nested within notches or holes 1971 defined on the cover 1866 of each of the elements 1810. The notches or holes 1971 of the cover 1866 are shown in Figures 80-82. The spring-loaded ball 1970 is configured to keep the tray 1824 in a closed position. If a user applies enough force to overcome the tension of the spring pushing against the spring-loaded ball 1970, the user can slide the tray 1824 to an open position. The latch 1968, even though illustrated on an element such as element 1810, can be used on any of the versions of the elements discussed previously.

Yet another embodiment of a latch 2020 for keeping the tray of an element in a closed position is illustrated in Figures 89-91. The latch 2020 is shown as being used on an element similar to element 1810 of Figures 80-82. The latch 2020 is formed by a rib 2022 that is provided on the U-shaped radius limiter 1838. The rib 2022 interacts with a handle 2024 of the tray 1824 in keeping the tray 1824 in a closed position. When moving the tray 1824 toward an open position, the handle 2024 is simply forced over the rib 2022 or the rib 2022 is flexed slightly downwardly. As noted previously, the U-shaped radius limier 1838 is configured to be able to slide with respect to the chassis 1820 of the element 1810. The radius limiter 1838 moves in synchronized movement relative to the chassis and the tray 1824 to maintain fiber slack. The latch 2020 operates to keep the tray 1824 in a closed position by preventing relative separation between the tray 1824 and the radius limiter 1838. Since the tray 1824 and the radius limiter 1838 are configured to move simultaneously but with the tray 1824 moving at twice the speed of the radius limiter 1838, preventing relative separation between the tray 1824 and the

radius limiter 1838 keeps the entire slide mechanism, and thus the tray 1824, from moving.

Figure 89 illustrates the tray 1824 in a closed position, and Figure 90 illustrates the tray 1824 being moved from the closed position to an open position.

Now referring to Figure 91, the handle 2024 of the tray 1824 and the rib 2022 formed on the U-shaped radius limiter 1838 may include additional openings 2026 that are configured to align when the tray 1824 is in the closed position. The openings 2026 may be used to permanently or semi-permanently secure the tray 1824 in the closed position via attachment structures such as zip-ties, wires, etc.

Referring now to Figures 84 and 85, another example of a cable mount 2000 is illustrated as being attached to the sidewall of element 1810. The cable mount 2000 includes a Y-shaped body 2002 that defines an entrance trough 2004 and two oppositely-extending exit troughs 2006. The cable mount 2000 is shown as attached vertically to the sidewall 1812 of element 1810 via fasteners 2008 that are inserted into fastener mounts 2010 positioned toward the rear of the chassis of the element 1810.

A cable extending vertically within a telecommunications rack to which the element 1810 is mounted enters the entrance trough 2004 of cable mount 2000 and can lead either toward the front of the element 1810 or toward the rear of the element 1810 via the exit troughs 2006.

The body 2002 of the cable mount 2000 defines tabs 2012 at the sides of the entrance trough 2004 for pressing against the outer jackets of the cables to frictionally hold the cables mounted using the cable mount 2000. The tabs 2012 may also be provided along the sides of the exit troughs 2006.

The cable mount can be mounted to any of the elements 1810 along a vertical block depending upon where the vertical cable needs to be directed.

Referring now to Figures 98-100, an element similar to element 1810 shown in Figures 94-97 is illustrated. The element 1810 illustrated in Figures 98-100 includes a pair of cable management inserts 2110 that are configured for removable coupling to a frame member 2112 that is within the tray 1824 of element 1810. It should be noted that the inserts 2110 are provided as right and left inserts and are configured for mounting on the right and left sides of the frame member 2112 that is within the tray

1824 of element 1810. The inserts 2110 are configured as mirror images of each other, and, thus, the features of only the right insert 2110 will be described with the understanding that the discussed features are fully applicable to the left insert. The right and left inserts 2110 are shown in isolation in Figures 101-104.

The cable management insert 2110 is placed within the tray 1824 at a location between the sidewall of element 1810 and a connection or patch panel 2114 that includes a plurality of connection locations 2116. In the depicted embodiment, the connection locations 2116 of the panel 2114 are defined by fiber optic adapters 2118 (e.g., LC or SC format adapters). The connection locations 2116 are provided generally toward the middle of the tray 1824, and the adapters 2118 defining the connection locations 2116 are provided in a stacked arrangement from a rear end 2120 of the tray 1824 toward a front end 2122 of the tray 1824. The depicted adapters 2118 are stacked such that the adapter axes are generally perpendicular to a line that extends from the front end 2122 to the rear end 2120 of the tray 1824. Angled mounting can also be used, where the adapter axes are provided at an acute angle to a line that extends from the front end 2122 to the rear end 2120 of the tray 1824. The depicted adapters 2118 are mounted such that they define parallel axes, which can also be provided in the angled mounting configuration.

Still referring to Figures 98-104, the cable management insert 2110 defines a generally planar configuration with a front end 2124, a rear end 2126, a right side 2128, and a left side 2130. The cable management insert 2110 includes a plurality of radius limiters 2132 (e.g., spools) that are arranged from the front end 2124 to the rear end 2126 in a stacked arrangement. As shown in Figures 98-104, the radius limiters 2132 are designed to provide cable paths of differing lengths depending upon where the radius limiters 2132 are positioned with respect to the connection panel 2114, as will be discussed in further detail below.

As shown in Figures 98-100, when an element such as element 1810 includes a telecommunications device such as a fiber optic splitter 1900 that has been mounted to the exterior sidewall 1812 of the element (via a mounting bracket 2100 in the depicted example), cables 2134 extending from the fiber optic splitter 1900 lead into the U-Shaped radius limiter 1838 that is positioned toward the front of element 1810. The

fiber optic splitter 1900 is generally positioned adjacent the U-shaped radius limiter 1838 such that the inputs or outputs of the splitter 1900 are generally aligned with the entrance 1839 of the U-shaped radius limiter 1838. In this manner, cables 2134 extending from the fiber optic splitter 1900 can be managed by the radius limiter 1838 as the cables 2134 lead into or extend out of the tray 1824. As in the previous embodiments of the elements discussed, the U-shaped radius limiter 1838 is configured to be able to slide with respect to a chassis 1820 of the element 1810. The radius limiter 1838 moves in synchronized movement relative to the chassis 1820 and the tray 1824 to maintain fiber slack, without causing fibers extending from the splitter 1900 to be bent, pinched, or pulled.

The cable management insert 2110 discussed above provides the advantage of being able to use similar (or same) length cables or pigtails 2134 extending from a fiber optic splitter 1900 that has been mounted to the element 1810, even though each cable 2134 will be patched at a different point on the patch panel 2114. For example, a cable 2134 for connection to the frontmost adapter of the patch panel adapters 2118 might require a much longer cable length than a cable 2134 for connection to the rearmost adapter of the patch panel adapters 2118. The cable management insert 2110 is designed to provide an adjustment for the patching location of the cables 2134 while allowing all of the cables 2134 extending from a telecommunications device 1900 to be of a similar (or the same) length. With the radius limiters 2132 of the cable management insert 2110 defining cable paths of differing lengths, all of the cables 2134 extending from the splitter 1900 can be provided with a similar length. The different radius limiters 2132 accomplish the purpose of adjusting for the different patching locations of the cables 2134.

As shown in Figures 98-100, from the splitter 1900 to an entrance point 2135 on the tray 1824, a set length can be used for the cables 2134 without any issues. However, from the entrance point 2135 on the tray 1824 to each of the connection locations 2116, normally, different lengths (based on patching locations) might be necessary for the cables 2134 to avoid issues such as extra slack storage management, etc. The difference in path length between the entrance point 2135 of the tray 1824 and, for example, the frontmost adapter 2118 of the panel 2114 (long path) and the entrance

point 2135 of the tray 1824 and, for example, the rearmost adapter 2118 (short path) has to be compensated. The radius limiters 2132 compensate for these types of path length differences.

As illustrated in Figures 98-104, the radius limiter 2132 closest to the rear end 2126 of the insert 2132 defines a spool wall 2136 having a longer length than the rest of the radius limiters 2132 in the insert 2110. The front three radius limiters 2132 define spool walls having similar lengths to each other but shorter than that of the rearmost radius limiter 2132.

After passing through the U-shaped radius limiter 1838, as the cables 2134 branch out from the entrance point 2135 toward the adapters 2118 of the patch panel 2114, the cables 2134 are routed around the different radius limiters 2132 depending upon where they are going to be patched along the connection panel 2114. The cables 2134 extending toward the adapters 2118 positioned generally toward a rear 2138 of the patch panel 2114 are guided around the curved wall 2136 of the rearmost radius limiter 2132. These cables are initially routed toward the front 2122 of the tray 1824, around the wall 2136 of the rearmost radius limiter 2132, and then toward the rear 2120 of the tray 1824 to the associated adapters 2118. The cables 2134 extending toward the adapters 2118, positioned generally at a center 2140 of the connection panel 2114 and toward a front 2142 of the connection panel 2114, are guided around the front three radius limiters 2132, based upon the final patching location.

Each of the radius limiters 2132 define retention fingers 2144 extending from the spool walls 2136 thereof for retaining the cables 2134 around the spools 2132. As shown in Figures 98-100, the rightmost wall 2146 of the insert 2110 also defines retention fingers 2144 for keeping the cables 2134 within the insert 2110 as they are lead to the different radius limiters 2132.

Even though the depicted embodiment of the cable management insert 2110 is shown with radius limiters, wherein at least two of which define different spool wall lengths and thus, different cable path lengths, in other embodiments, more than two different types of spools 2132 can be provided on the insert 2110. For example, each of the front three radius limiters 2132 can have spool walls 2136 with differing lengths

from each other, to provide for a finer adjustment/accommodation for the final patching location of the cables 2134.

XXXXXXXXXXXXXXXXXXXXXXXXXXXXXXXXXXXXXXXXXX

Referring now to Figure 105, a frame member 2212 mountable within an element similar to the element 1810 shown in Figures 98-100 is illustrated. The frame member 2212 includes a pair of cable management inserts 2210 that are a different version of but, similar in configuration and function to, the cable management inserts 2110 illustrated in Figures 98-104. Figure 106 illustrates in isolation the cable management insert 2210 configured for mounting to a right side of the frame member 2212, and Figure 107 illustrates in isolation the cable management insert configured for mounting to a left side of the frame member of Figure 105.

As noted above, the cable management inserts 2210 share a similar configuration and functionality with the inserts 2110 of Figures 98-104. Since the right and left inserts 2210 are configured as mirror images of each other (similar to inserts 2110), when discussing the features of the inserts 2210, only the right insert 2210 will be referred to with the understanding that the discussed features are fully applicable to the left insert.

Similar to the version of the insert 2110, the cable management insert 2210 is placed within the frame member 2212 at a location between the sidewall of element 1810 and the connection panel 2114 that includes the plurality of connection locations 2116 toward the middle of the frame member 2212.

Similar to cable management insert 2110, the cable management insert 2210 defines a generally planar configuration with a front end 2224, a rear end 2226, a right side 2228, and a left side 2230. The cable management insert 2210 includes a plurality of radius limiters 2232 (e.g., spools) that are arranged from the front end 2224 to the rear end 2226 in a stacked arrangement. As discussed above, the radius limiters 2232 are designed to provide cable paths of differing lengths depending upon where the radius limiters 2232 are positioned with respect to the connection panel 2114.

The cable management insert 2210, as discussed previously for insert 2110, provides the advantage of being able to use similar (or same) length cables or pigtails extending from a fiber optic splitter 1900 that has been mounted to the element 1810,

even though each cable is patched at a different point on the patch panel 2114. The different radius limiters 2232 accomplish the purpose of adjusting for the different patching locations of the cables.

As illustrated in Figures 105-107 and as discussed above with respect to the version of the insert 2110, the radius limiter 2232 of insert 2210 closest to the rear end 2226 of the insert 2232 defines a spool wall 2236 having a longer length than the rest of the radius limiters 2232 in the insert 2210. The wall 2236 of the rearmost radius limiter 2232 includes an angled straight portion 2235 that transitions into a curved portion 2237 as the wall 2236 extends from the rear end 2226 toward the front end 2224 of the cable management insert 2210. The front three radius limiters 2232 define spool walls having similar lengths to each other but shorter than that of the rearmost radius limiter 2232.

As the cables branch out from the entrance point toward the adapters 2118 of the patch panel 2114, the cables are routed around the different radius limiters 2232 depending upon where they are going to be patched along the connection panel 2114. The cables extending toward the adapters 2118 positioned generally toward a rear of the patch panel 2114 are guided around the curved portion 2237 of the wall 2236 of the rearmost radius limiter 2232. These cables are initially routed toward the front of the frame member 2212, around the wall 2236 of the rearmost radius limiter 2232, and then toward the rear of the frame member 2212 to the associated adapters 2118. The cables extending toward the adapters 2118, positioned generally at a center of the connection panel 2114 and toward a front of the connection panel 2114, are guided around the front three radius limiters 2232, based upon the final patching location.

Each of the radius limiters 2232 define retention fingers 2244 extending from the spool walls 2236 thereof for retaining the cables around the spools 2232.

As shown in Figures 105-107, a rightmost wall 2246 defined by the insert 2210 also includes retention fingers 2244 extending inwardly therefrom for keeping the cables within the insert 2210 as they are lead to the different radius limiters 2232.

Even though the depicted embodiment of the cable management insert 2210 is shown with radius limiters, wherein at least three of which define different spool wall lengths and thus, different cable path lengths, in other embodiments, more than three different types of spools 2232 can be provided on the insert 2210. For example, each of

the front three radius limiters 2232 can have spool walls 2236 with differing lengths from each other, to provide for a finer adjustment/accommodation for the final patching location of the cables.

Parts List

10	element
12	block
20	chassis
24	tray
30	slide mechanism
32	gears
34	rack
36	entry points
38	radius limiters
50	mounting structure
52	adapters
56	T-shaped frame member
58	hinge
62	top frame member
64	bottom frame member
70	adapter blocks
72	connectors
74	cables
76	pathway
78	upper level
80	lower level
84	portion
86	flanges
90	radius limiters
96	openings
100	cable mount
102	cable wrap
106	radius limiters
210	element

220 chassis
224 tray
230 slide mechanism
238 radius limiters
256 frame members
258 hinges
260 middle portion
262 openings
264 side portions
266 cover
268 latches
270 radius limiters
276 pathway
278 upper level
280 lower level
284 radius limiters
286 cable mounts
288 dovetail
290 opening
292 block
294 bar
296 fasteners
310 element
330 slide mechanism
332 wheels
334 wire
336 wire
340 first part
342 second part
344 third part
410 element

420 radius limiter
430 friction members
500 universal mounting mechanism
502 universal mounting bracket
504 locking spring
506 release handle
508 cover
510 element
512 latch openings
514 front portion of the mounting bracket
516 mounting tabs
518 rear portion of the mounting bracket
520 bracket channel
522 deflection ramp
524 end portion of the locking spring
526 perpendicular locking face
528 angular insertion face
530 front end
532 inner front face
534 grip portion
536 deflection tab
538 rear end of the release handle
540 positive stop
542 stop face
544 slide mechanism
545 fasteners
610 element
620 chassis
621 inner end of radius limiter
623 outer end of radius limiter
624 tray

625 divider
627 trough
629 trough
631 cable management tab
633 cable management tab
635 cable management finger
638 radius limiter
676 pathway
678 upper level
680 lower level
684 cable guide
690 top surface of an element
692 bottom surface of an element
694 right side
696 left side
700 mounting system
701 first locking feature
702 stud
703 second locking feature
704 slot
705 third locking feature
706 slide lock
708 stem portion
710 flange portion
712 receiver portion
714 retention portion
716 end
718 lower cutout
720 lower side edge
722 upper cutout
724 upper side edge

726 bottom notch of lower cutout
728 side notch of lower cutout
730 top botch of upper cutout
732 side notch of upper cutout
734 opening
736 flexible cantilever tab
810 element
811 cover
813 cover
815 rear portion
821 aperture
824 tray
825 divider
827 trough
829 trough
838 U-shaped radius limiter
858 hinge
876 S-shaped pathway
878 upper level
880 lower level
884 portion of S-shaped pathway
890 top surface of element
892 bottom surface of element
894 right side of element
896 left side of element
897 opening
900 mounting system
901 first locking feature
902 stud
903 second locking feature
904 slot

905 third locking feature
906 slide lock
908 stem portion
910 flange portion
912 receiver portion
914 retention portion
916 end surface
918 cantilever arm
920 stop surface
922 flex surface
924 lower front edge
956 frame member
957 opening
960 middle portion
962 opening
964 side portion
970 radius limiter
1056 frame member
1156 frame member
1160 middle portion
1256 frame member
1260 center portion
1261 front portion
1263 splice region
1265 cover
1356 frame member
1357 flip-tray
1359 radius limiter
1361 right side
1363 left side
1387 splitter

1456 frame member
1457 flip-tray
1458 splice region
1459 radius limiter
1460 center portion
1556 base portion
1560 middle portion
1562 opening
1564 side portion
1569 modular element
1570 radius limiter
1590 hook
1591 first side
1592 first edge
1593 catch
1594 second side
1595 second edge
1656 frame member
1669 modular element
1671 splice region
1756 frame member
1810 element
1811 opening
1812 side wall
1814 front face
1820 chassis
1824 tray
1838 U-shaped radius limiter
1839 entrance of U-shaped radius limiter
1862 locking feature
1864 slide lock

1866 cover
1867 receiving portion
1868 dovetail receiver
1869 retention portion
1899 cable fixation device/clamp/mount
1900 fiber optic splitter
1900a small footprint fiber optic splitter
1900b medium footprint fiber optic splitter
1900c another embodiment of a fiber optic splitter
1901 base portion
1903 fiber routing portion
1905 cantilever finger
1907 tab
1909 slot
1911 cantilever arm
1913 ramped tab
1915 catch
1917 opening
1919 fastener mount
1920 jacket channel
1921 pocket
1924 strength member pocket
1927 spool
1929 flange
1931 upper transverse wall
1933 lower transverse wall
1935 divider wall
1936 strength member clamp
1937 opening
1938 clamping surface
1940 fixation plate

1941 fastener mount
1942 fastener
1943 opening
1945 clamping surface
1959 fiber channel
1963 throughhole
1968 latch
1970 spring-loaded ball
1971 notch/hole
1987 ramp
1997 wall
1999 cable fixation device/clamp/mount
2000 cable mount
2002 body
2003 cable wrap
2004 entrance trough
2006 exit trough
2008 fastener
2010 fastener mount
2012 tab
2013 fiber routing portion
2020 latch
2022 rib
2024 handle
2026 opening
2028 opening
2100 mounting bracket
2102 upper wall
2104 lower wall
2106 finger extension
2108 ramped tab

2110 cable management insert
2112 frame member
2114 connection/patch panel
2116 connection location
2118 fiber optic adapter
2120 rear end of tray
2122 front end of tray
2124 front end of cable management insert
2126 rear end of cable management insert
2128 right side
2130 left side
2132 radius limiter/spool
2134 cable/pigtail
2135 entrance point of the tray
2136 spool wall
2138 rear of patch panel
2140 center of patch panel
2142 front of the patch panel
2144 cable retention fingers
2146 rightmost wall of cable management insert
XXXXXXXXXXXXXXXXXXXXXXXXXXXXXXXXXXXXXXXXXXXXXXXXXXXXXXXXX
2210 cable management insert
2212 frame member
2224 front end of cable management insert
2226 rear end of cable management insert
2228 right side
2230 left side
2232 radius limiter/spool
2235 angled straight portion of spool wall
2236 spool wall
2237 curved portion of spool wall

2244 cable retention fingers

2246 rightmost wall of cable management insert

What is claimed is:

1) An optical fiber distribution element (1810) comprising:

a chassis (1820);

an optical device (1900) mounted to the chassis (1820), the optical device (1900) including a plurality of cables (2134) extending from the optical device (1900) into the chassis (1820); and

a cable management device (2110/2210) mounted to the chassis (1820), the cable management device (2110/2210) including a plurality of radius limiters in the form of spools (2132/2232) in a stacked arrangement for managing the cables (2134) extending from the optical device (1900) for further connection within the chassis (1820), wherein a first of the spools (2132/2232) defines a spool wall (2136/2236) having a different wall length than that of a second of the spools (2132/2232), wherein a first of the plurality of cables (2134) is routed around the first of the spools (2132/2232) and a second of the plurality of cables (2134) is routed around the second of the spools (2132/2232) that has a different spool wall length than that of the first of the spools (2132/2232).

2) An optical fiber distribution element (1810) according to claim 1, wherein the optical device (1900) is a fiber optic splitter.

3) An optical fiber distribution element (1810) according to claim 1, wherein the cable management device (2110/2210) is provided as an insert that is removably mounted within the chassis (1820).

4) An optical fiber distribution element (1810) according to claim 1, wherein the optical device (1900) is mounted with a mounting bracket (2100) that slidably latches to the chassis (1820), wherein the mounting bracket (2100) removably receives the optical device (1900) with a snap-fit interlock.

5) An optical fiber distribution element (1810) according to claim 1, wherein the chassis (1810) includes a plurality of connection locations (2116) defined by fiber optic adapters (2118) for patching the cables (2134) extending from the optical device (1900).

6) An optical fiber distribution element (1810) comprising:

a chassis (1820);

a tray (1824) slidably mounted to the chassis (1820), the tray (1824) movable between a closed position and an open position;

an optical device (1900) mounted to the chassis (1820), the optical device (1900) including a plurality of cables (2134) extending from the optical device (1900) into the tray (1824) of the chassis (1820);

a first cable management device (2110/2210) mounted within the tray (1824), the cable management device (2110/2210) including a plurality of radius limiters in the form of spools (2132/2232) in a stacked arrangement for managing the cables (2134) extending from the optical device (1900) for further connection within the tray (1824), wherein a first of the spools (2132/2232) defines a spool wall (2136/2236) having a different wall length than that of a second of the spools (2132/2232), wherein a first of the plurality of cables (2134) is routed around the first of the spools (2132/2232) and a second of the plurality of cables (2134) is routed around the second of the spools (2132/2232) that has a different spool wall length than that of the first of the spools (2132/2232); and

a second cable management device (1838) for guiding the cables (2134) from the optical device (1900) to the first cable management device (2110/2210), wherein the second cable management device (1838) is configured to move in synchronized movement relative to both the chassis (1820) and the tray (1824) to maintain fiber slack.

7) An optical fiber distribution element (1810) according to claim 6, wherein the second cable management device (1838) is configured to move at half the linear speed of the tray (1824) with respect to the chassis (1820).

8) An optical fiber distribution element (1810) according to claim 6, wherein the first cable management device (2110/2210) is provided as an insert that is removably mounted within the tray (1824).

9) An optical fiber distribution element (1810) according to claim 6, wherein the optical device (1900) is a fiber optic splitter.

10) An optical fiber distribution element (1810) according to claim 6, wherein the optical device (1900) is mounted with a mounting bracket (2100) that slidably latches to the chassis (1820), wherein the mounting bracket (2100) removably receives the optical device (1900) with a snap-fit interlock.

11) An optical fiber distribution element (1810) according to claim 6, wherein the chassis (1820) includes a plurality of connection locations (2116) defined by fiber optic adapters (2118) for patching the cables (2134) extending from the optical device (1900).

12) A cable management device (2110/2210) for managing a plurality of cables (2134) extending between two connection points on a fiber optic chassis (1820), the cable management device (2110/2210) comprising:

a plurality of radius limiters defined by spools (2132/2232) arranged in a stacked arrangement, each spool (2132/2232) including a wall (2136/2236) defining a wall length that extends between a first end (2128/2228) and a second opposite end (2130/2230) of the cable management device (2110/2210), wherein a first of the spools (2132/2232) defines a spool wall length that is different than that of a second of the spools (2132/2232).

13) A cable management device (2110/2210) according to claim 12, further comprising a plurality of cable retention fingers (2144/2244) extending from each of the spool walls (2136/2236).

14) A method of managing a plurality of the same length cables (2134) extending from an optical device (1900) toward connection locations (2116) within a telecommunications fixture (1820) on which the optical device (1900) is mounted, the method comprising:

- routing at least two of the cables (2134) around two different radius limiters that are defined by spools (2132/2232) provided in a stacked arrangement, each spool (2132/2232) of the two defining a spool wall (2136/2236) having a different wall length than the other for defining a different length cable path from the optical device (1900) to the connection locations (2116).

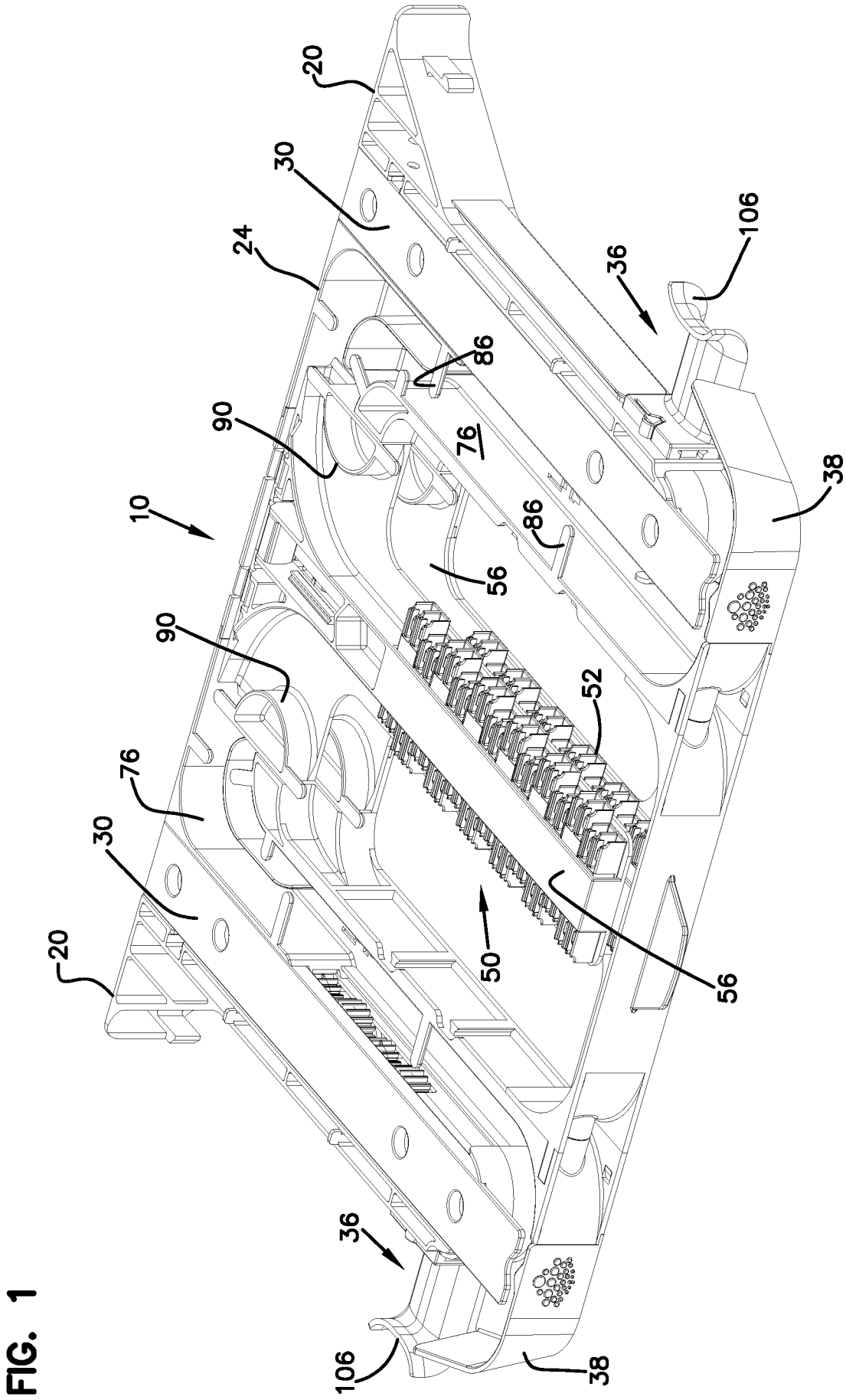

FIG. 1

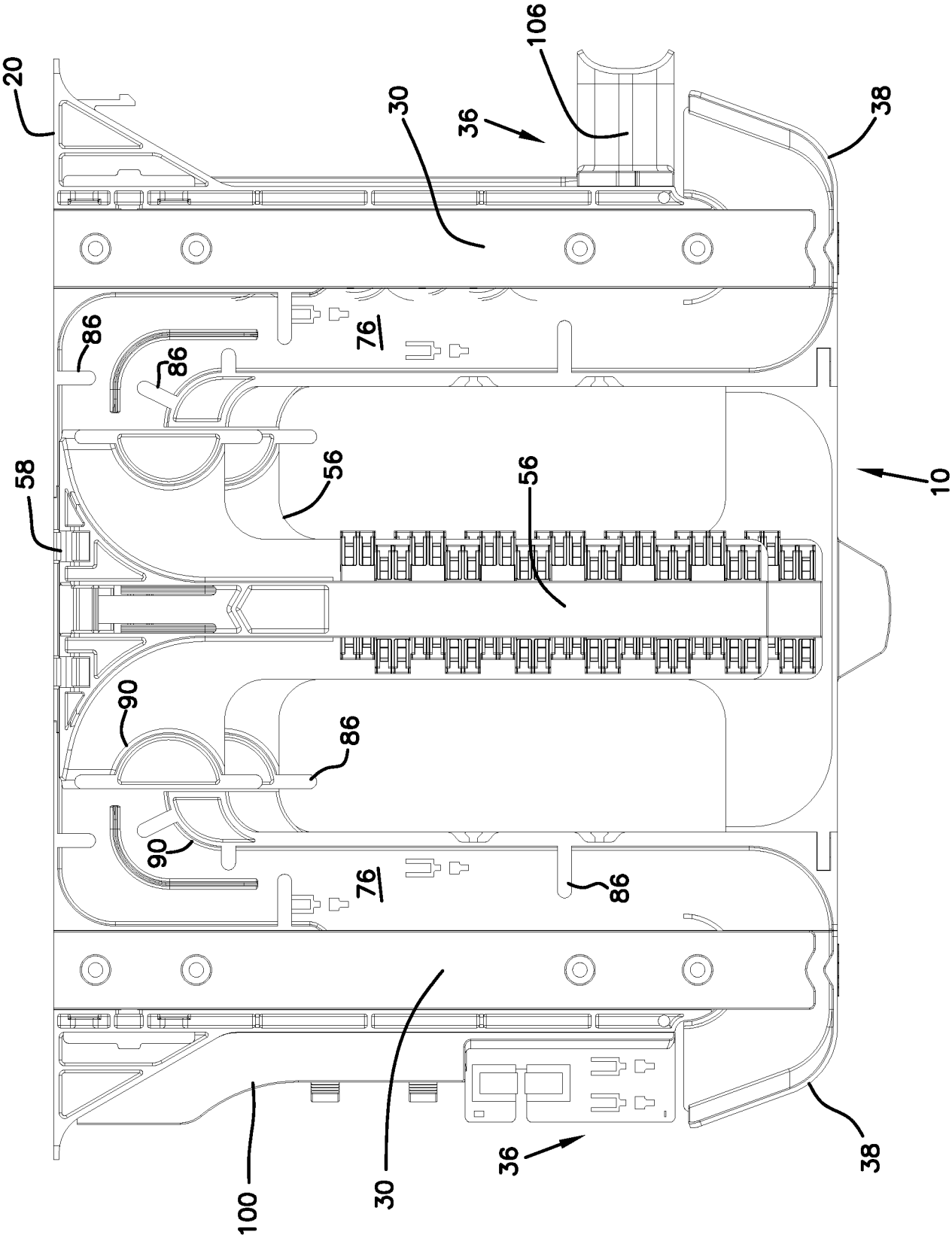

FIG. 2

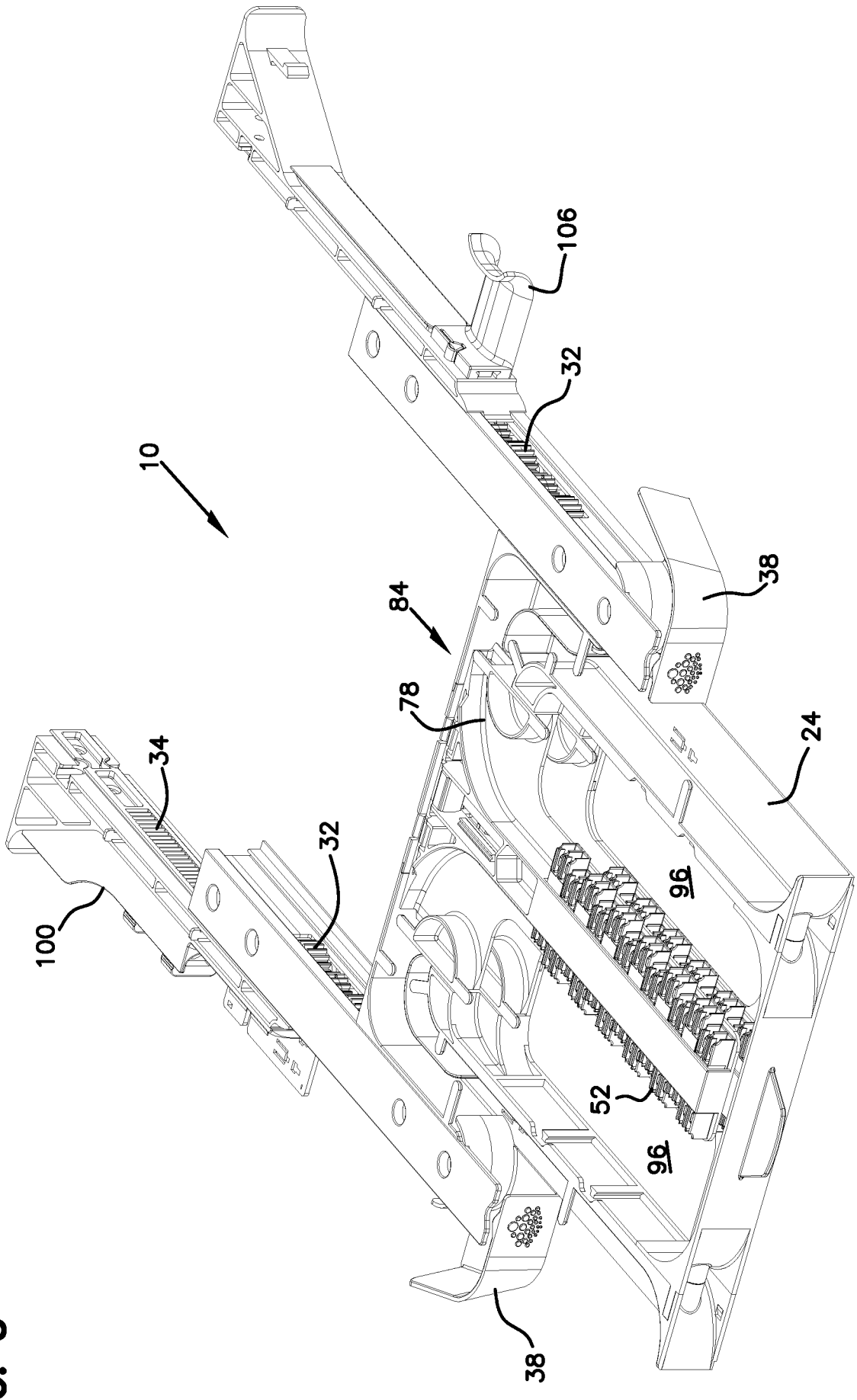

FIG. 3

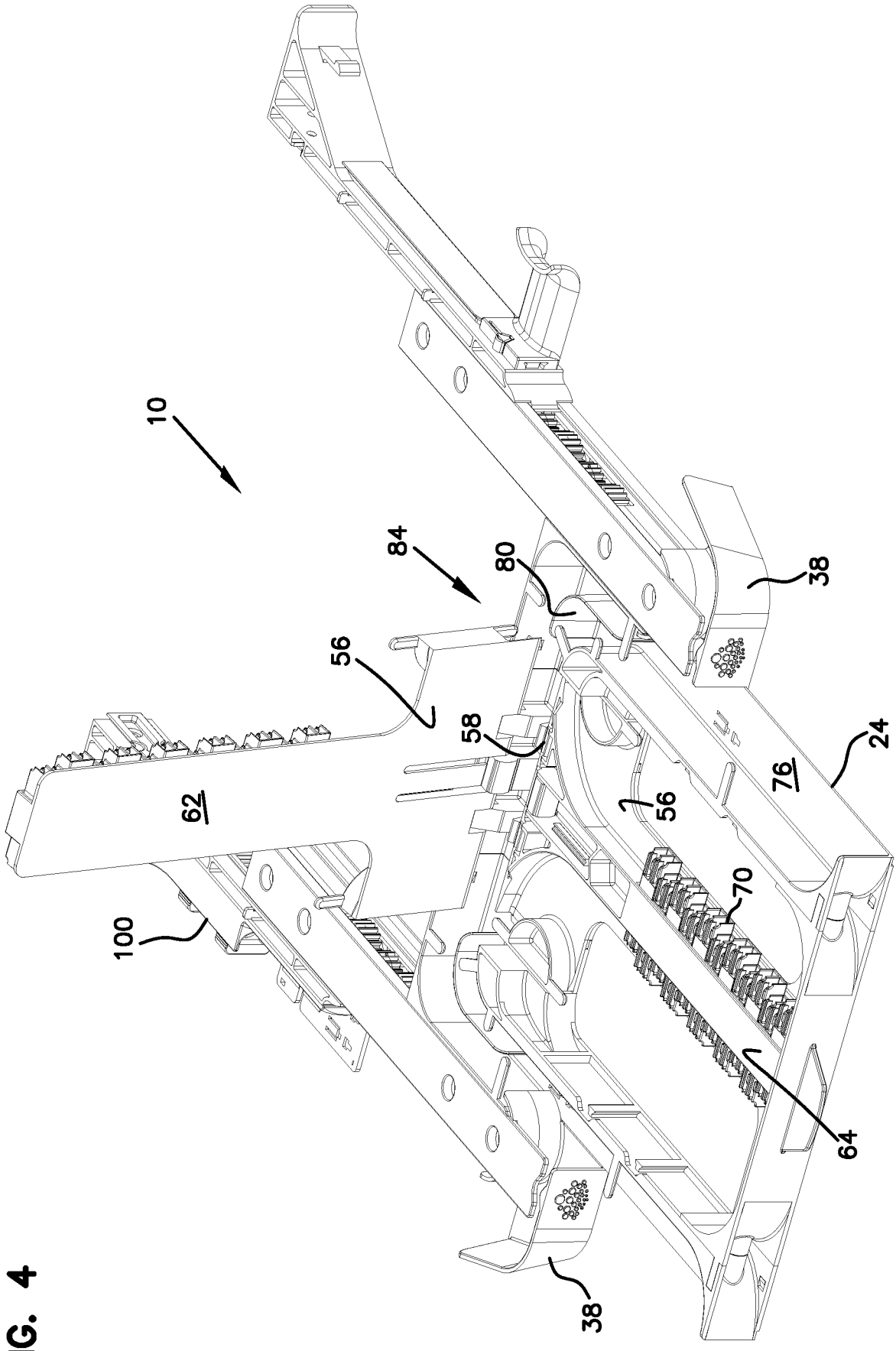

FIG. 4

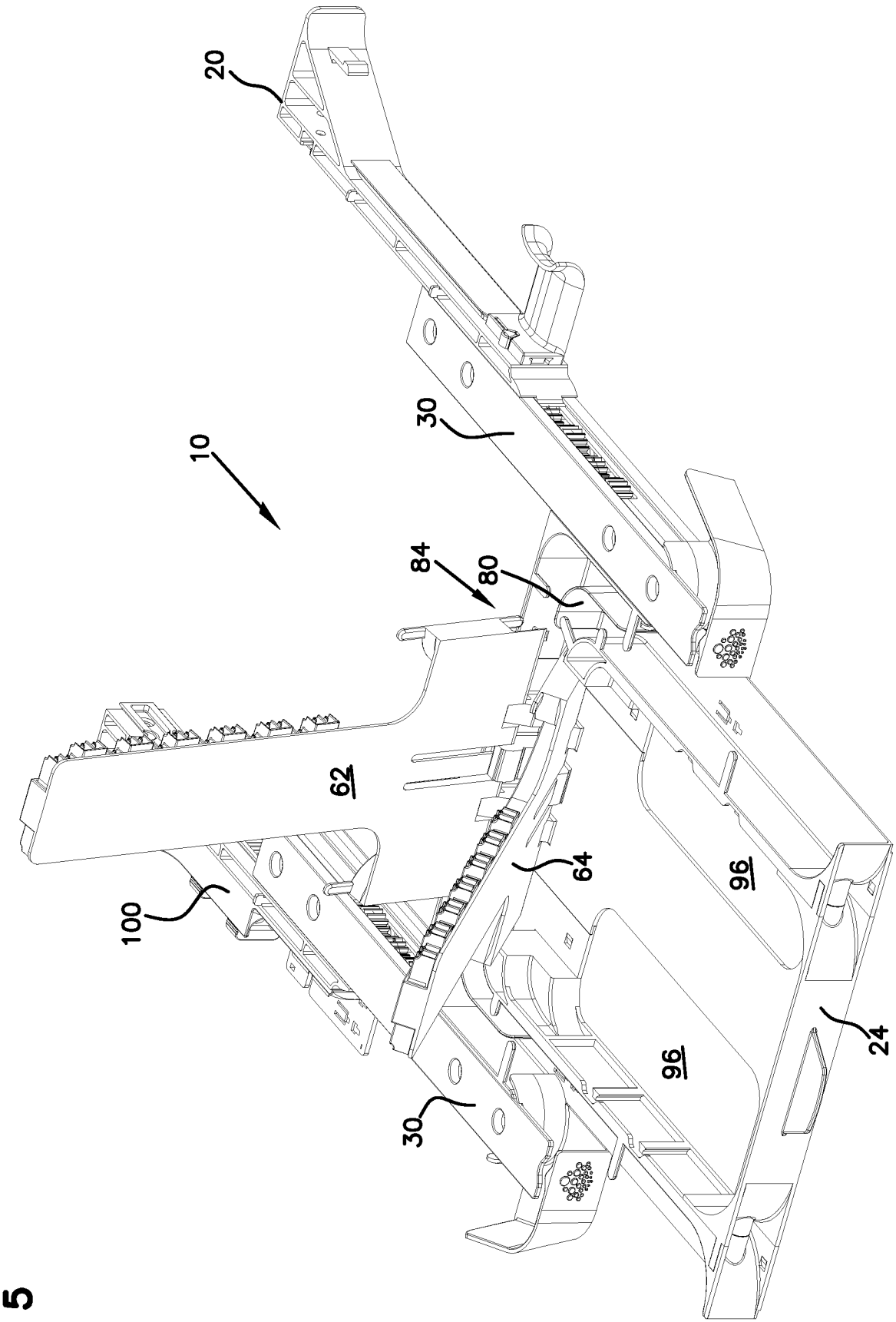

FIG. 5

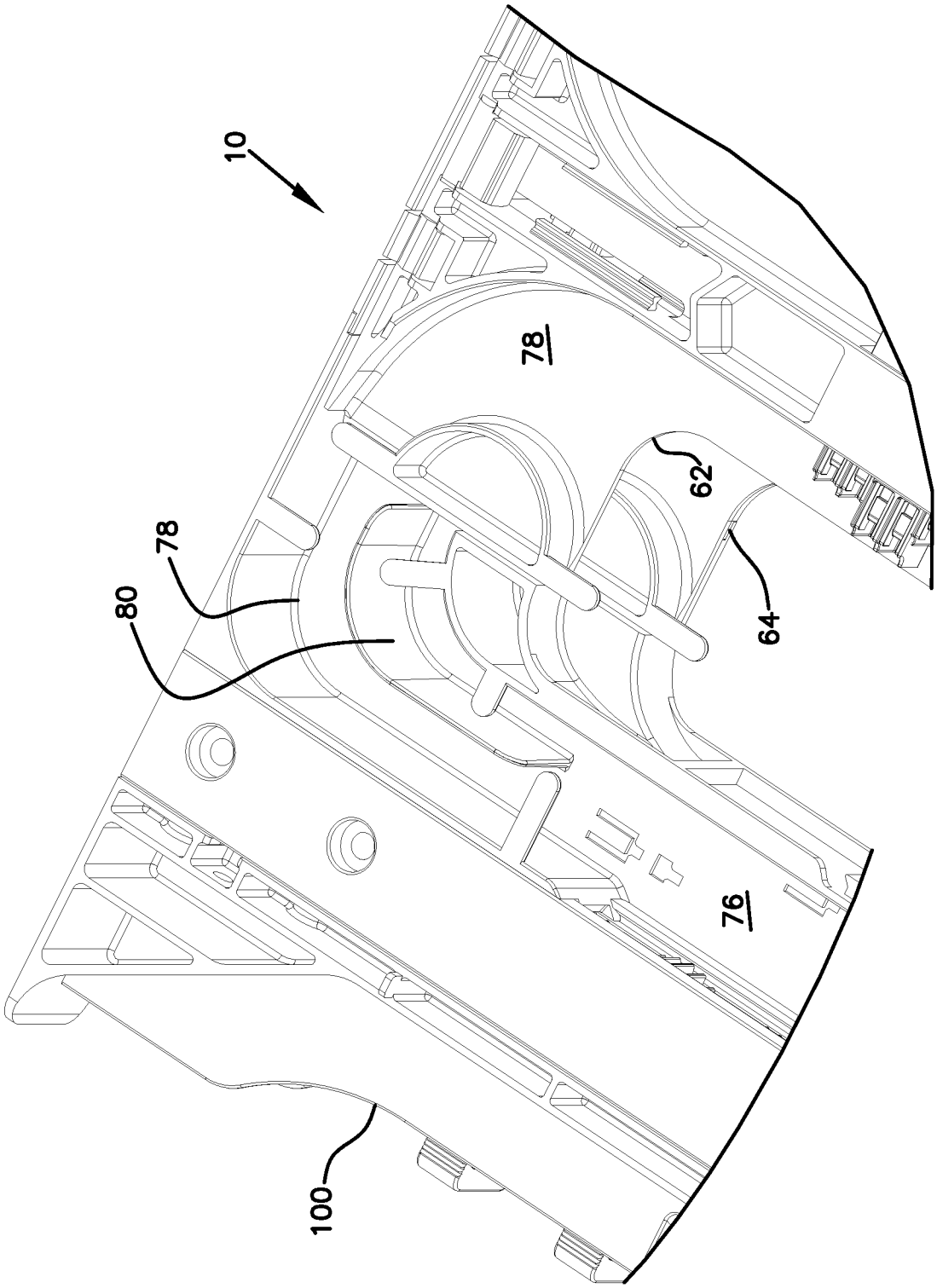

FIG. 6

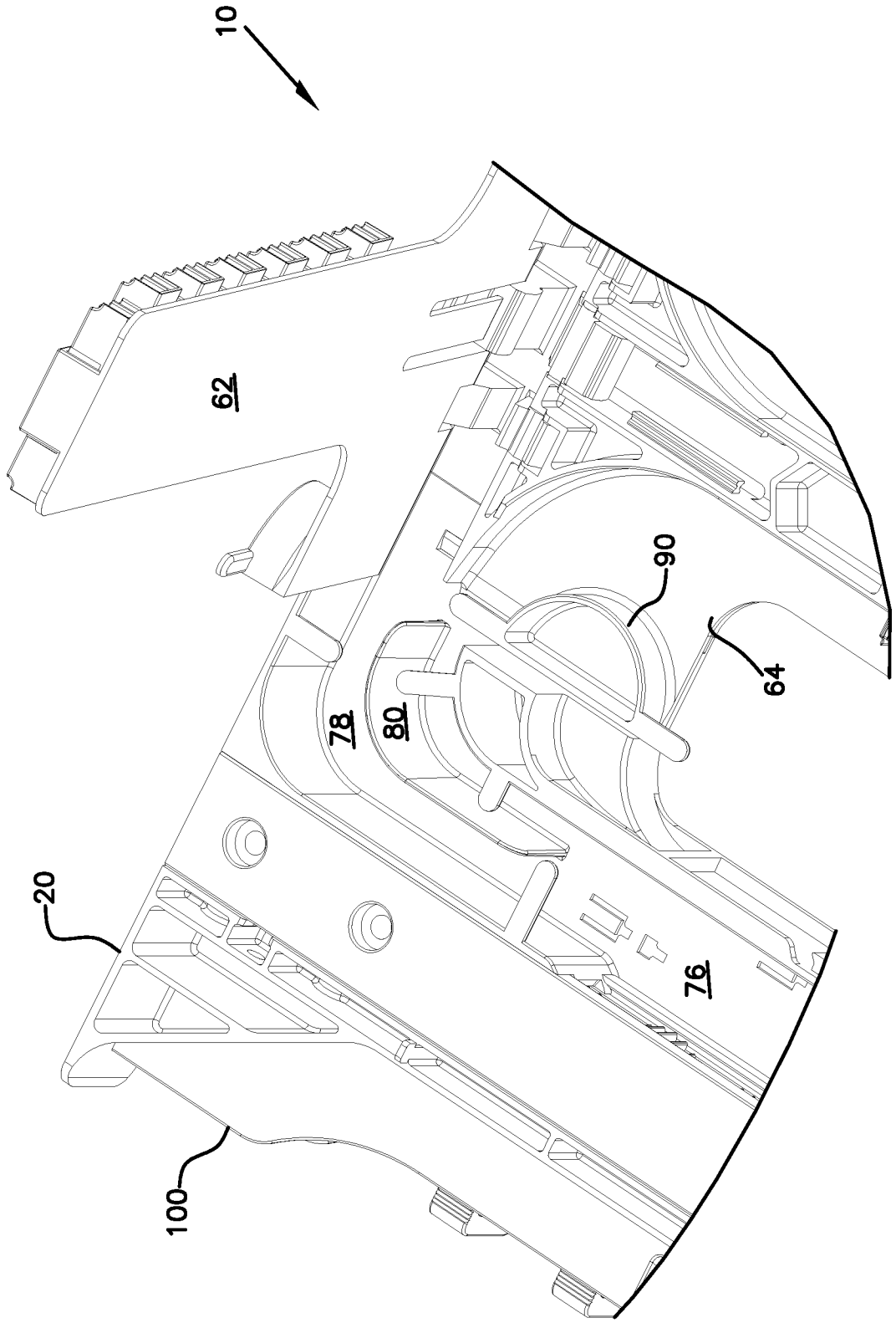

FIG. 7

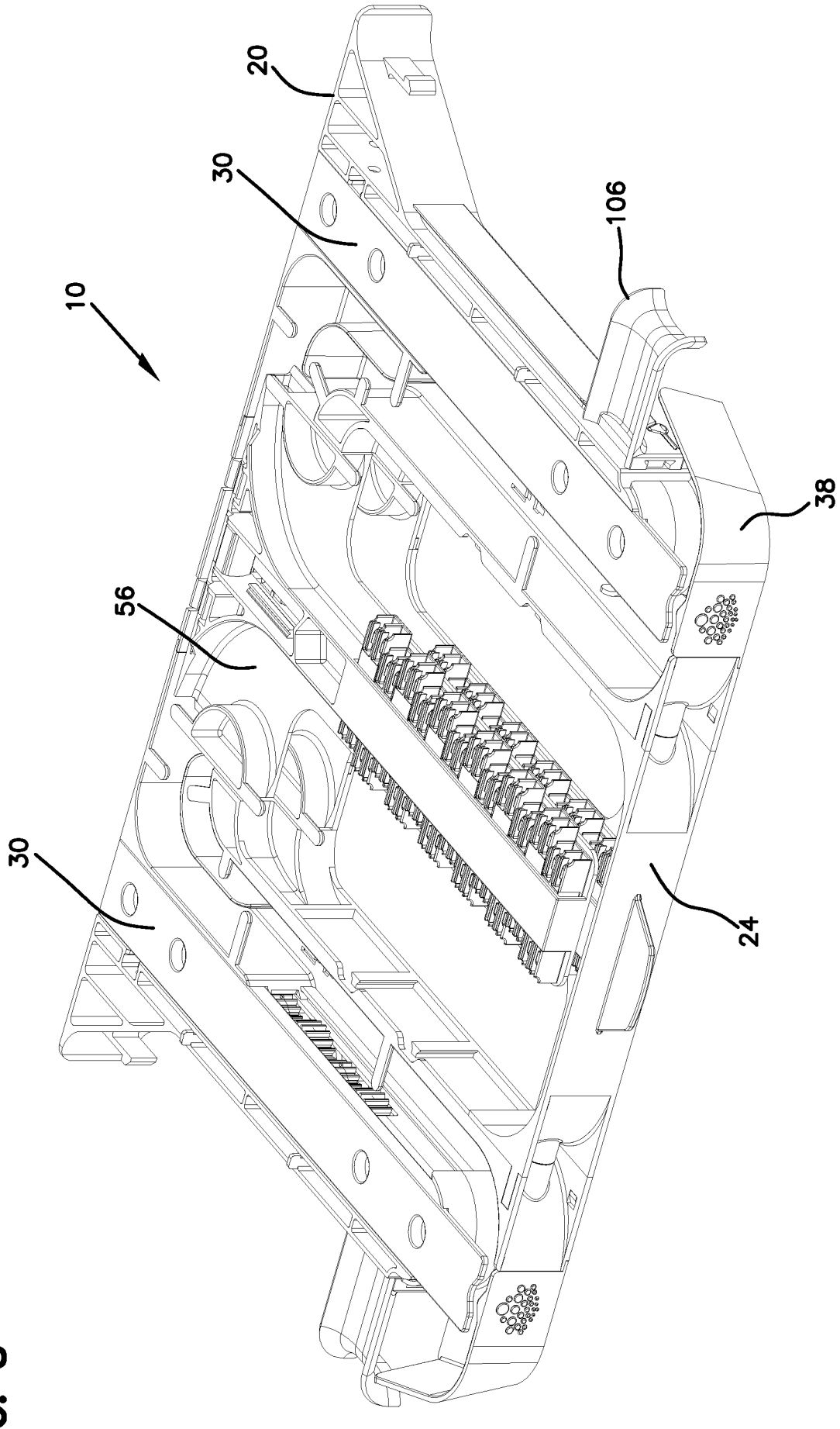

FIG. 8

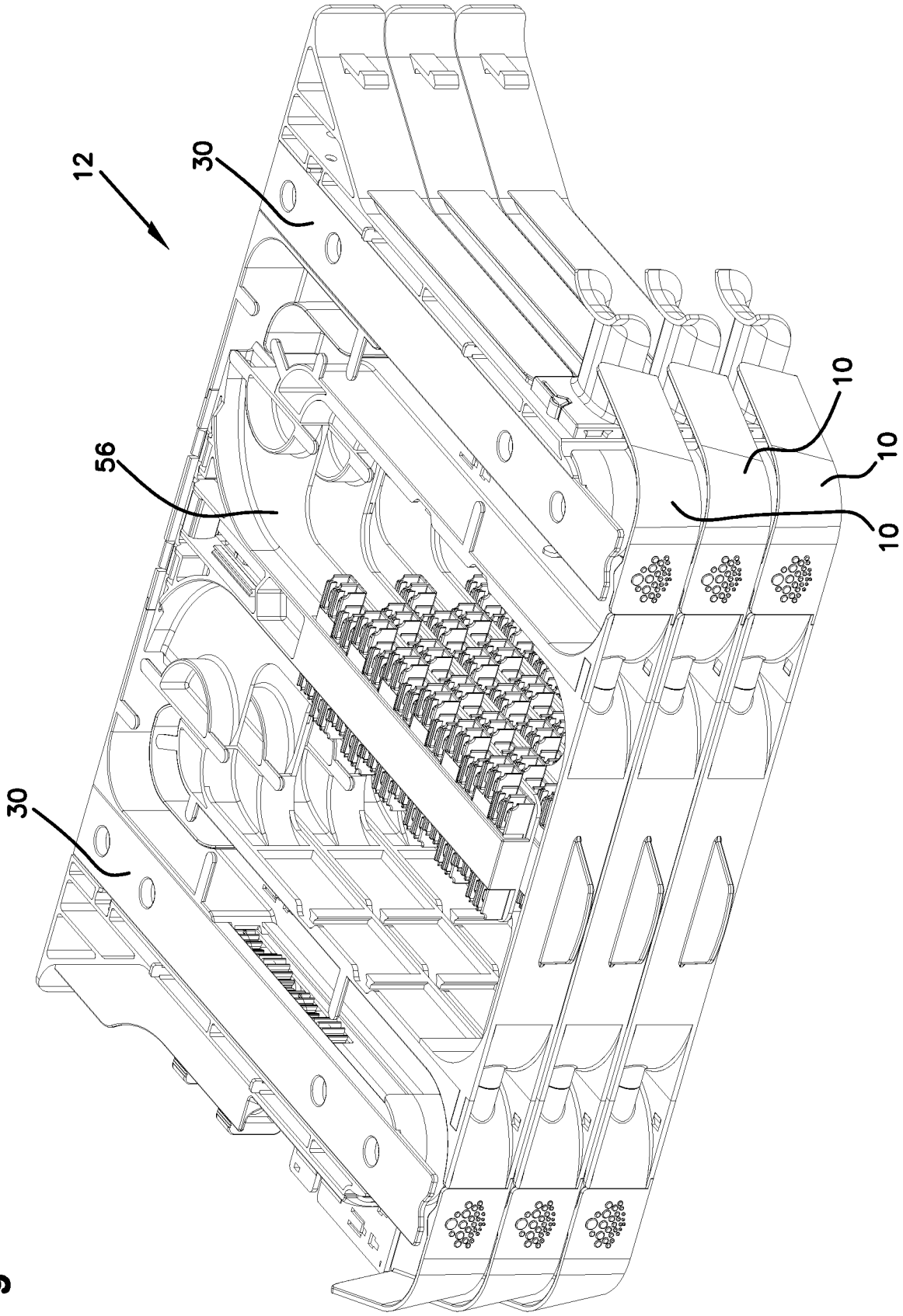

FIG. 9

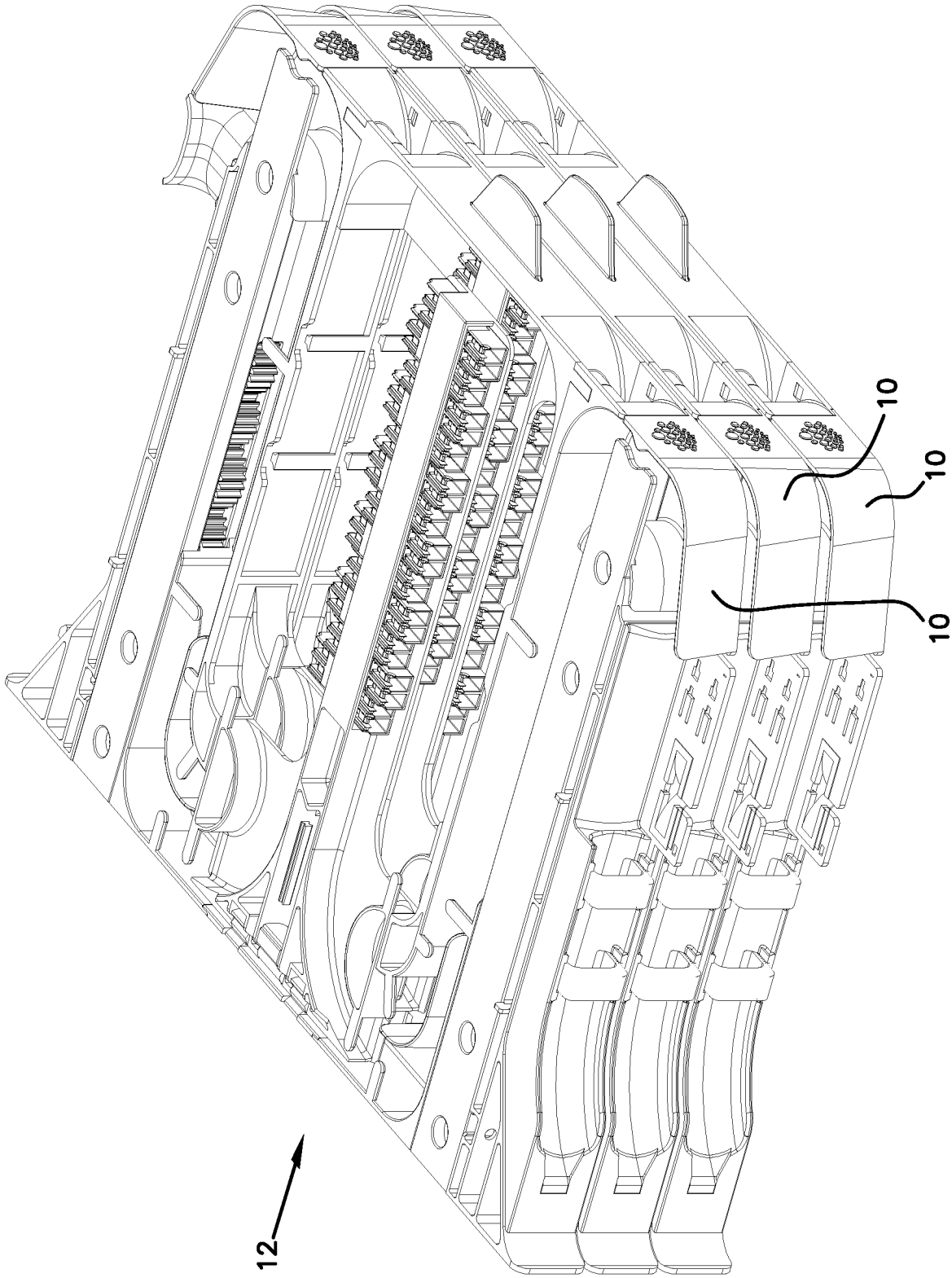

FIG. 10

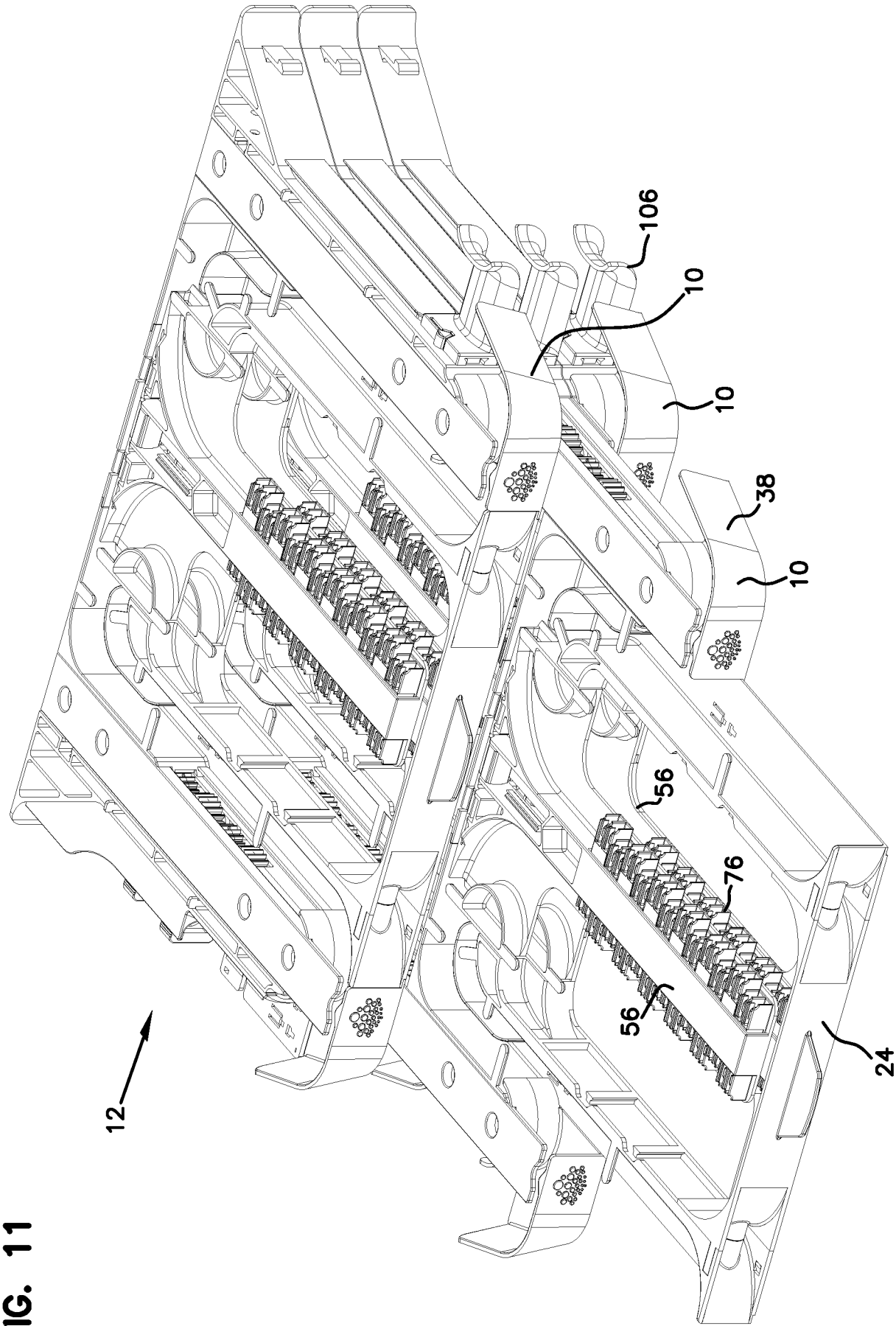

FIG. 11

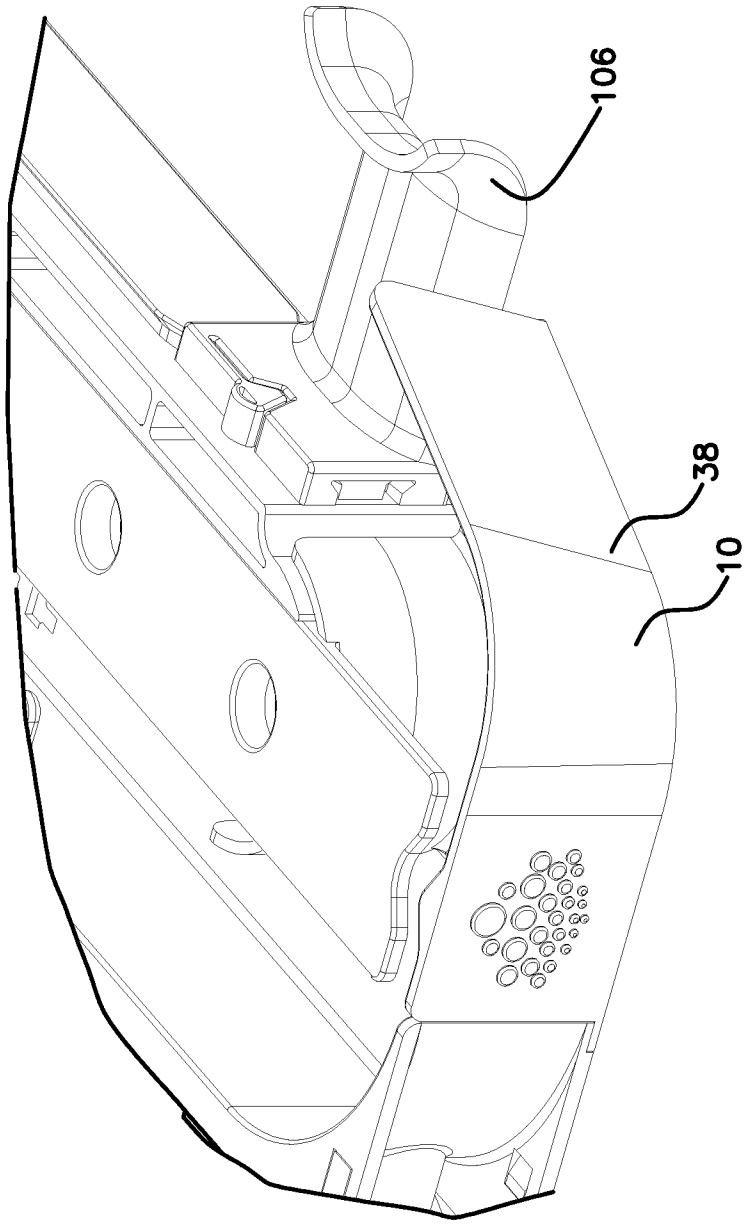

FIG. 12

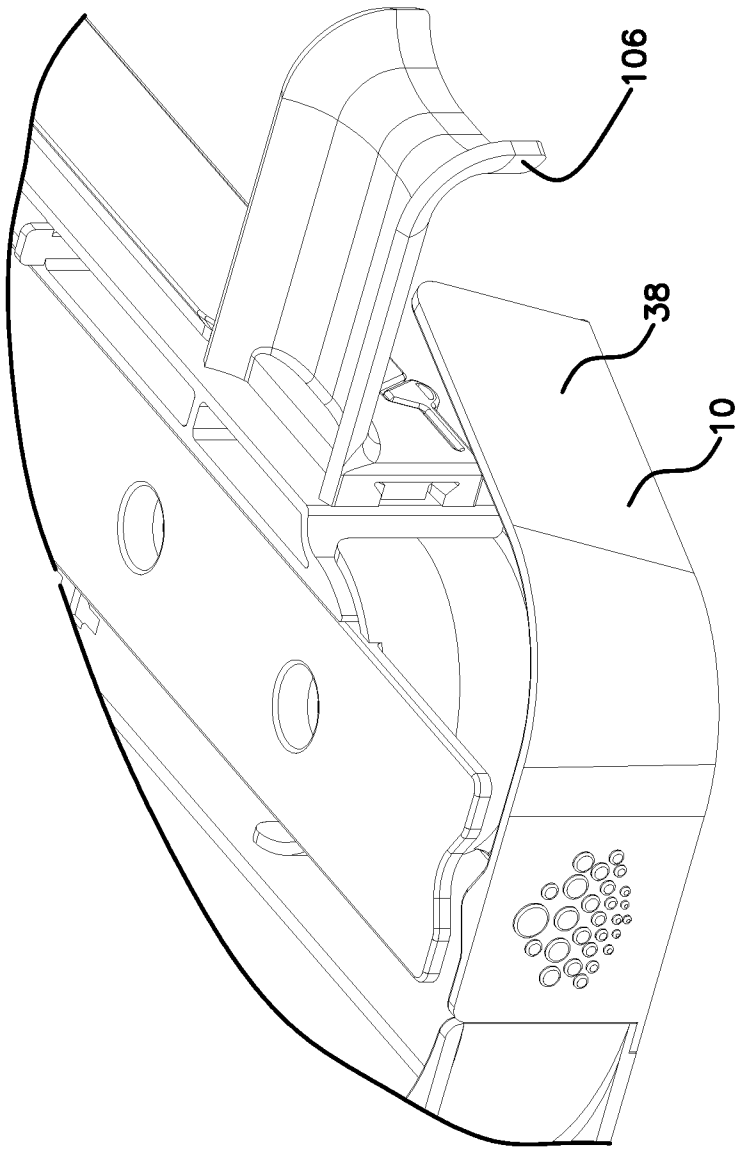

FIG. 13

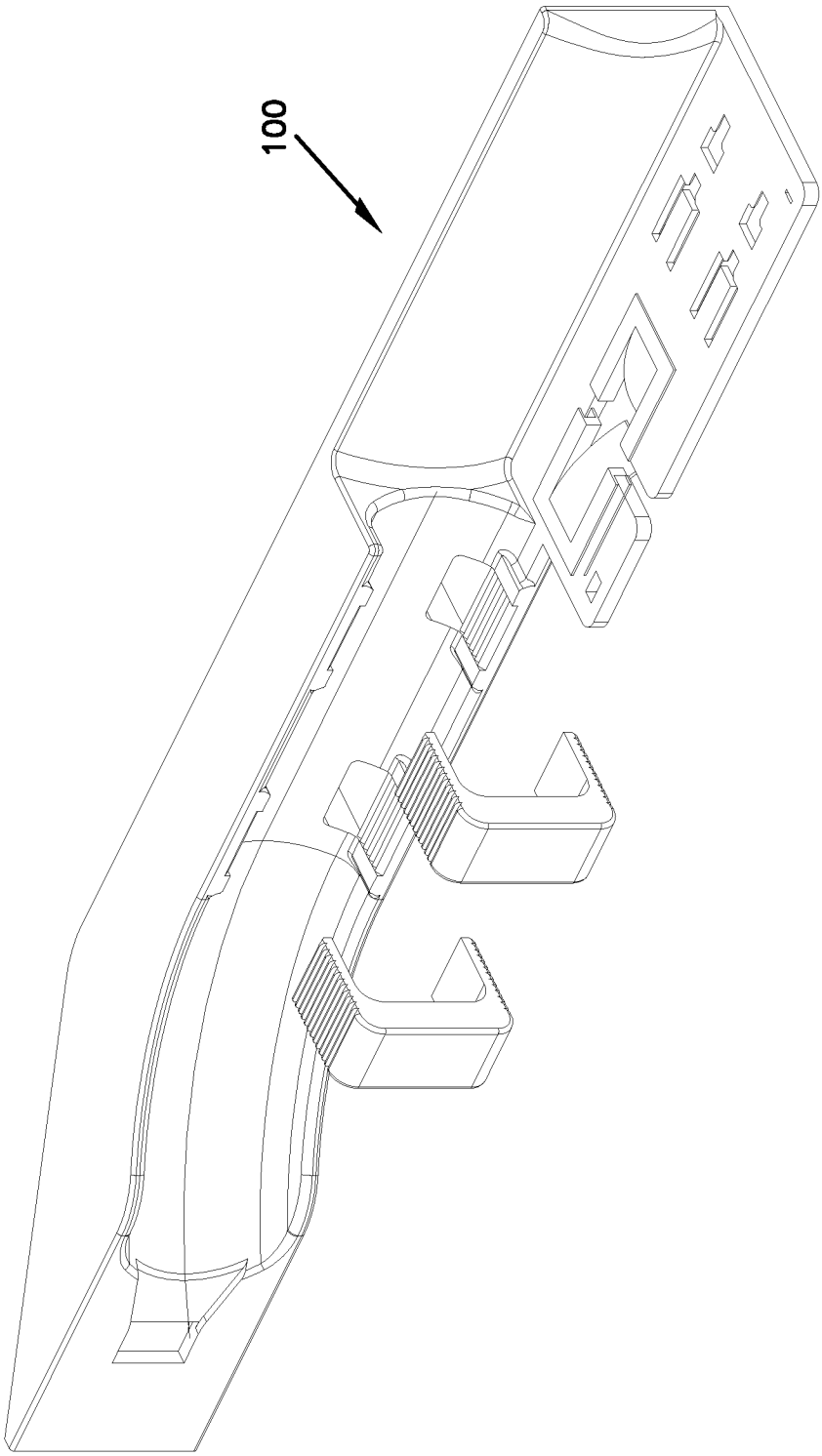

FIG. 14

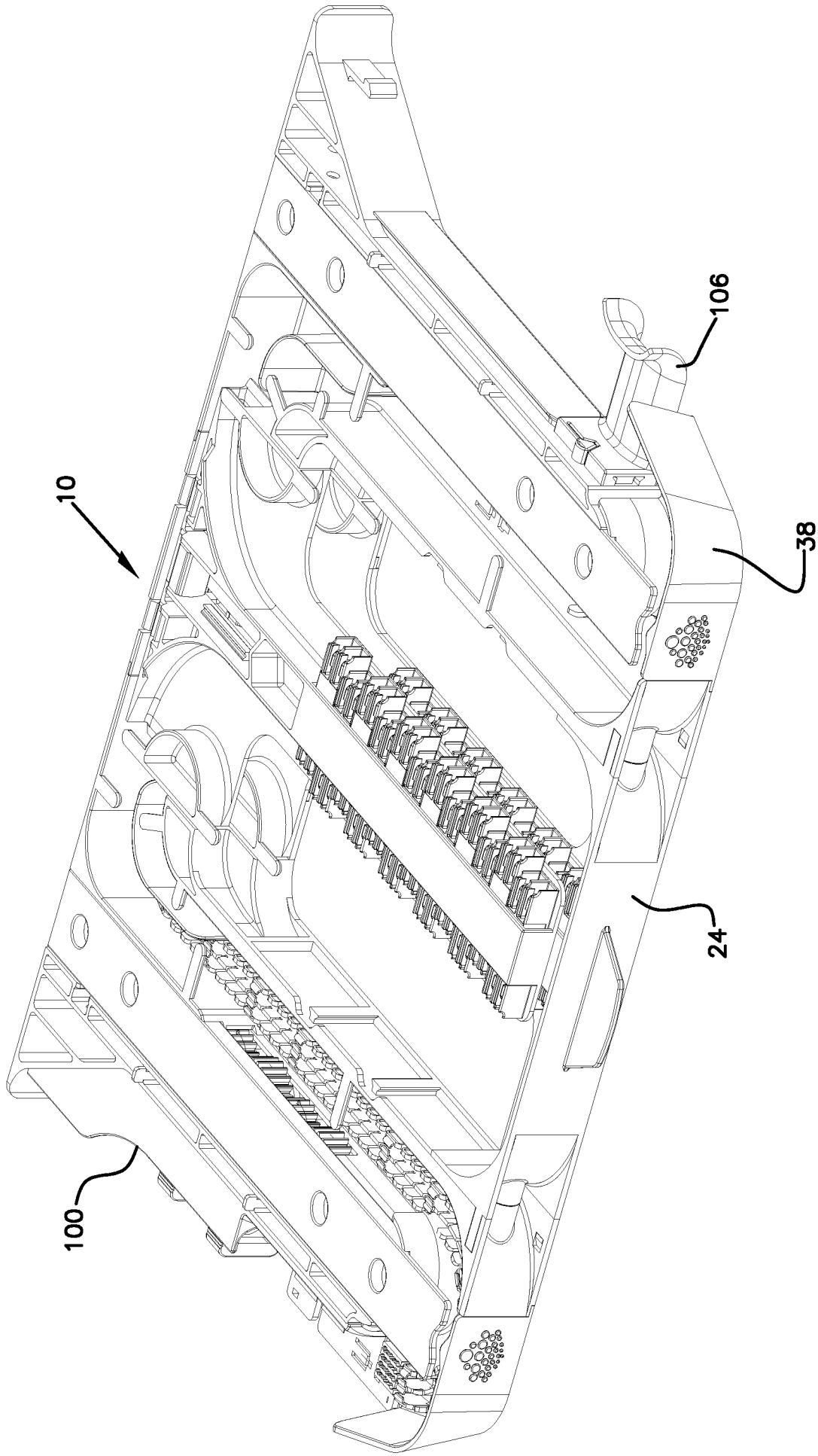

FIG. 15

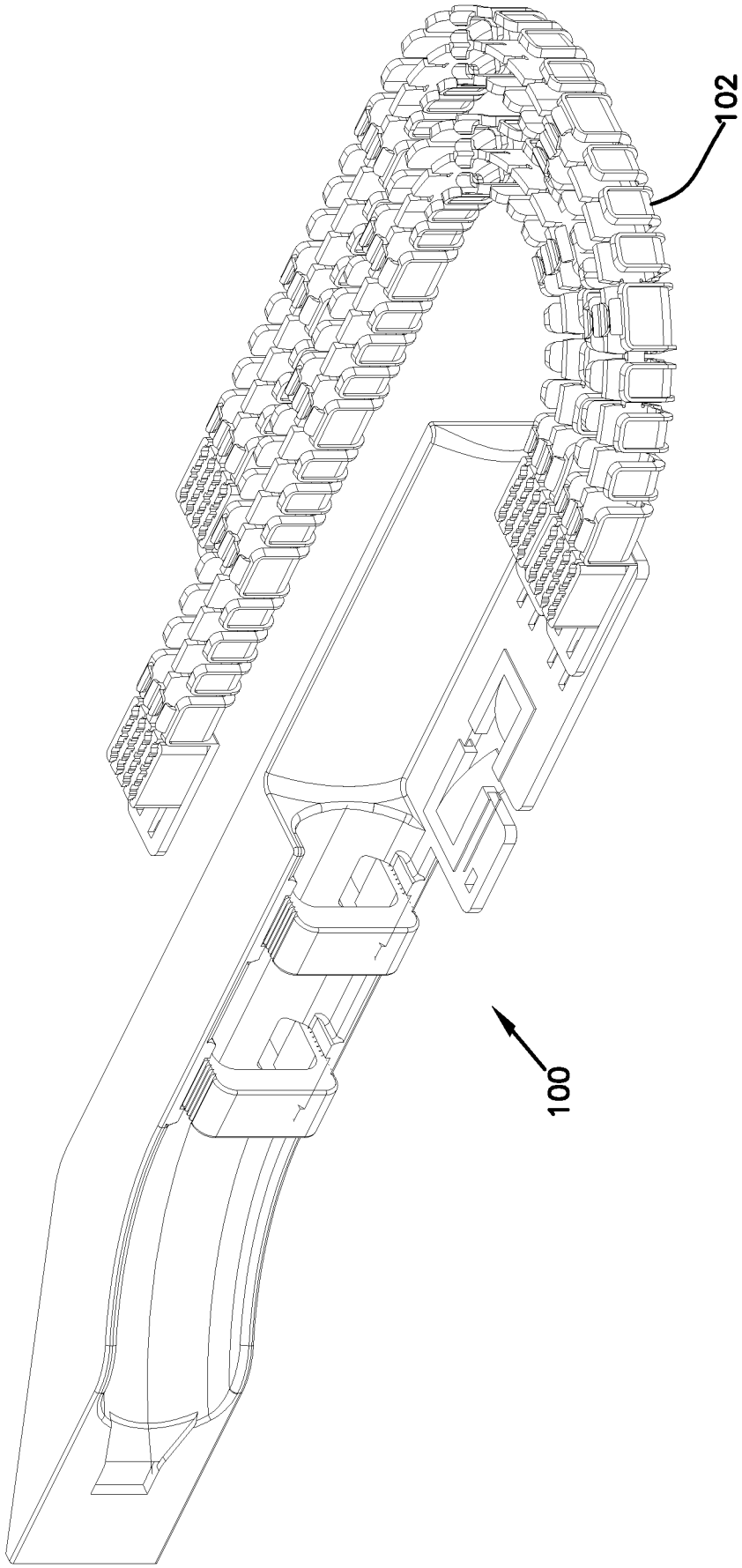

FIG. 16

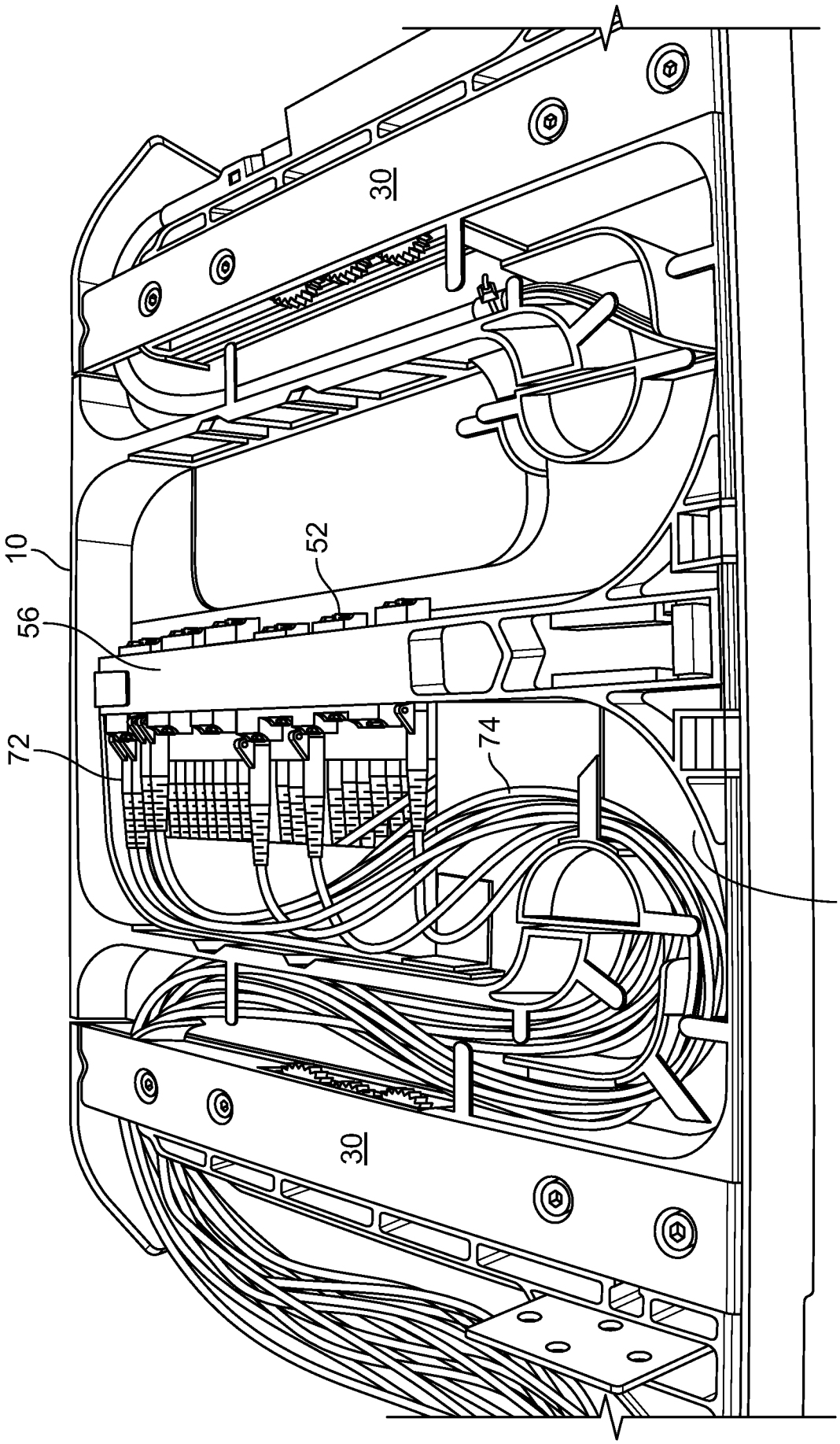

FIG. 17

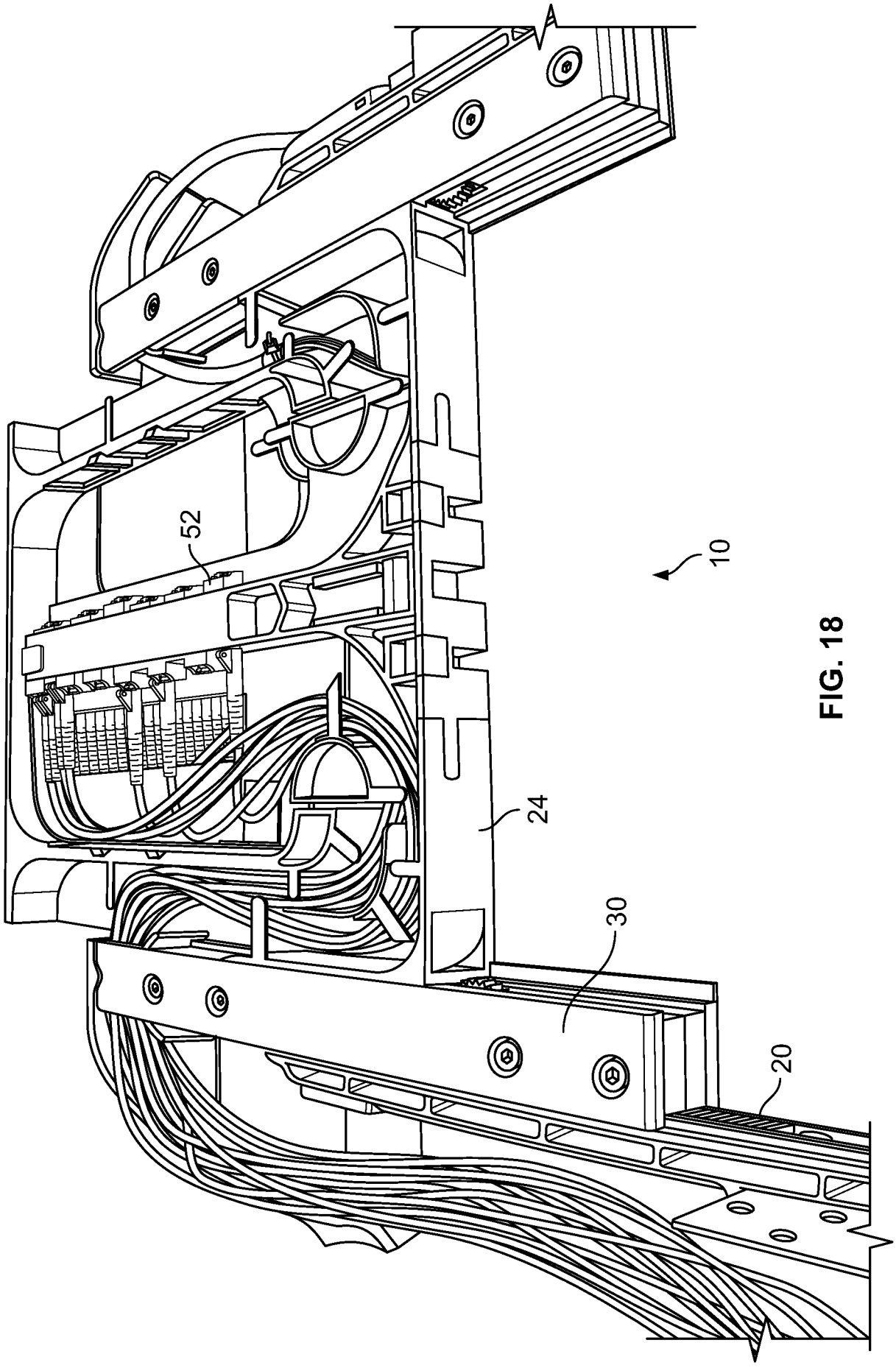

FIG. 18

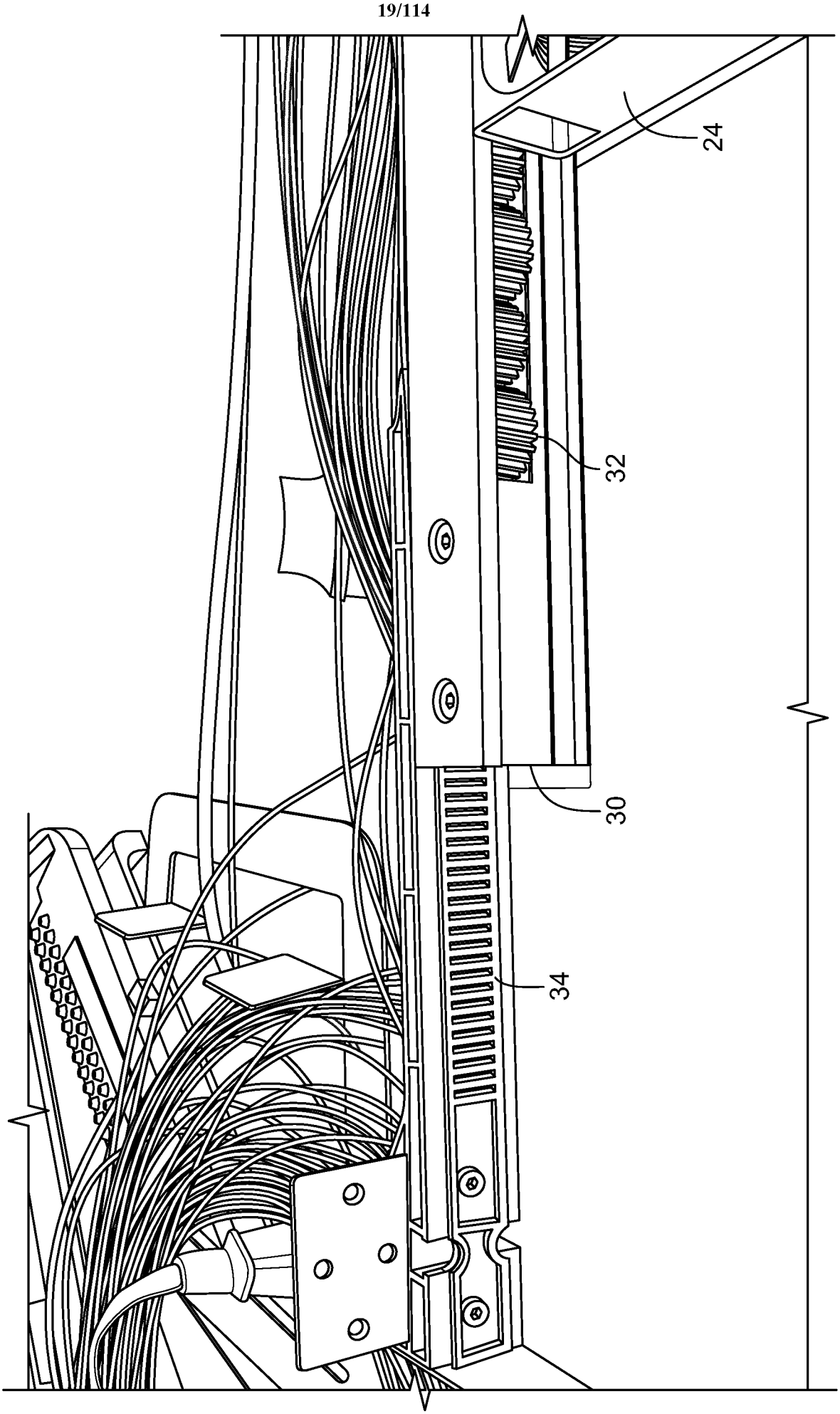

FIG. 19

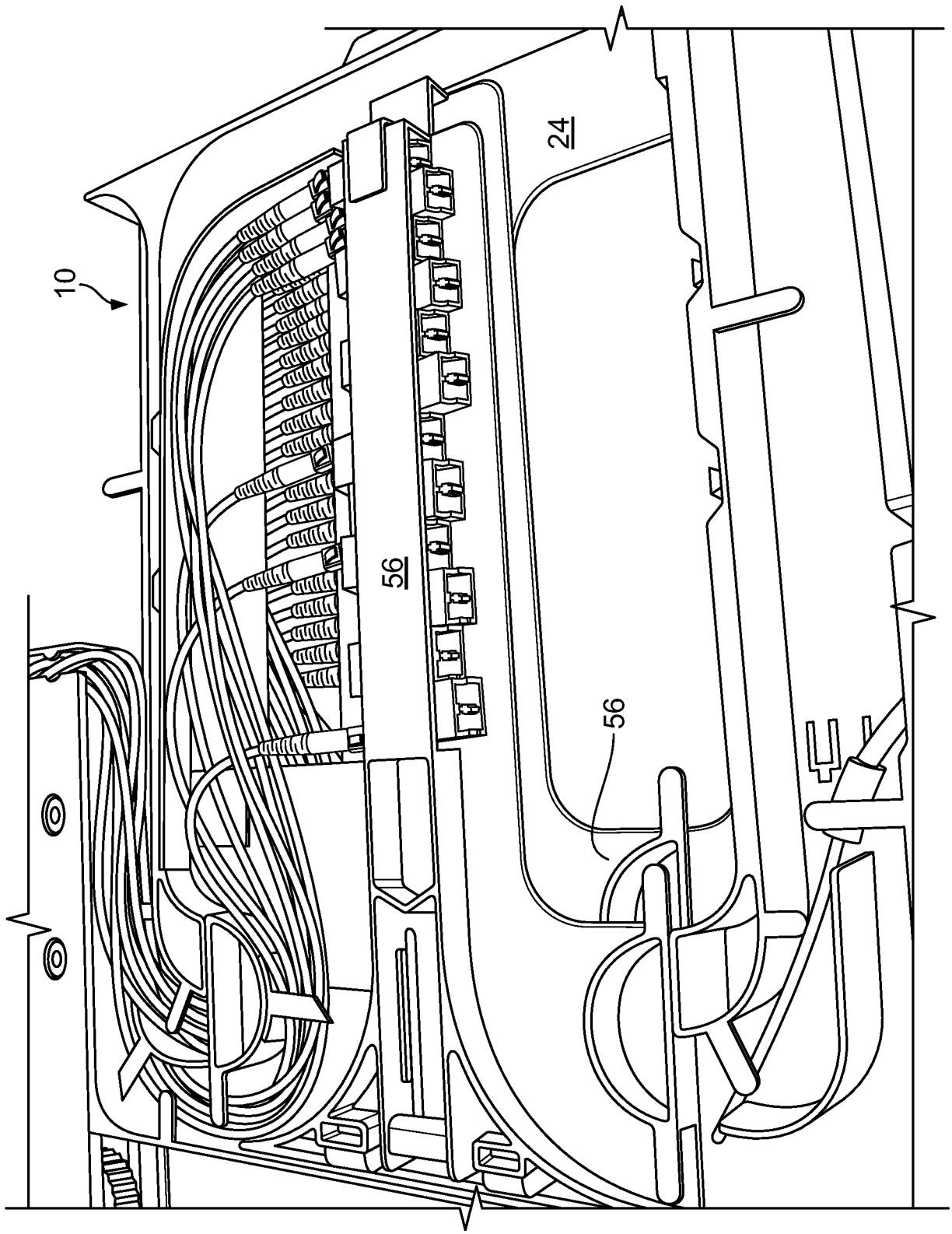

FIG. 20

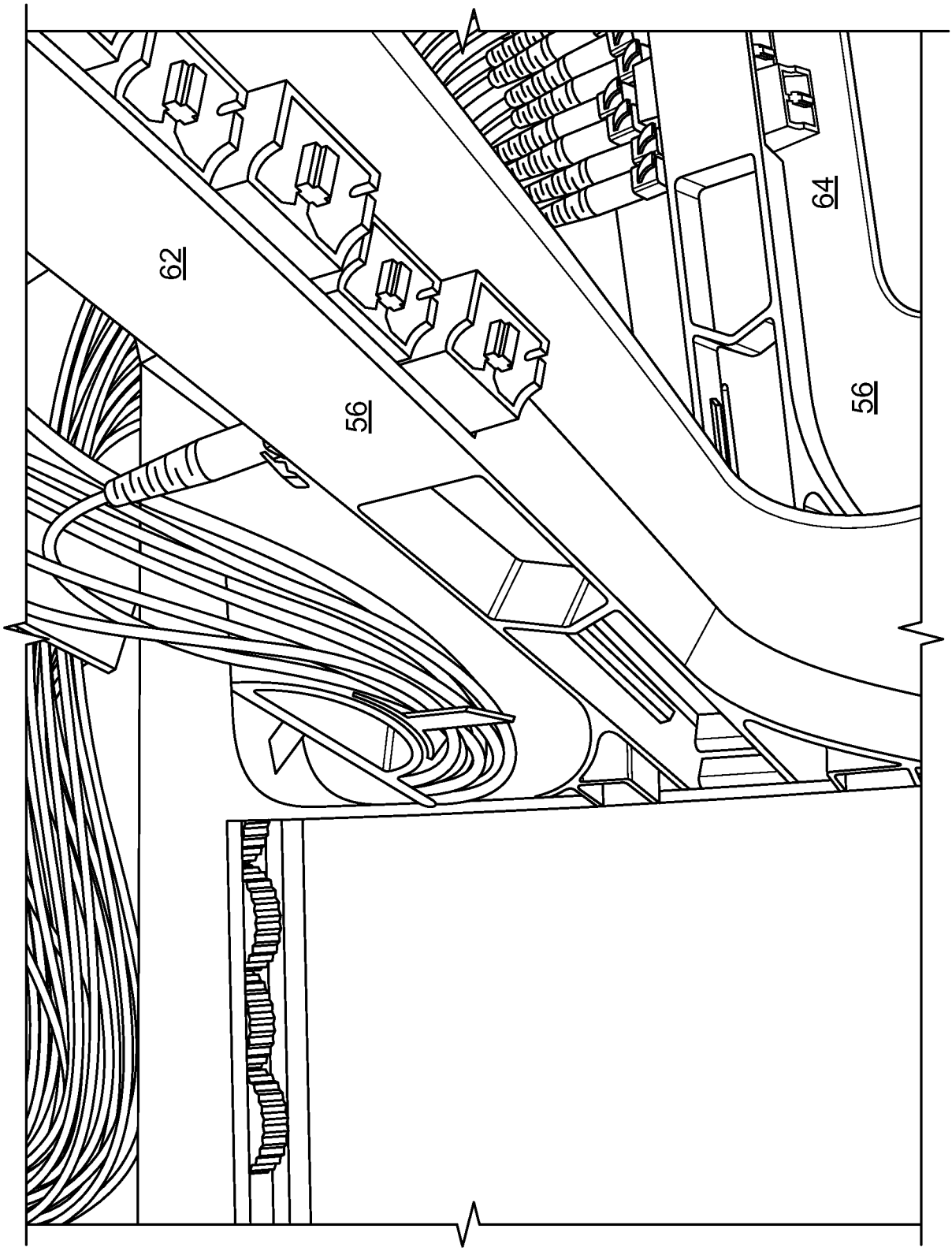

FIG. 21

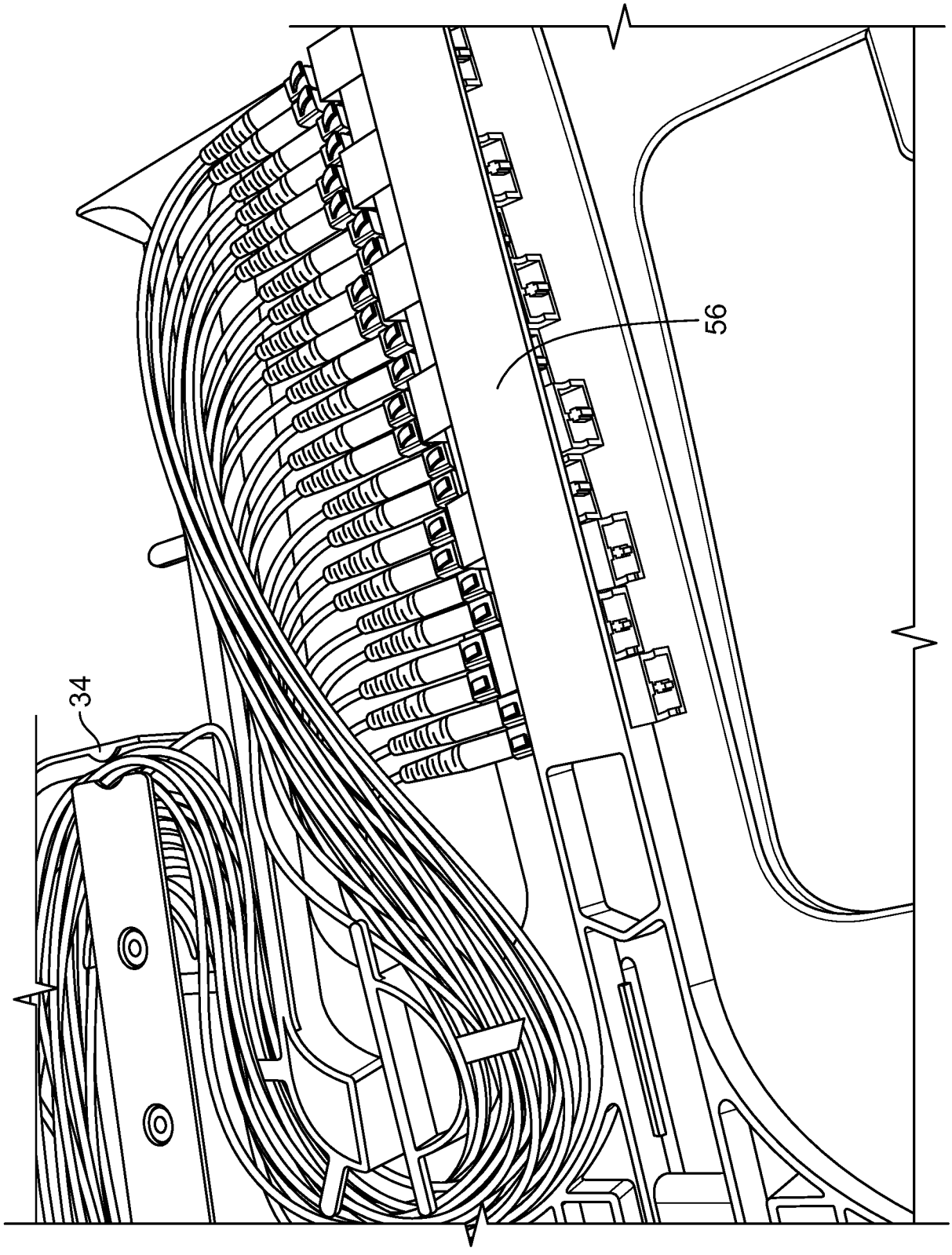

FIG. 22

FIG. 23

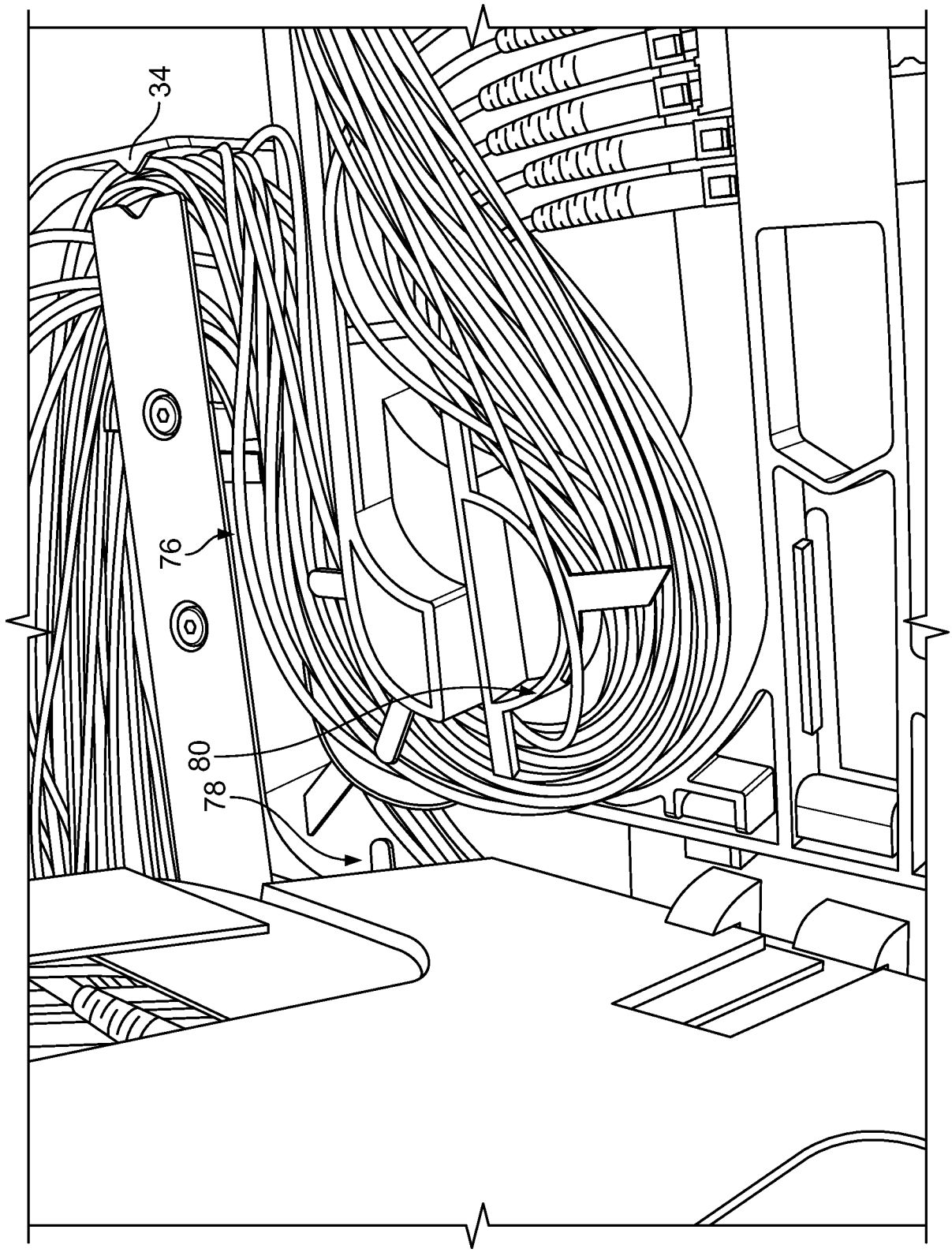

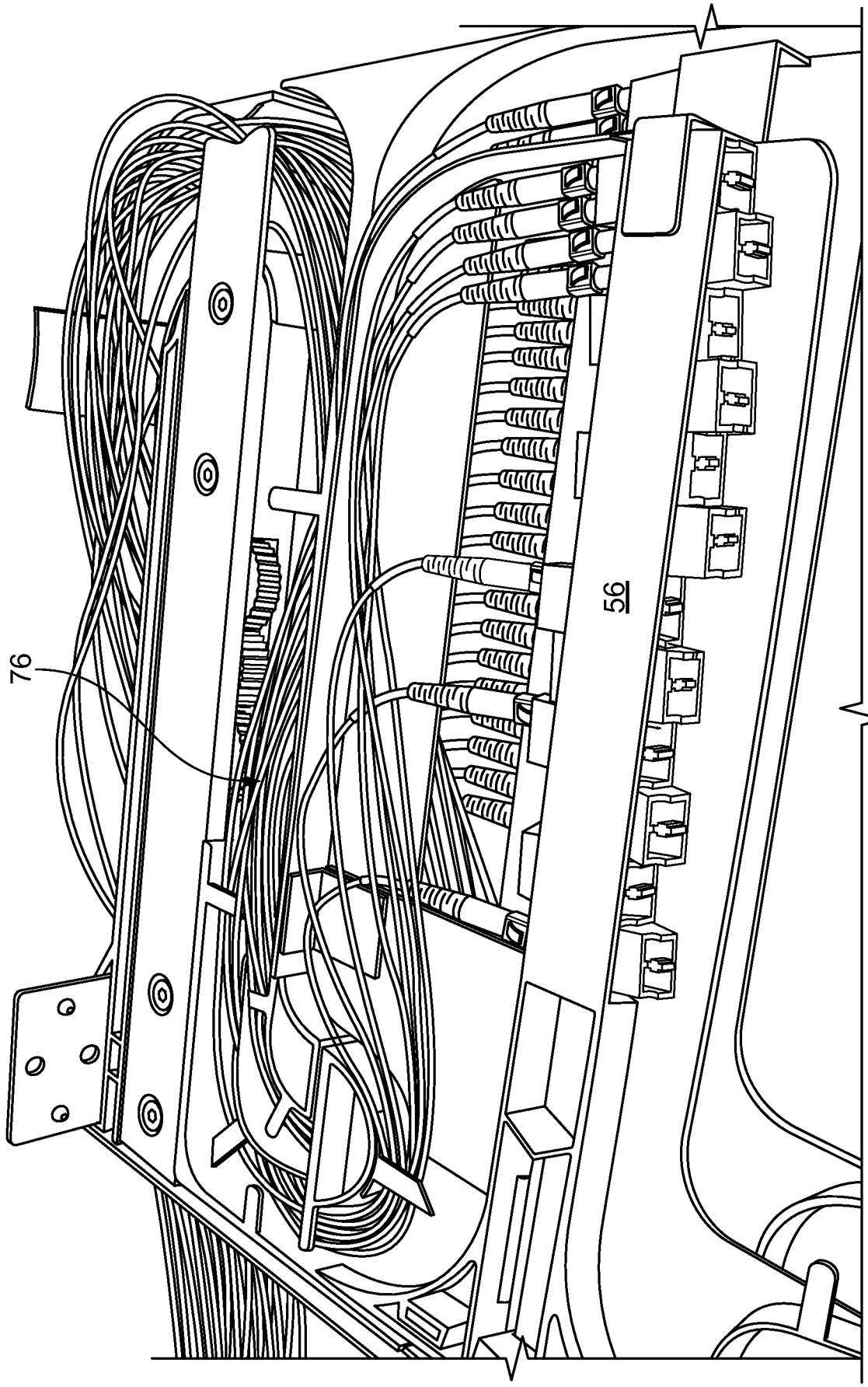

FIG. 24

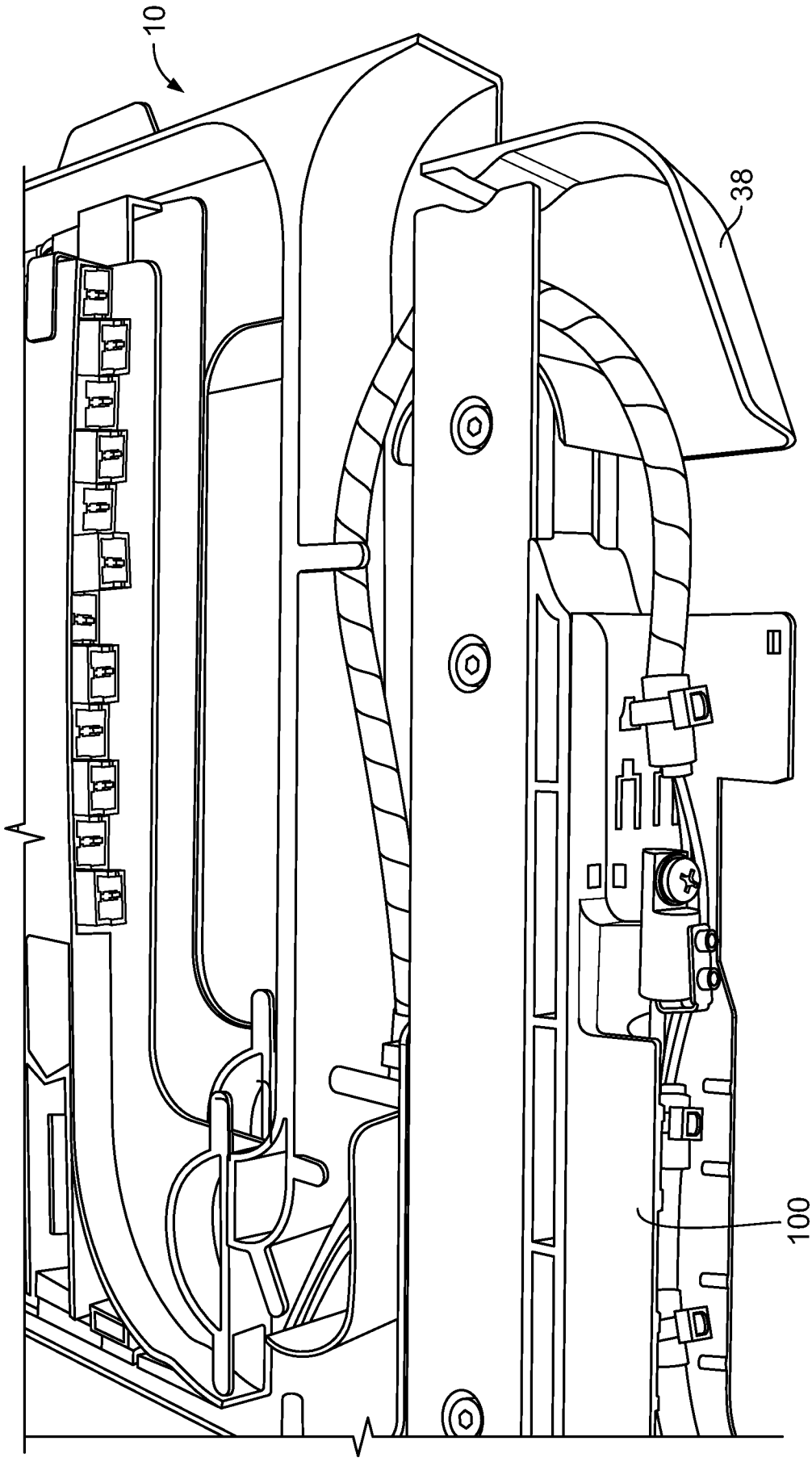

FIG. 25

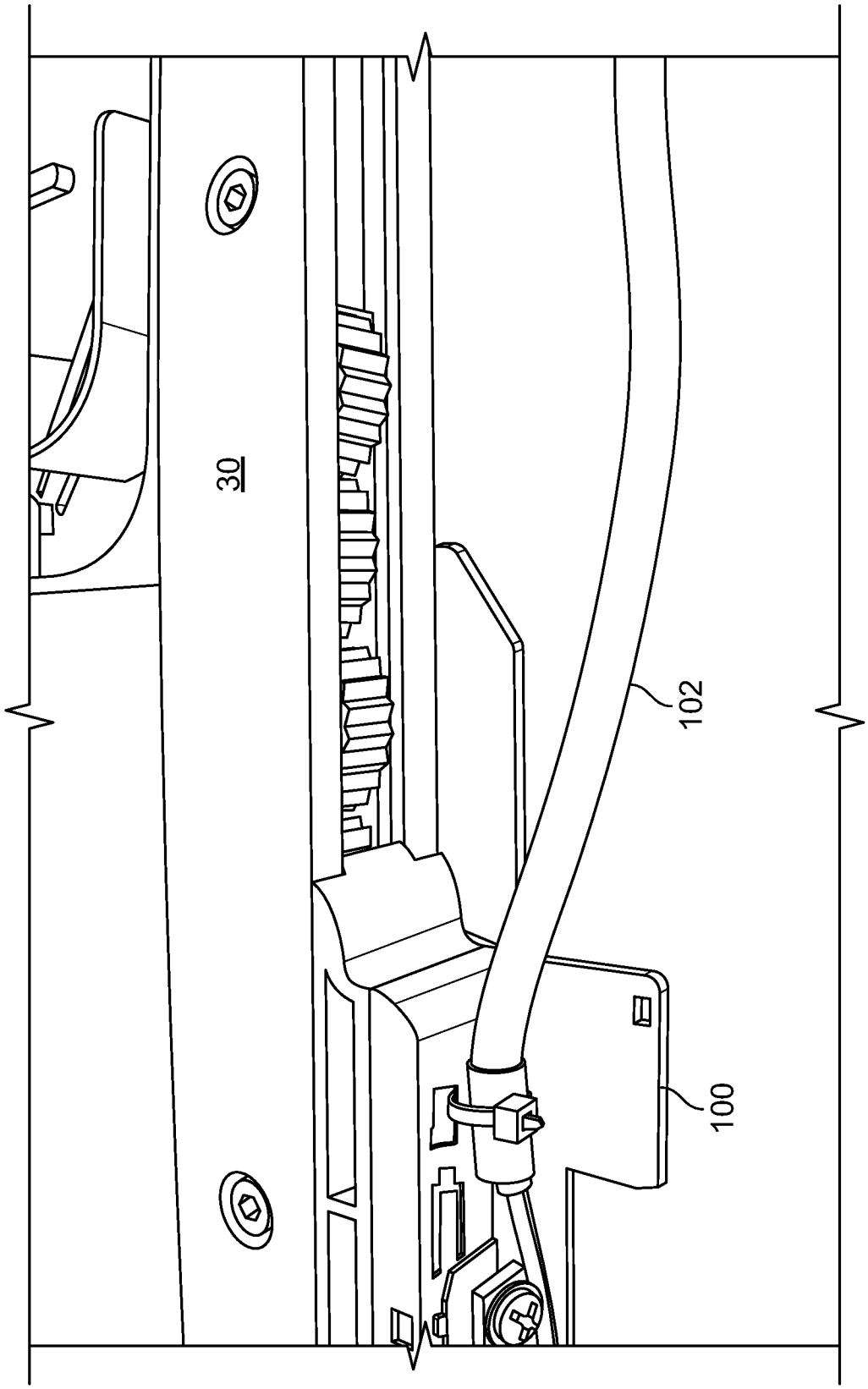

FIG. 26

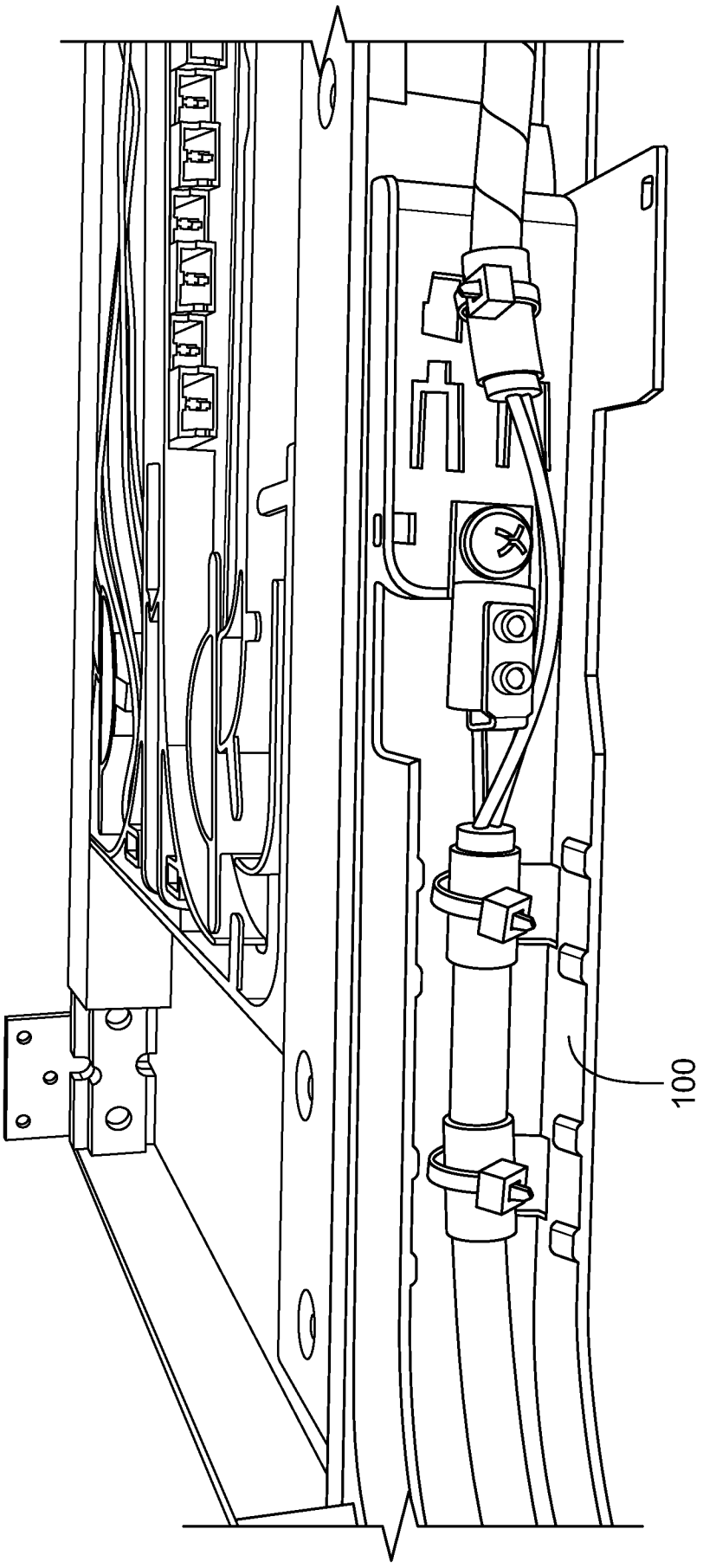

FIG. 27

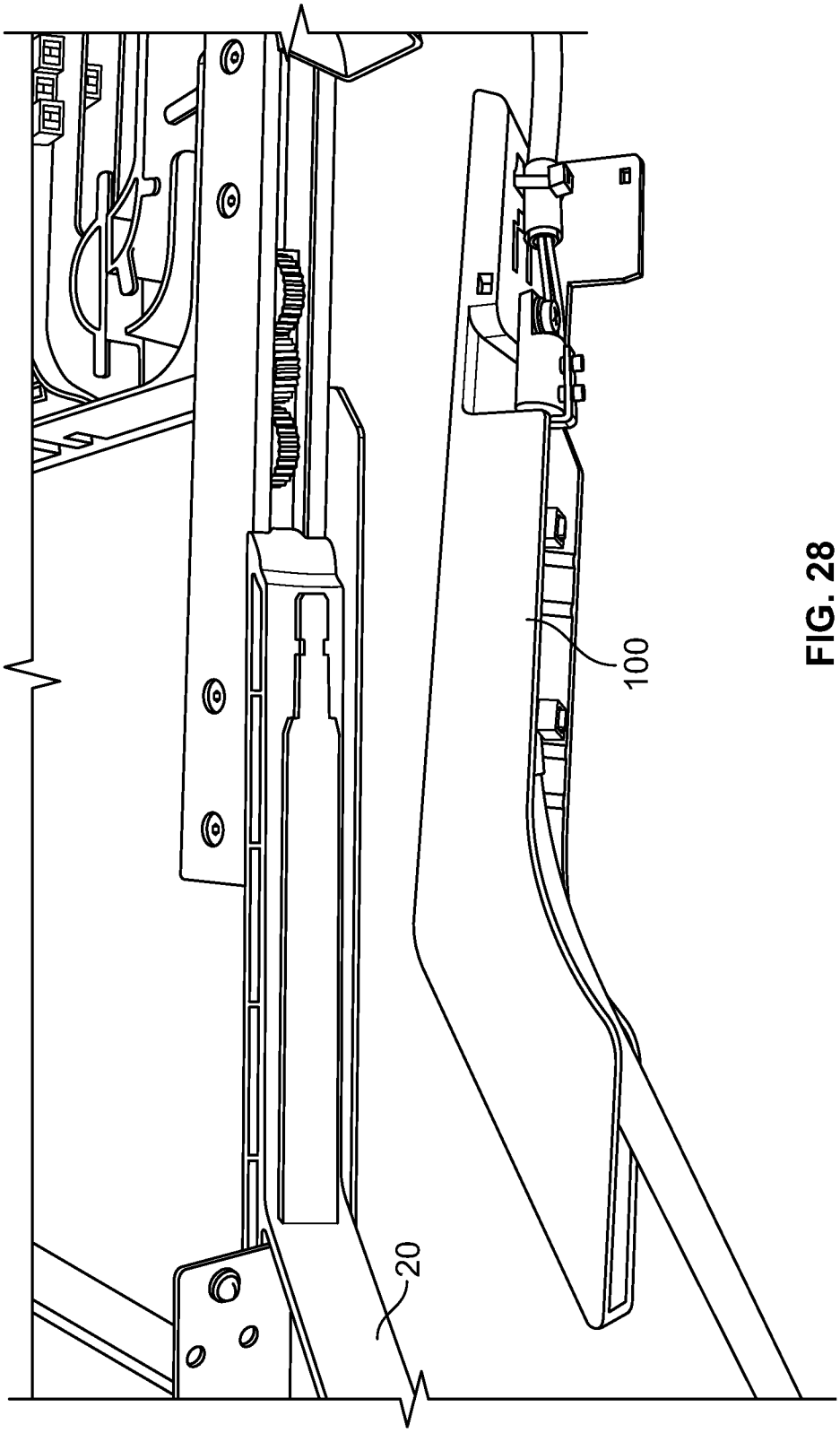

FIG. 28

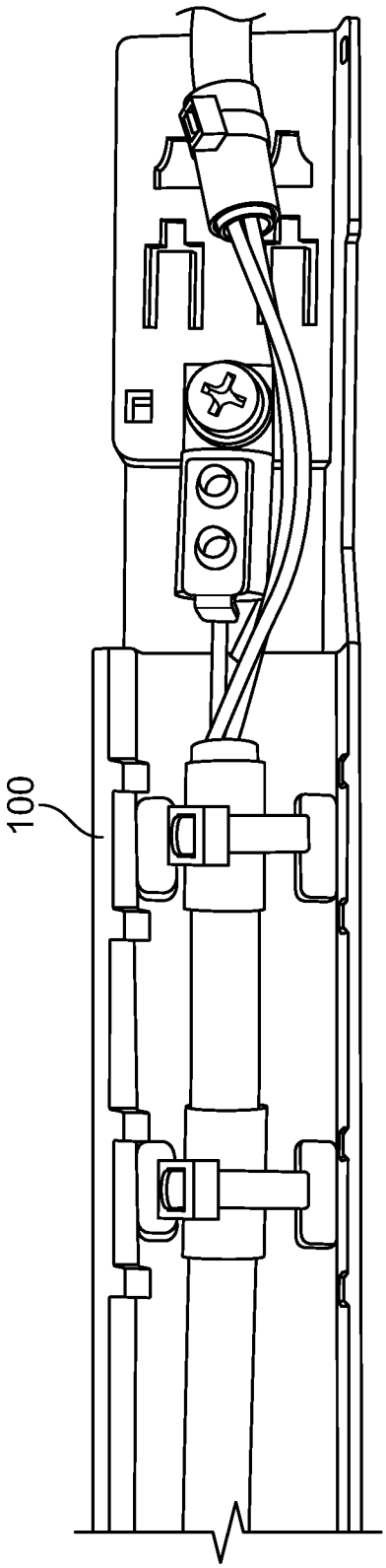

FIG. 29

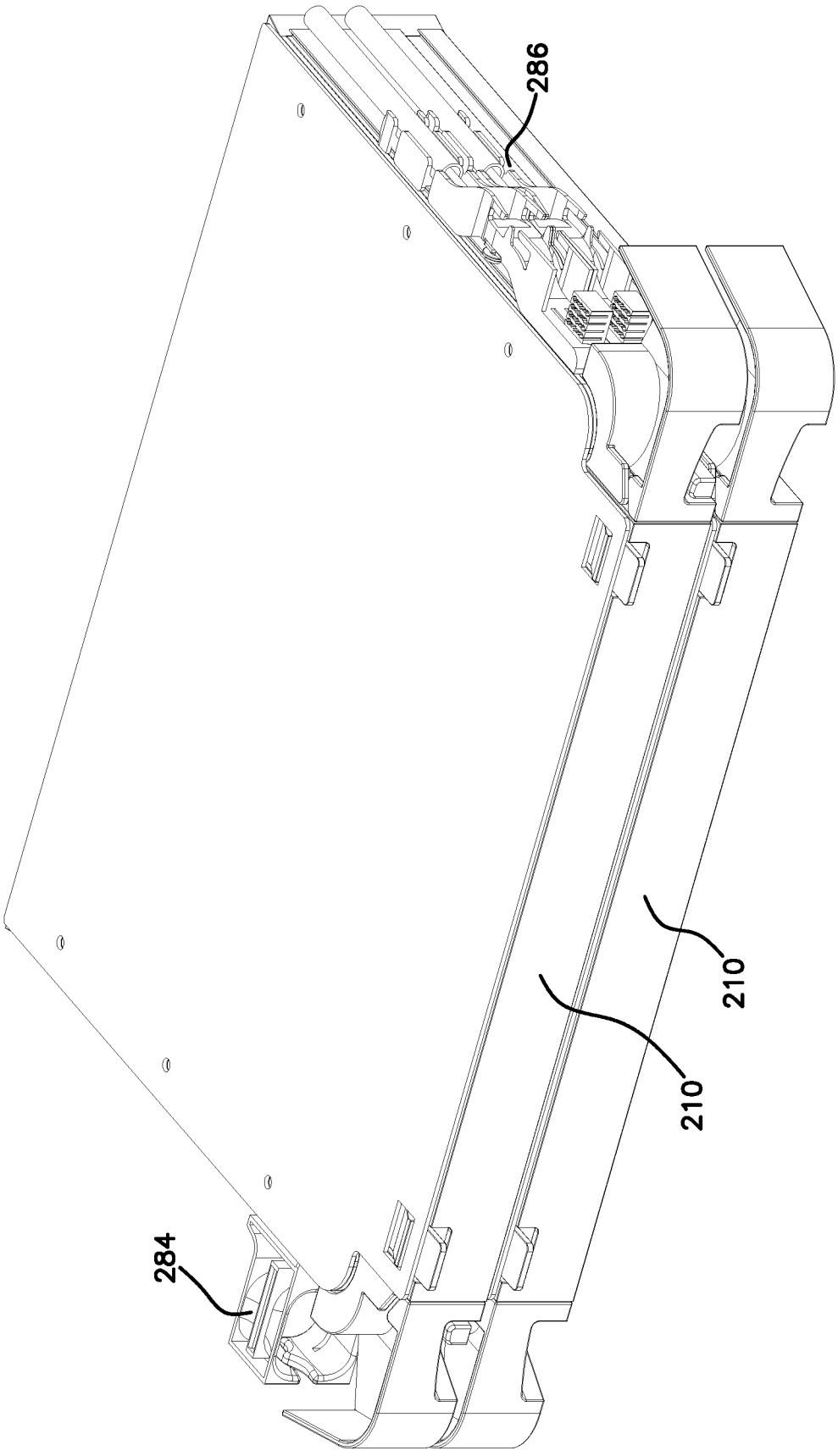

FIG. 30

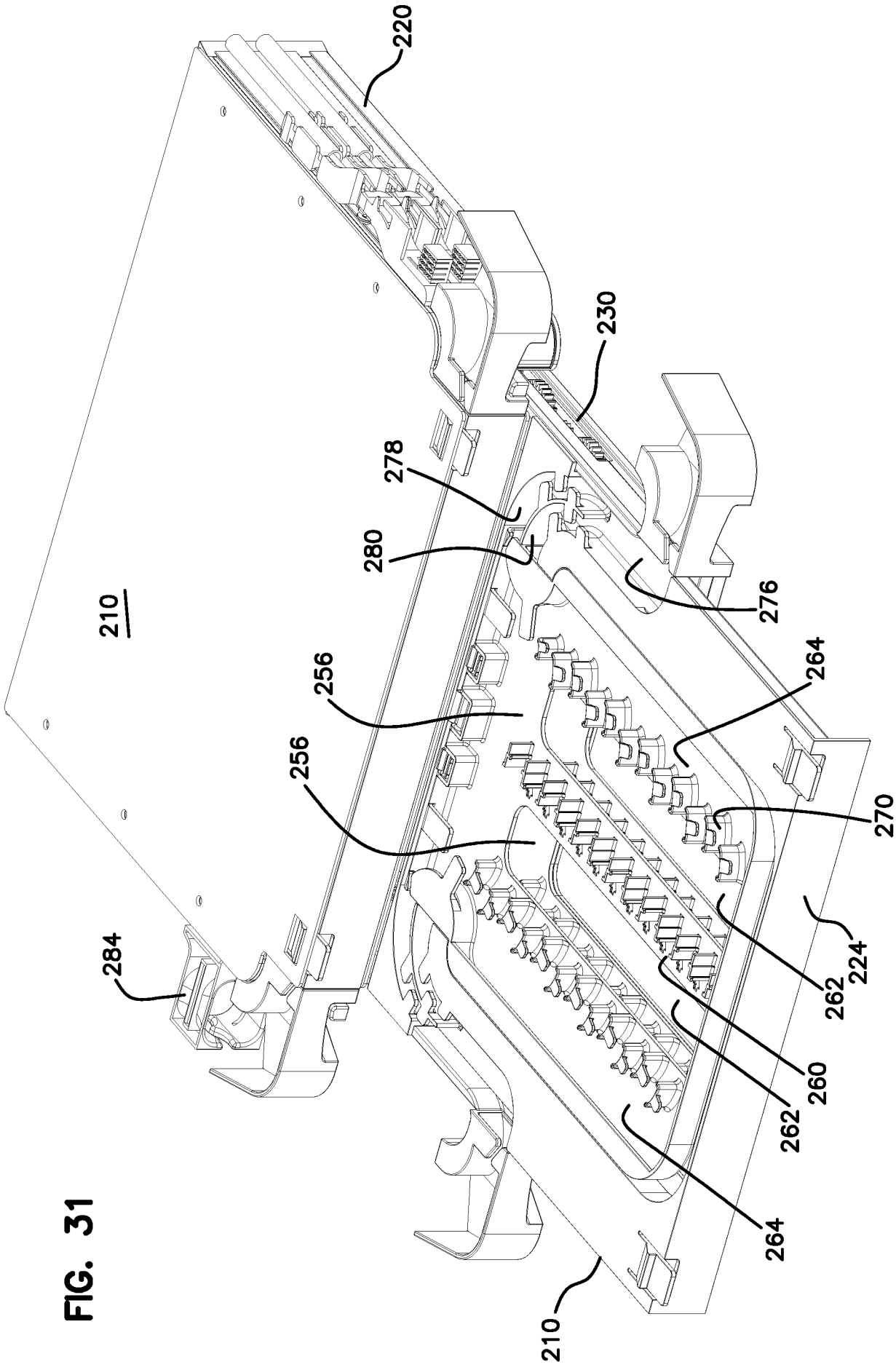
220
230
278
280
276
210
256
256
264
270
284
224
262
260
262
264
210

FIG. 31

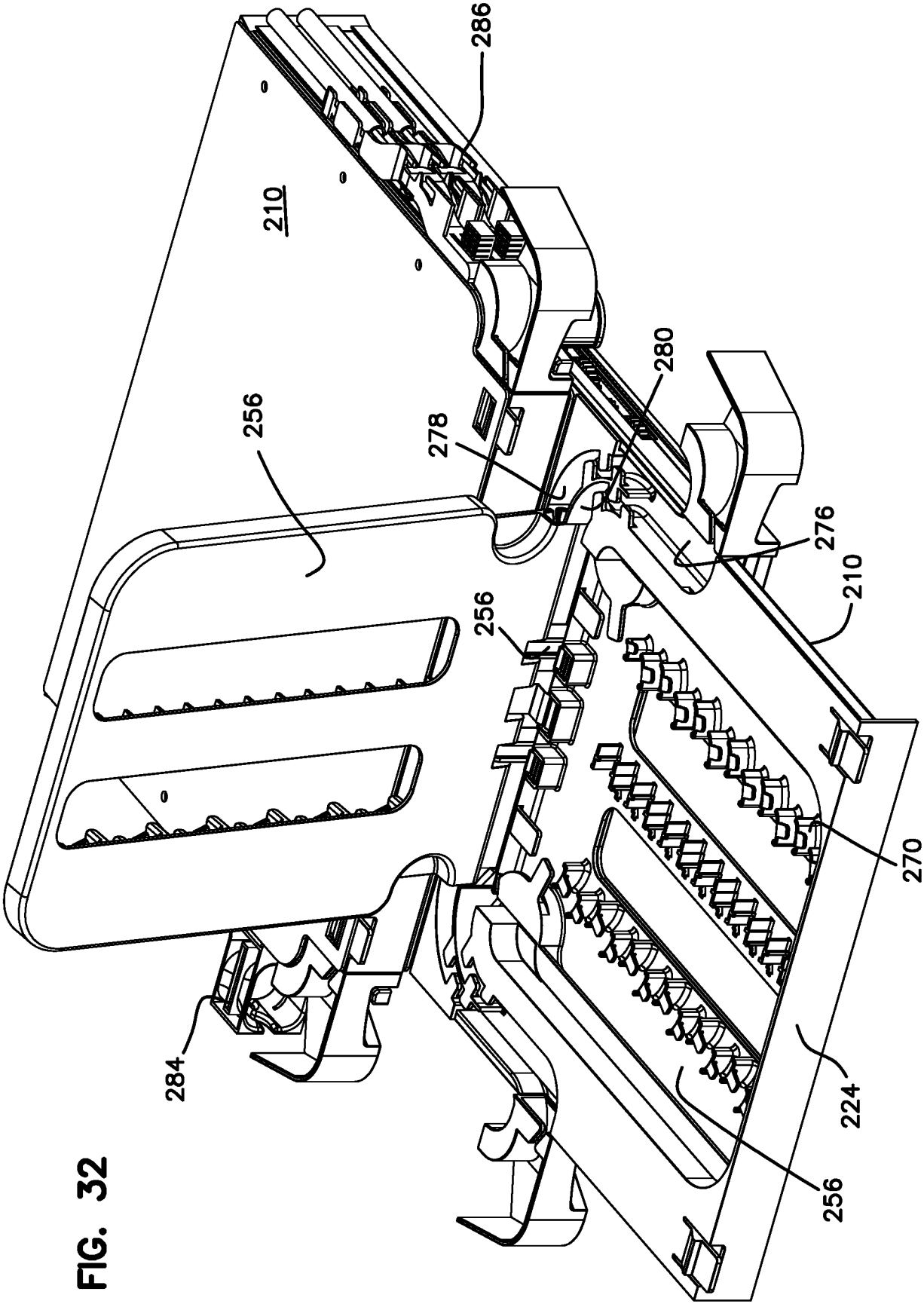

FIG. 32

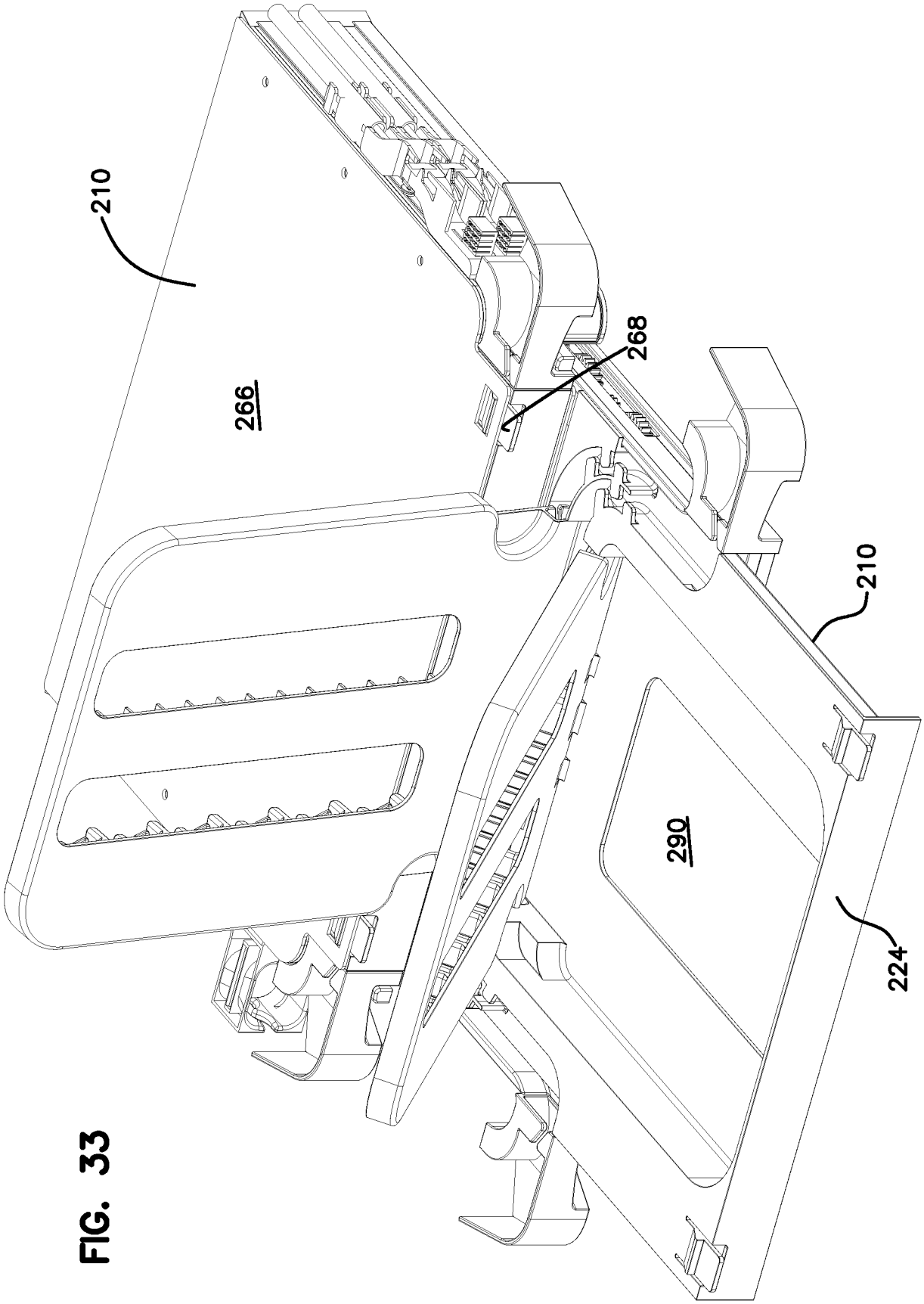

FIG. 33

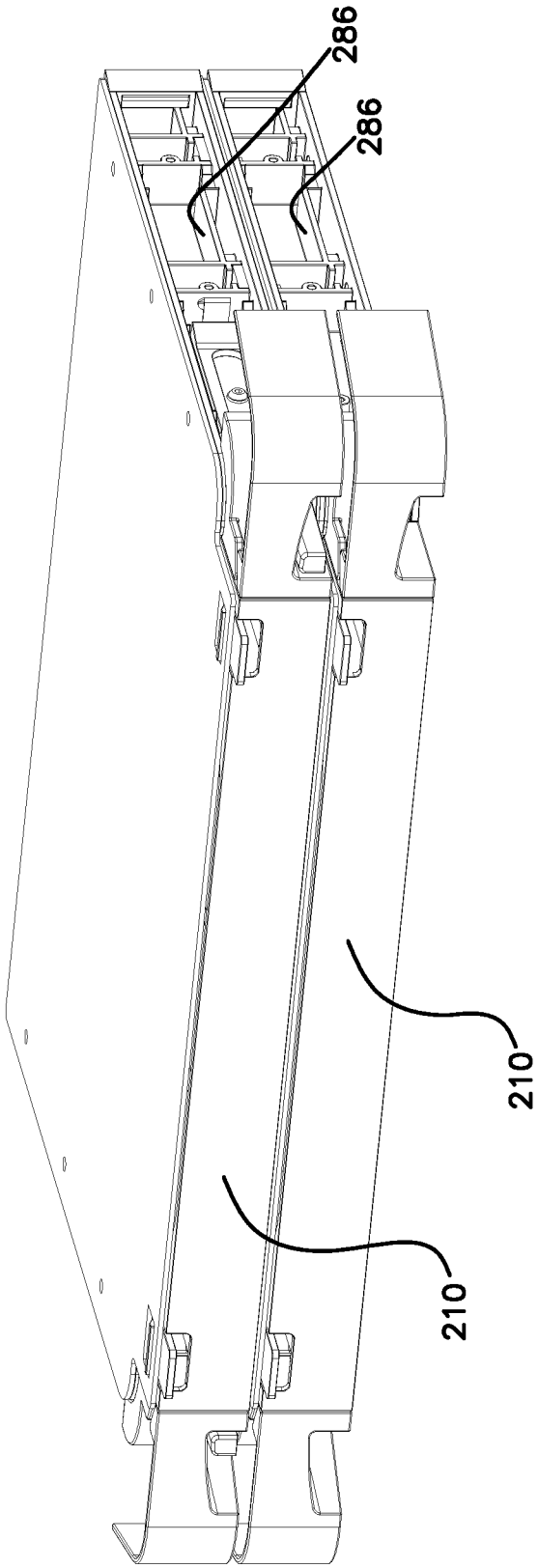

FIG. 34

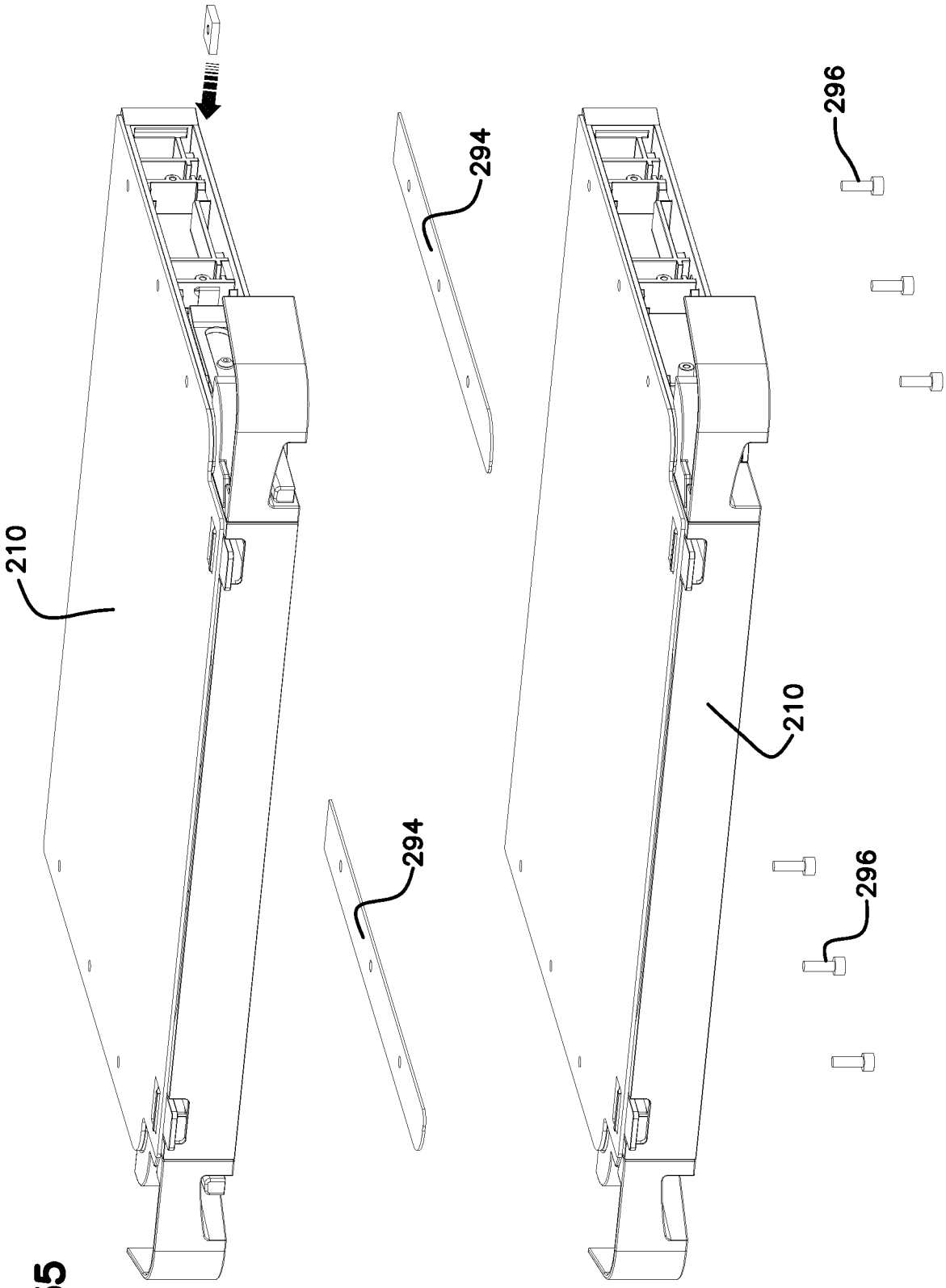

FIG. 35

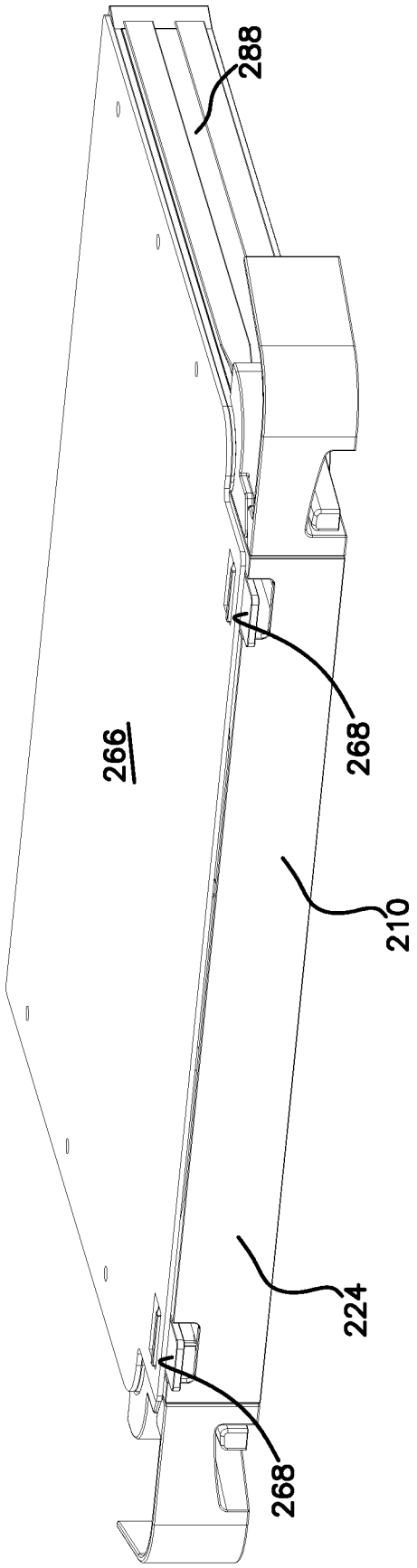

FIG. 36

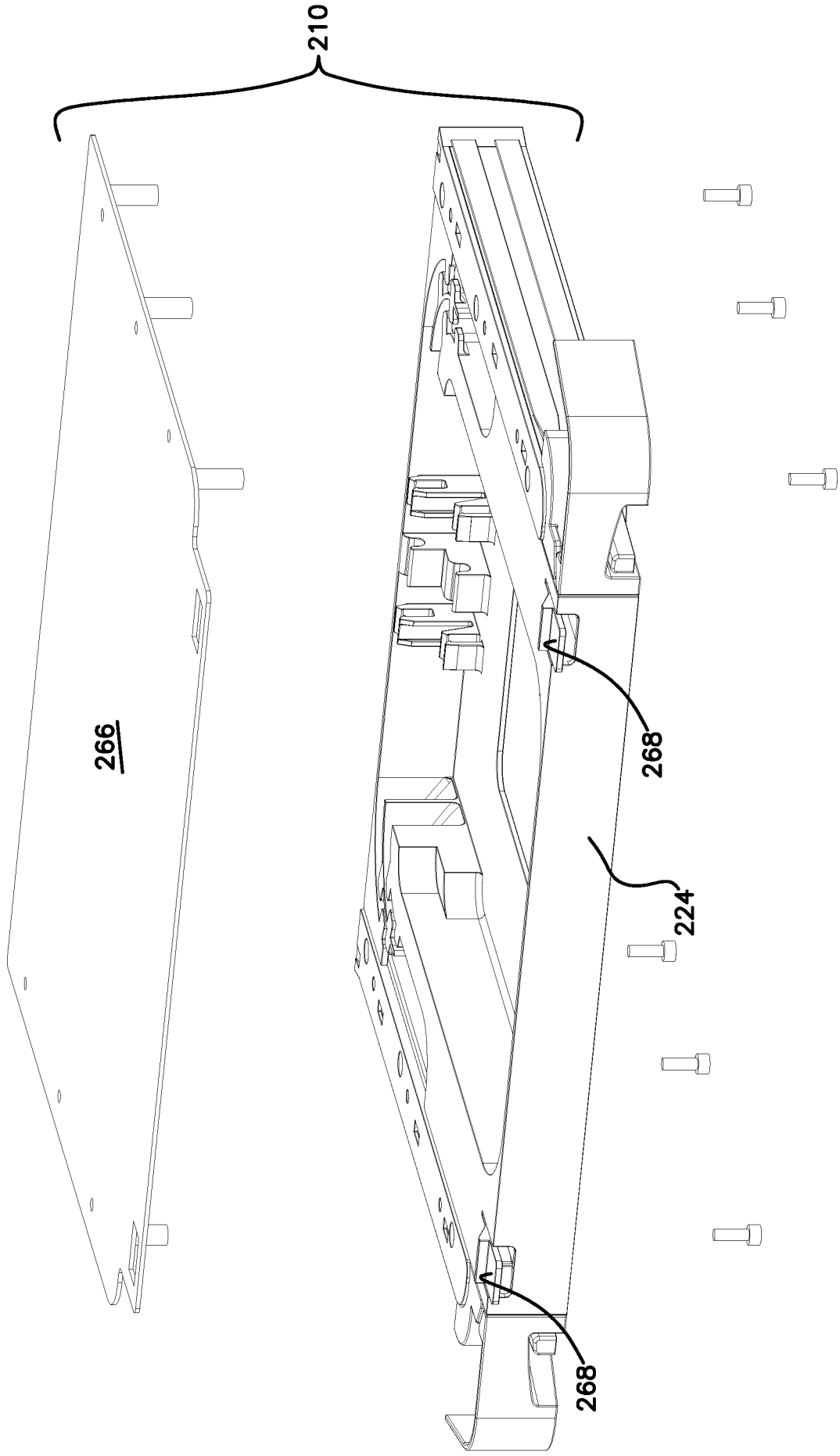

FIG. 37

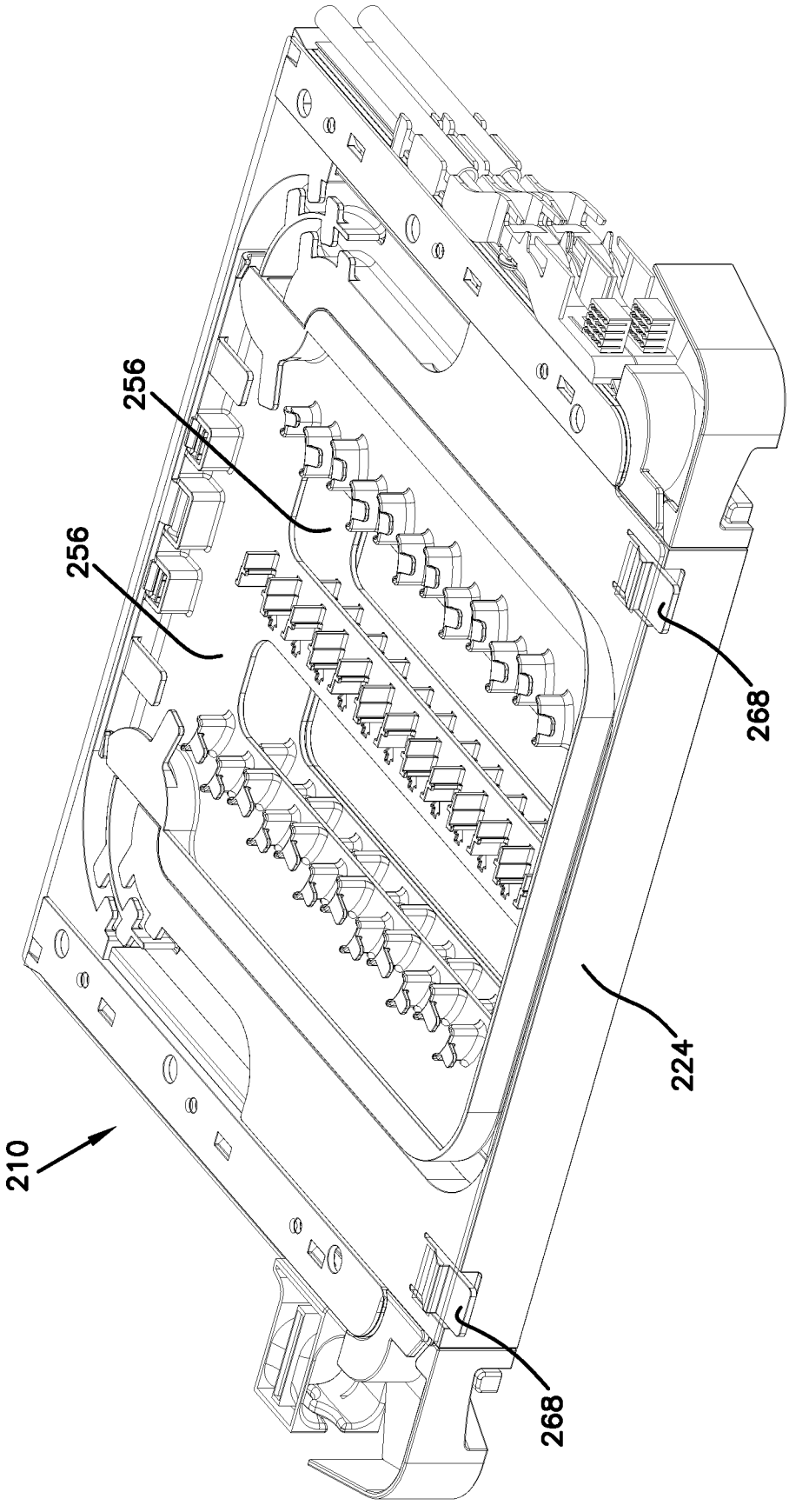

FIG. 38

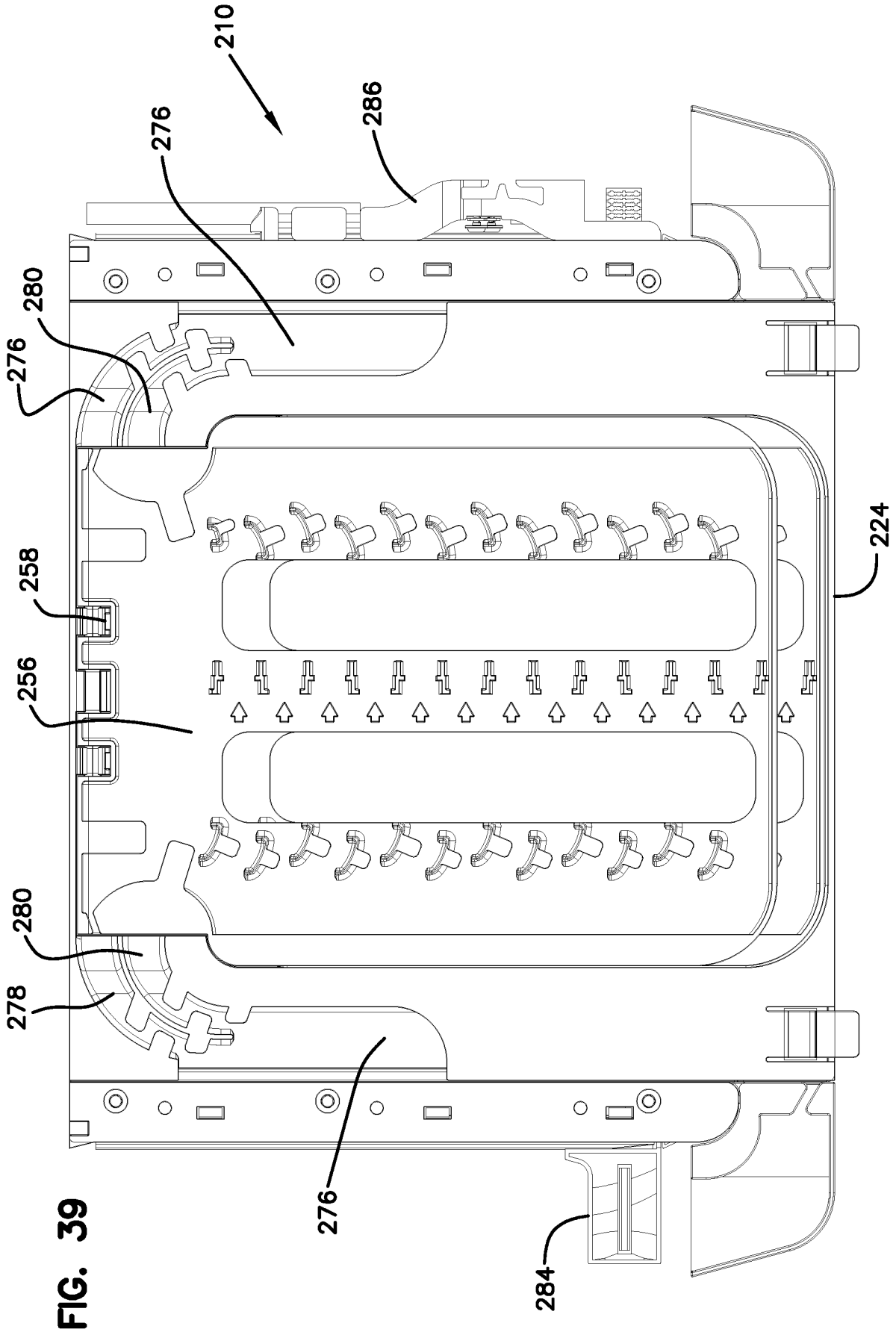

FIG. 39

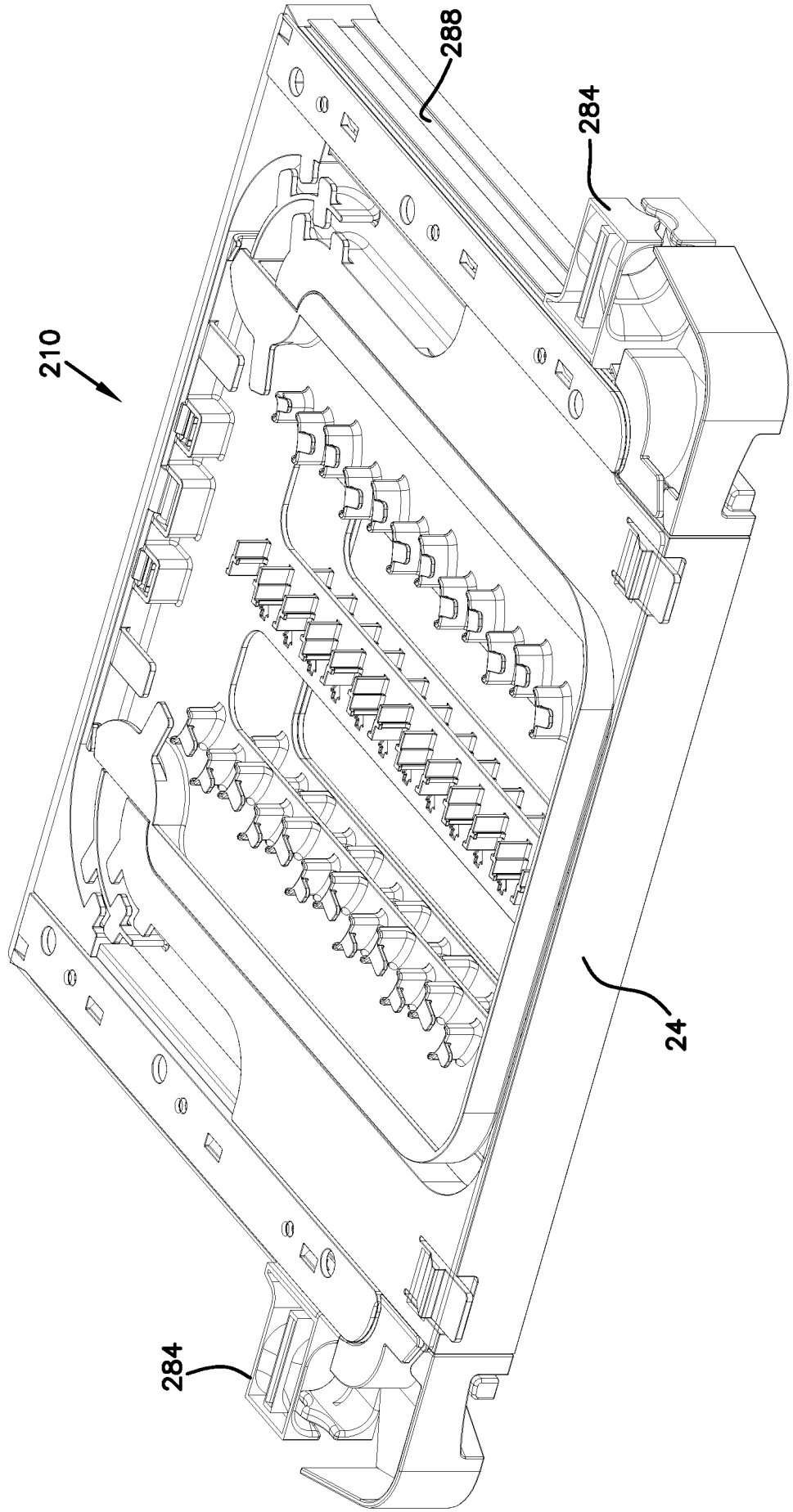

FIG. 40

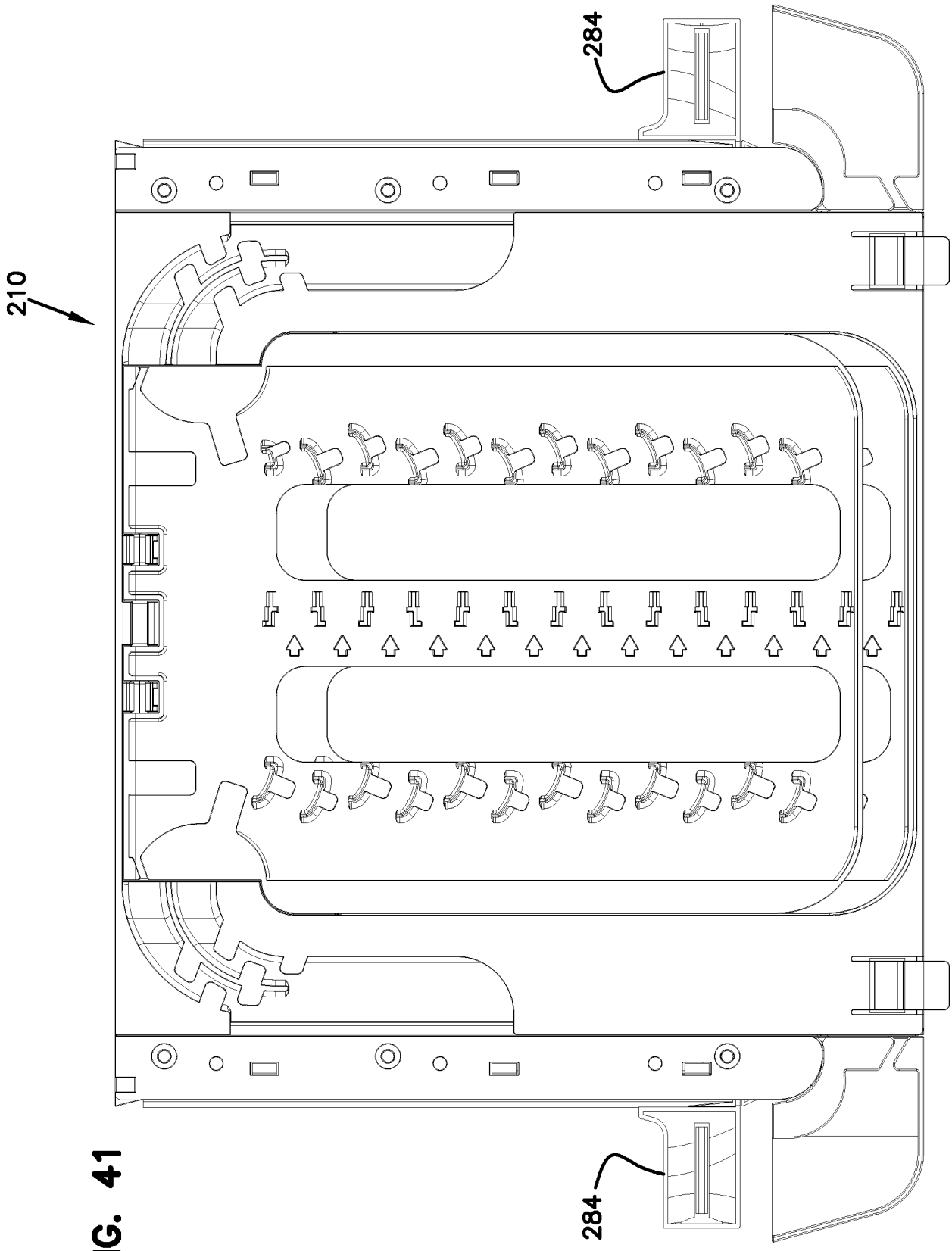

FIG. 41

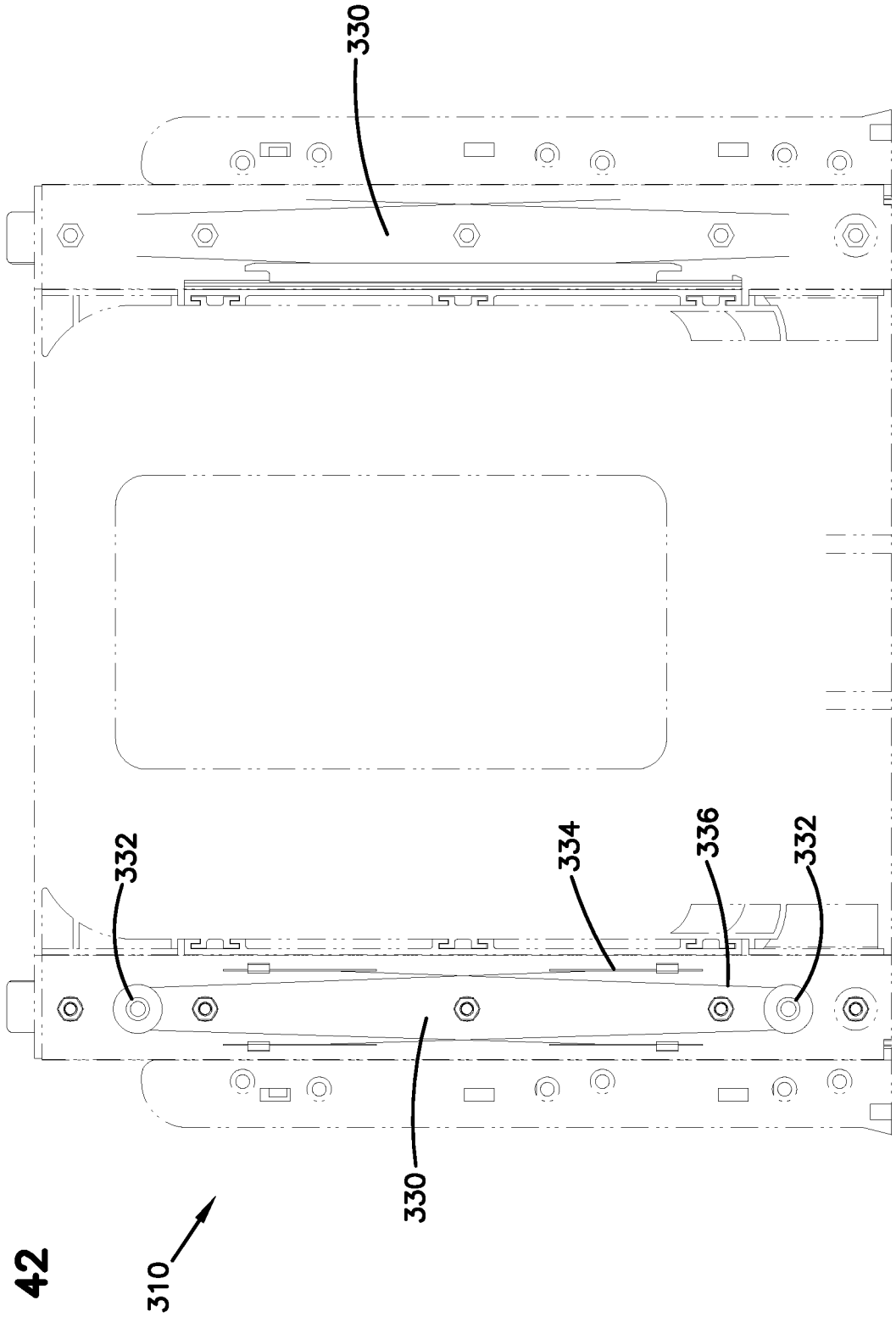

FIG. 42

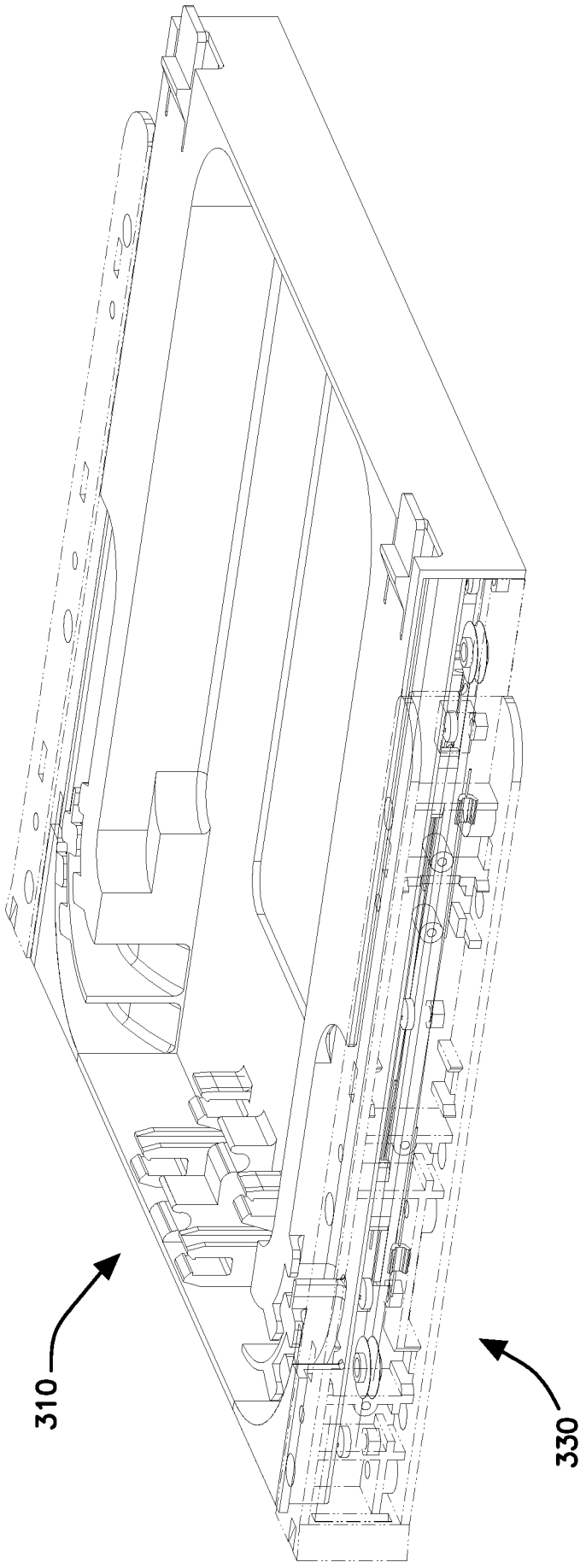

FIG. 43

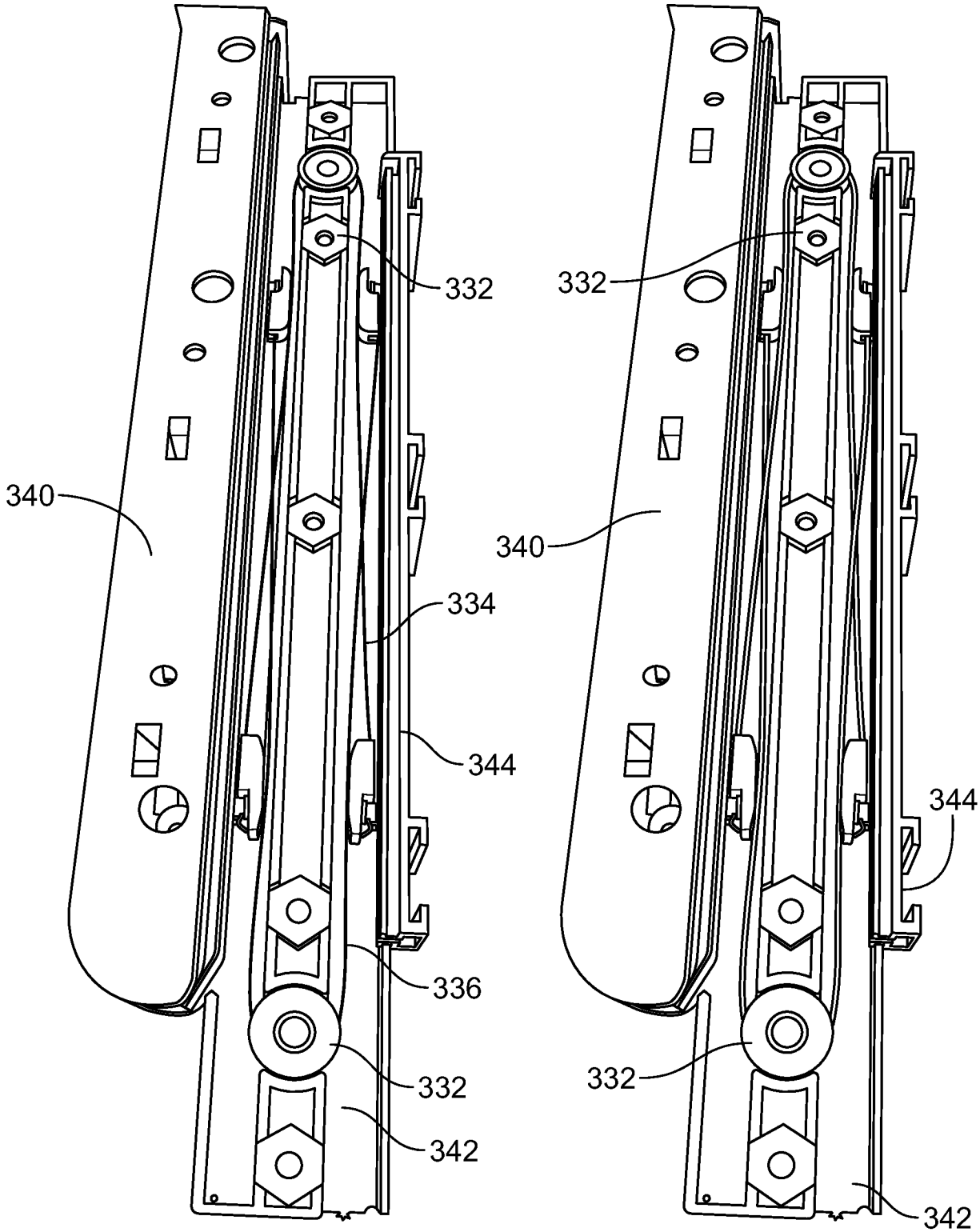

FIG. 44

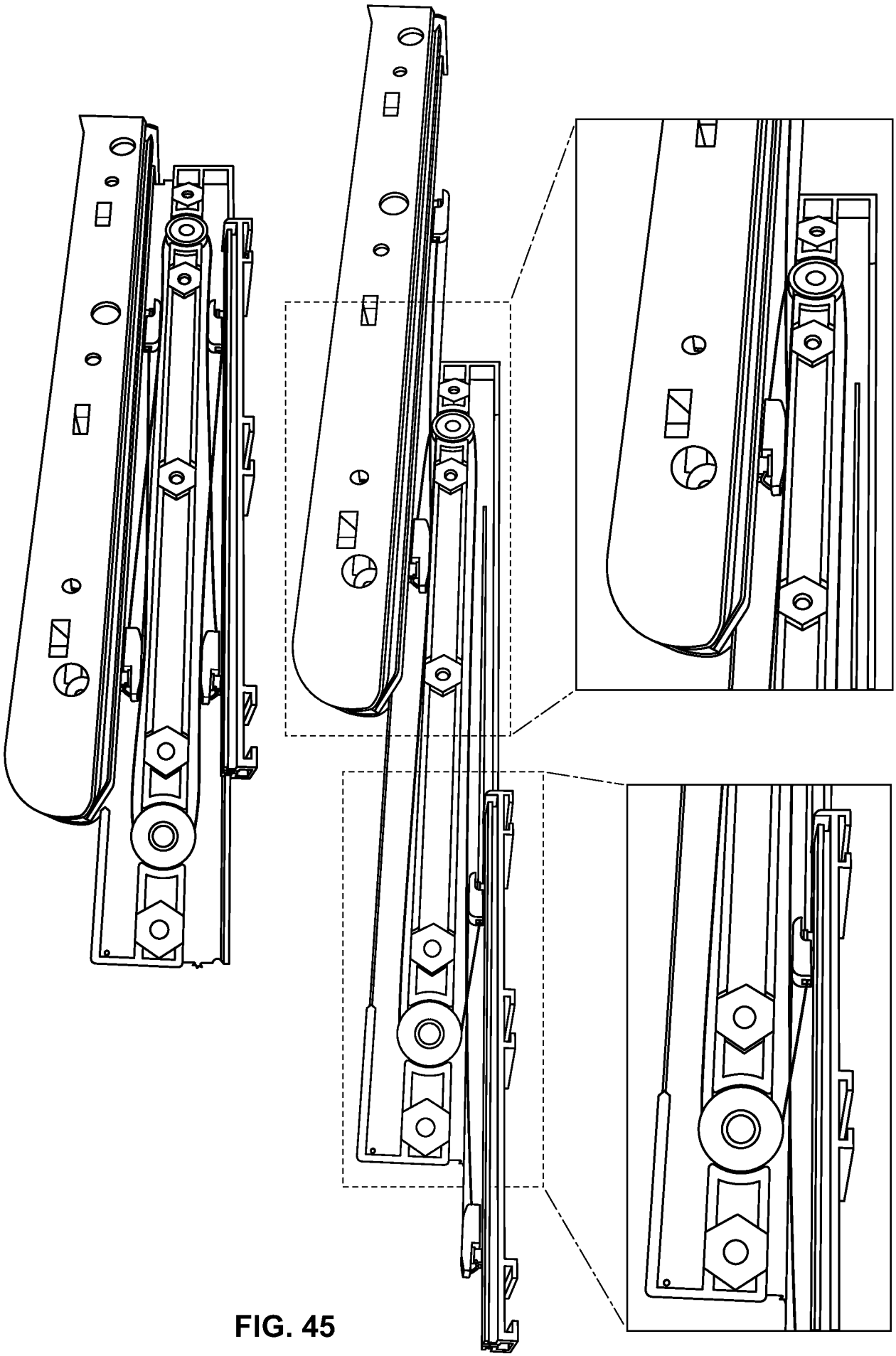

FIG. 45

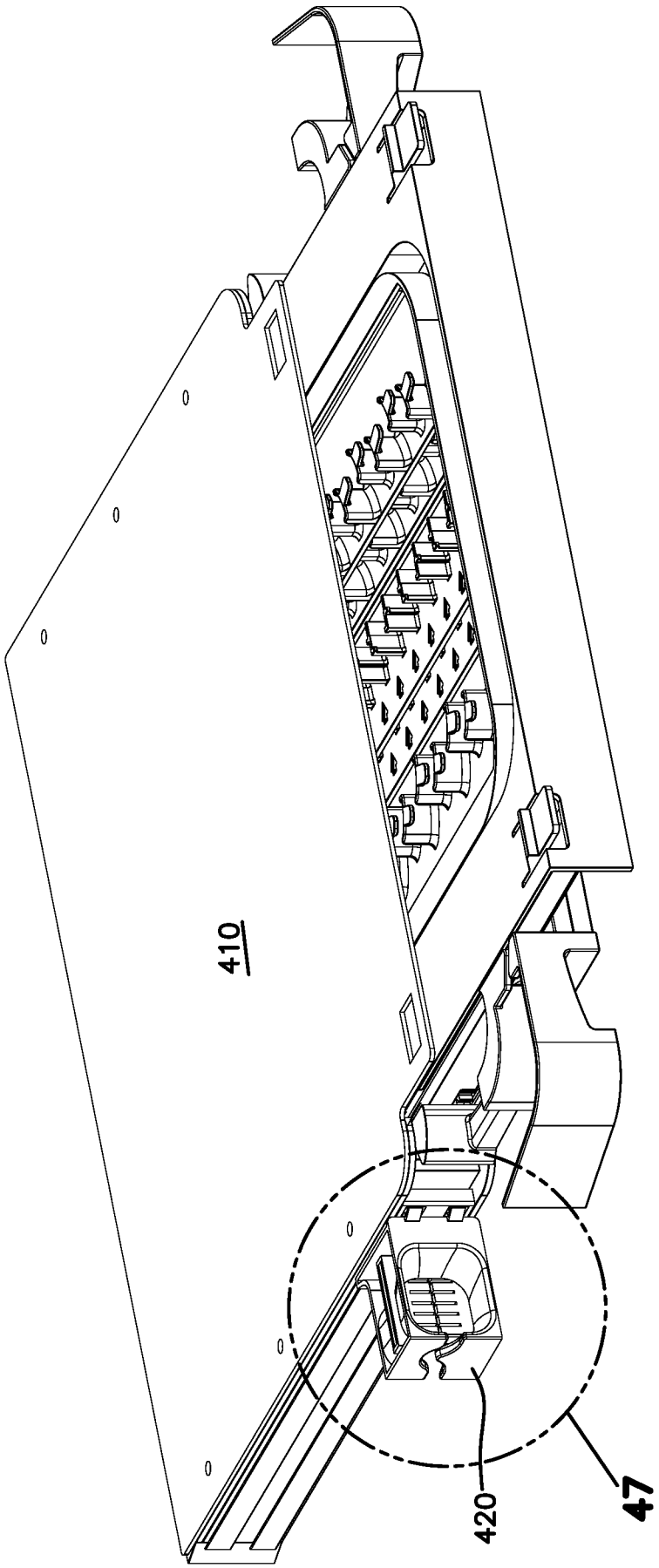

FIG. 46

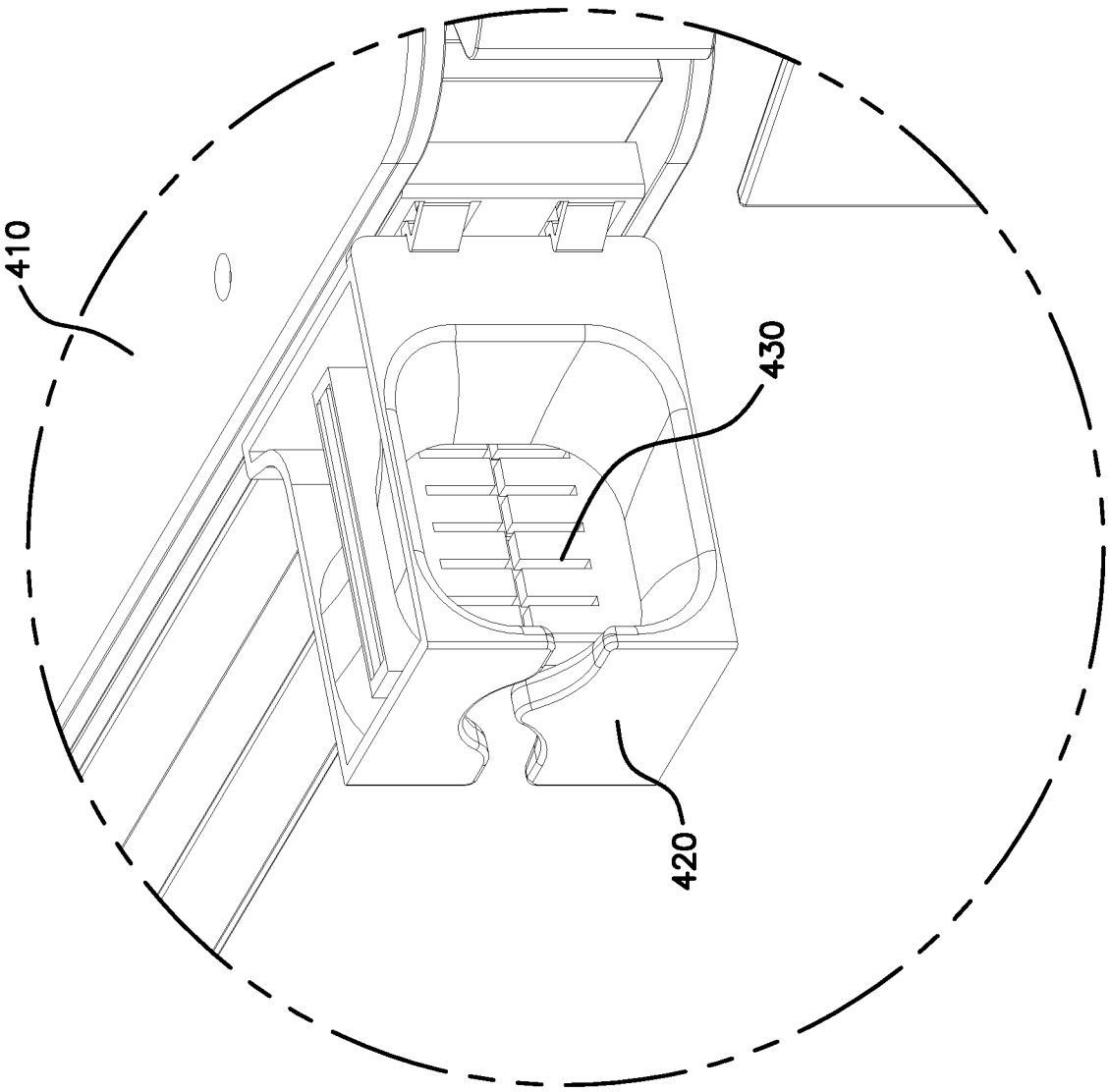

FIG. 47

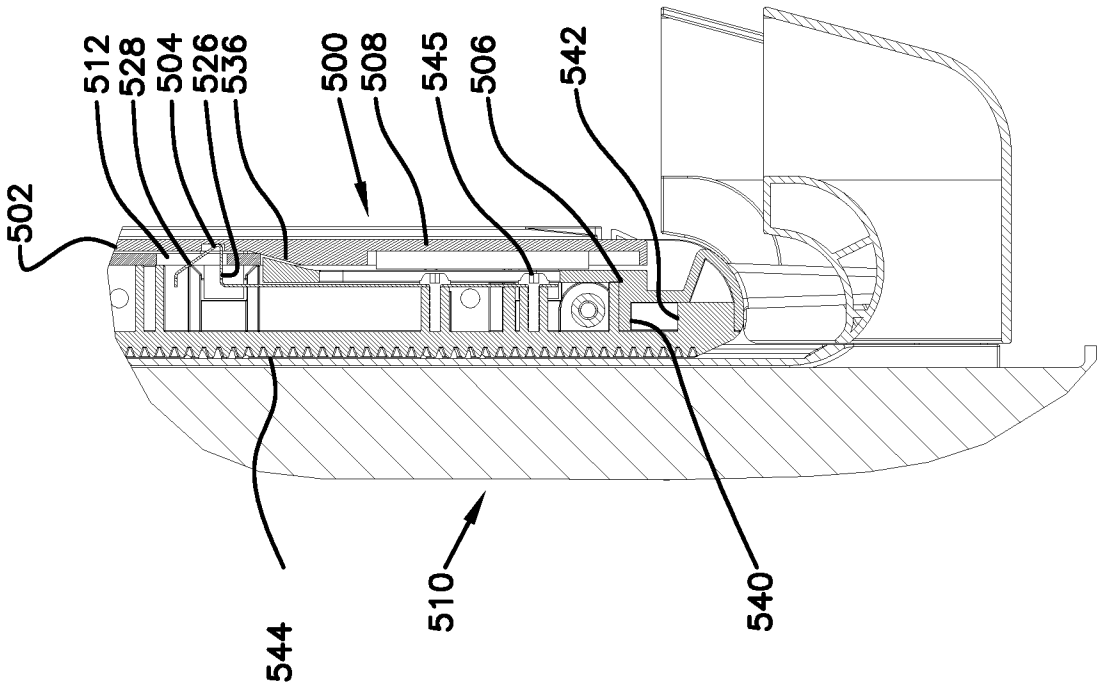

FIG. 48

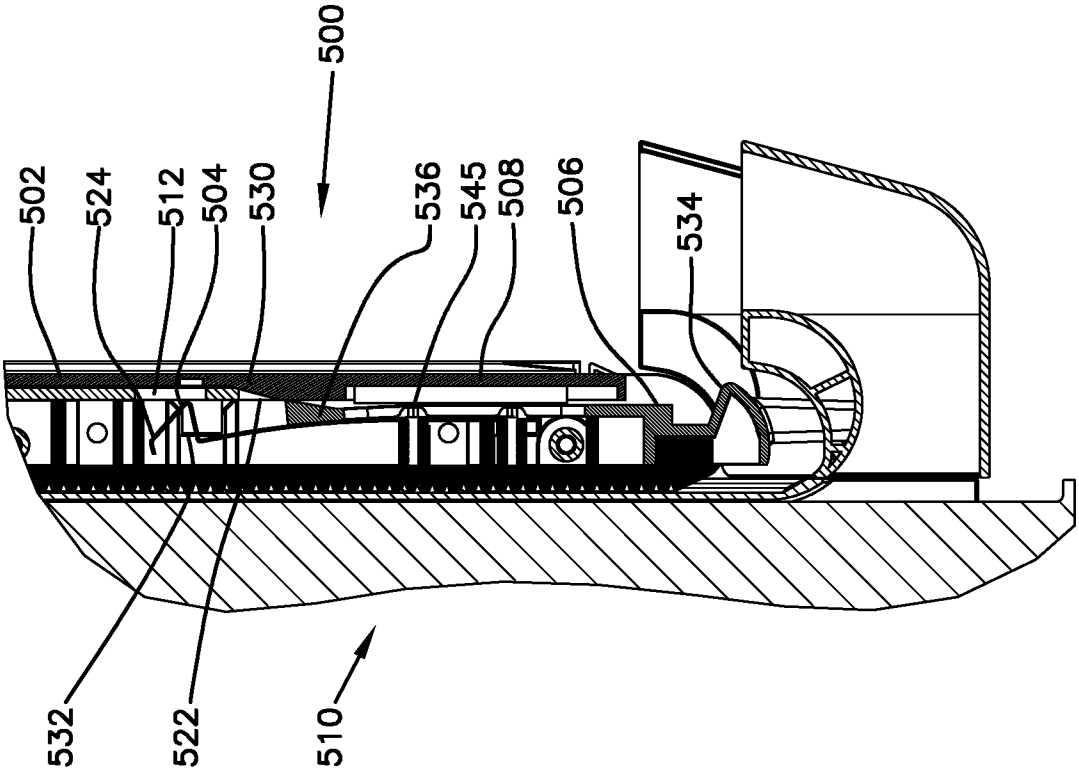

FIG. 49

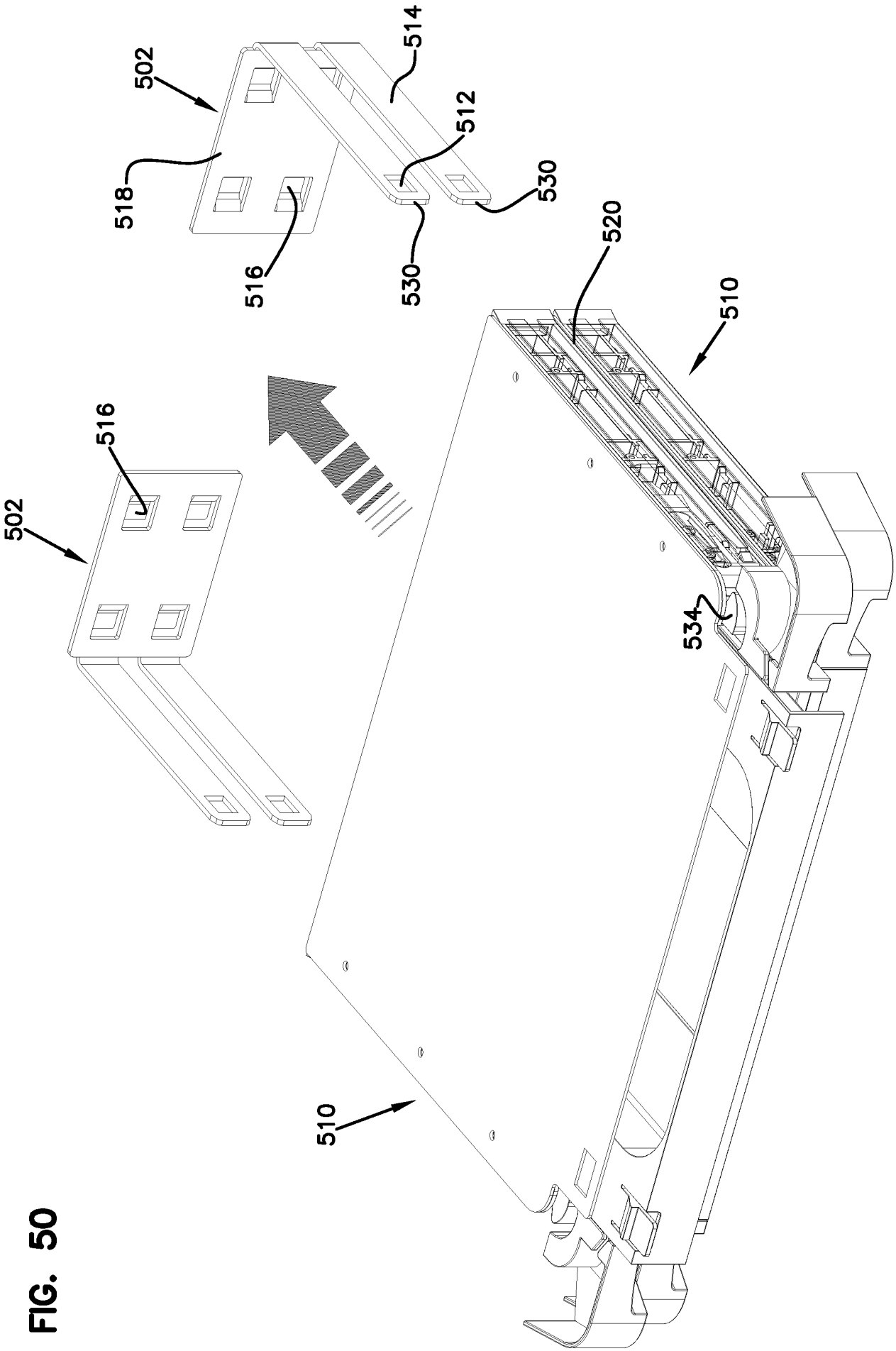

FIG. 50

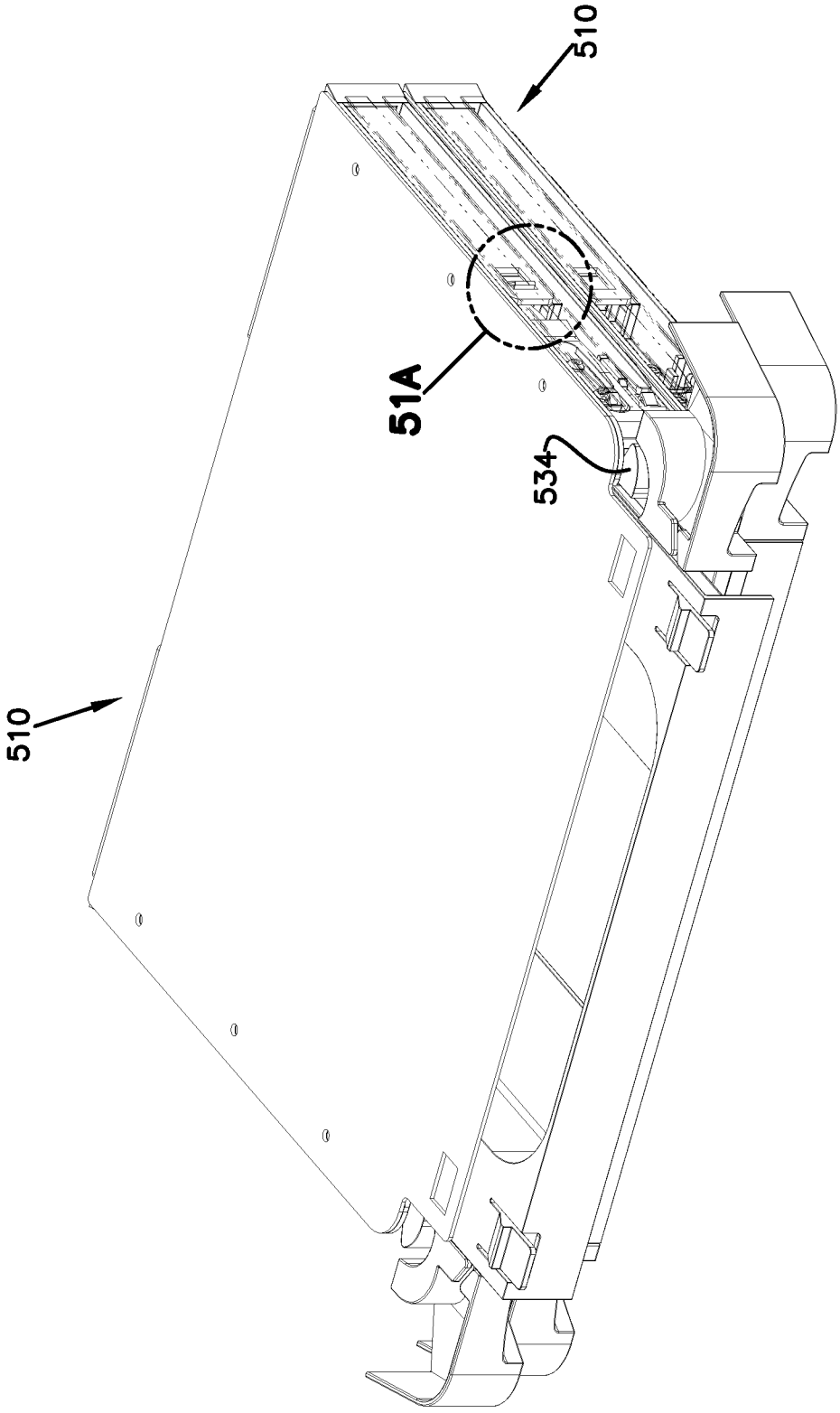

FIG. 51

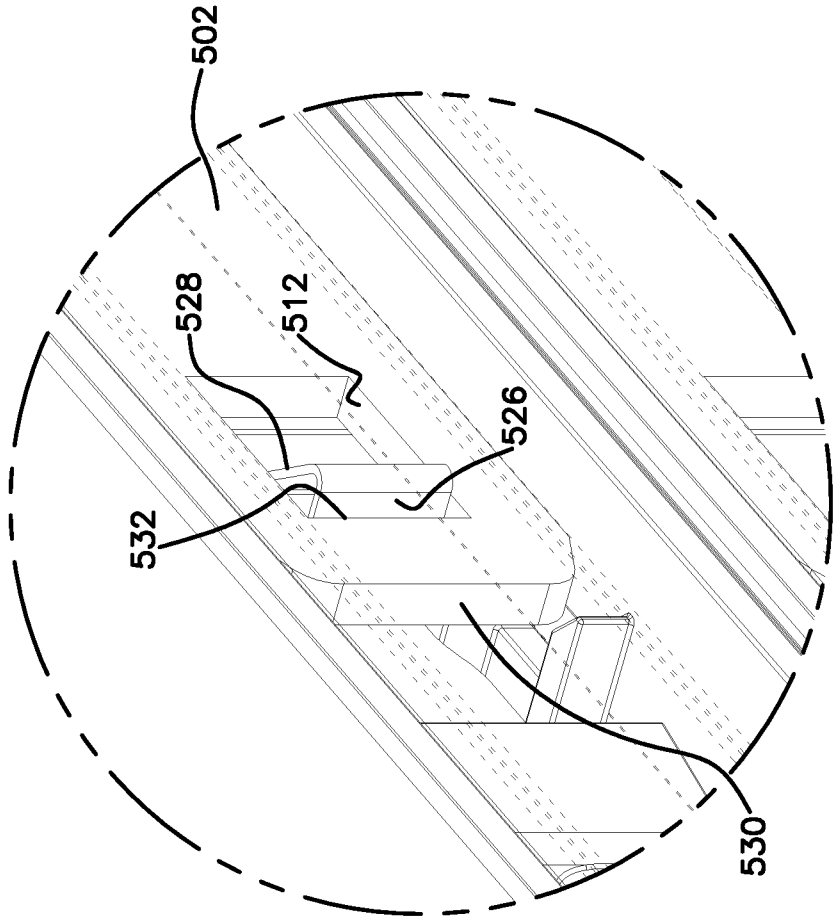

FIG. 51A

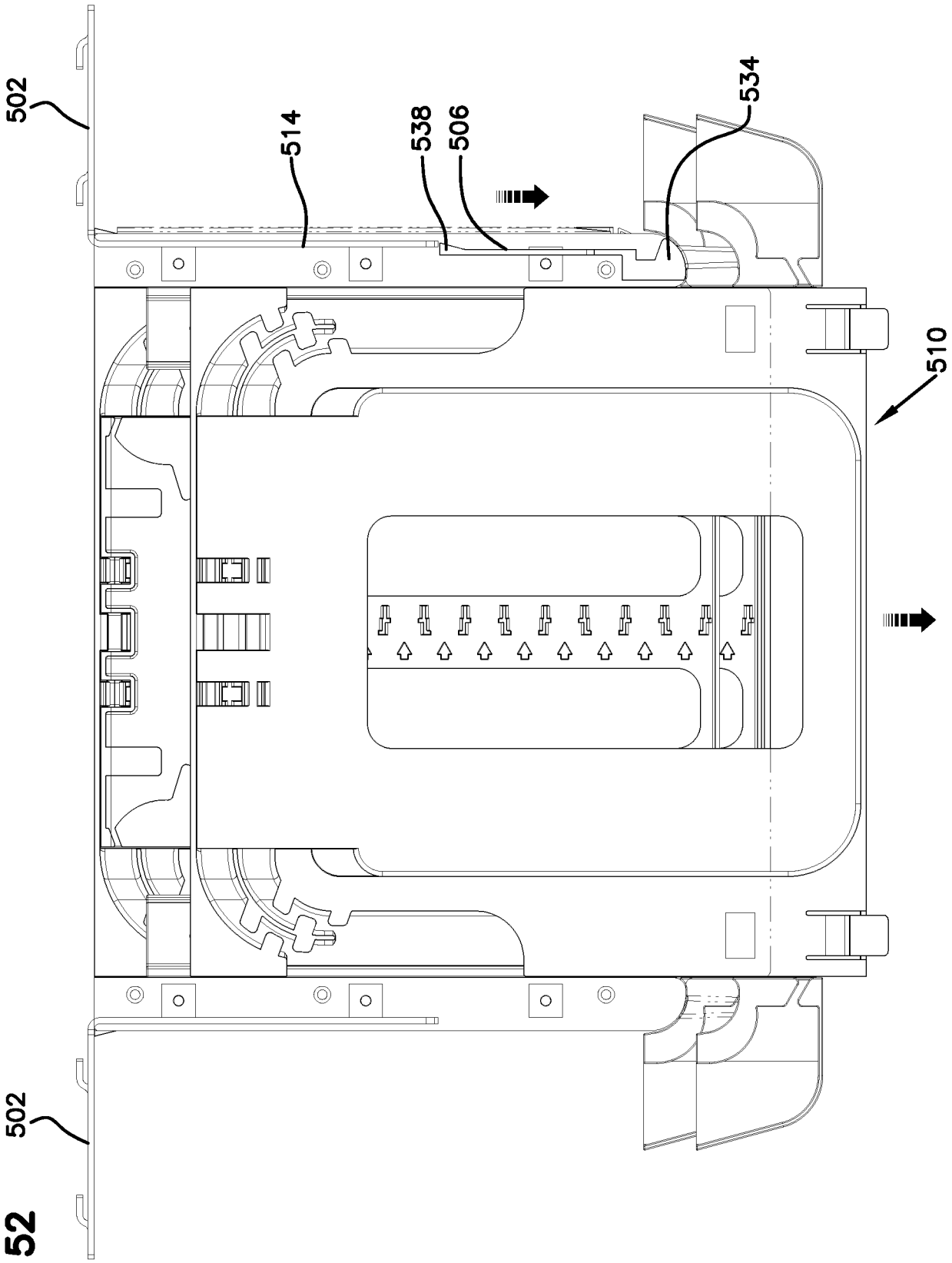

FIG. 52

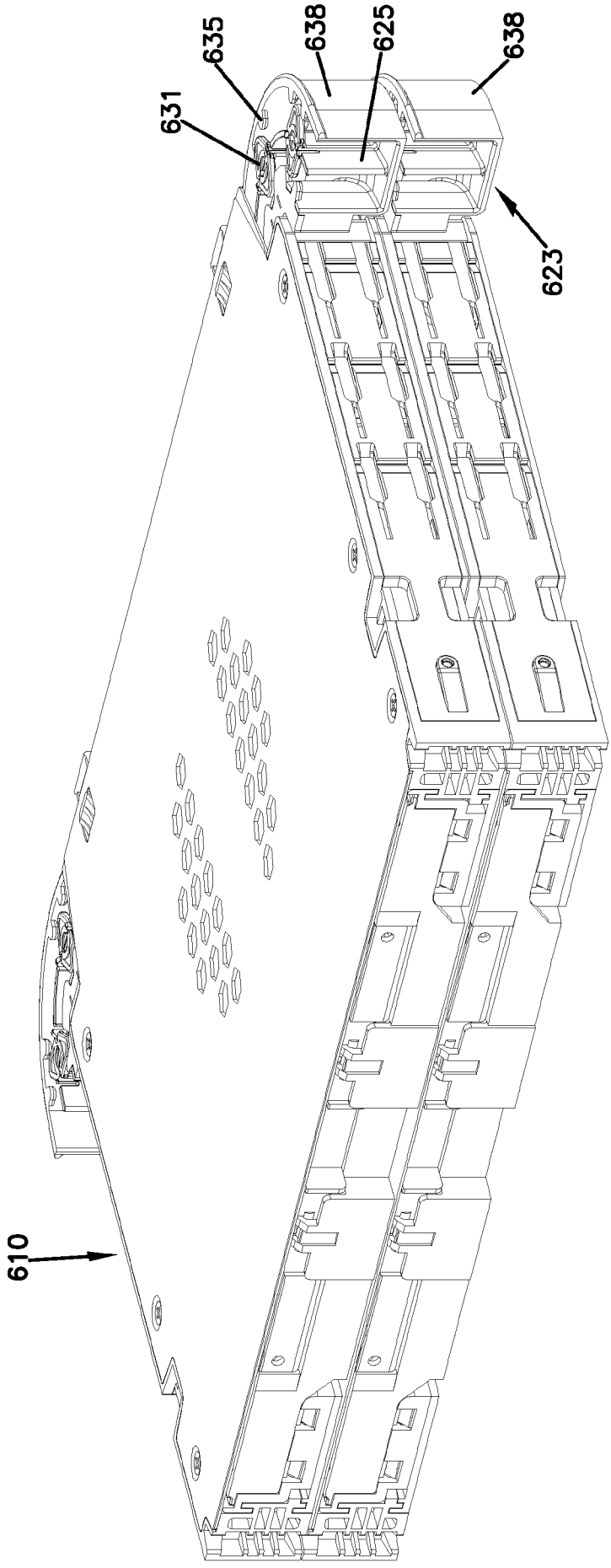

FIG. 53

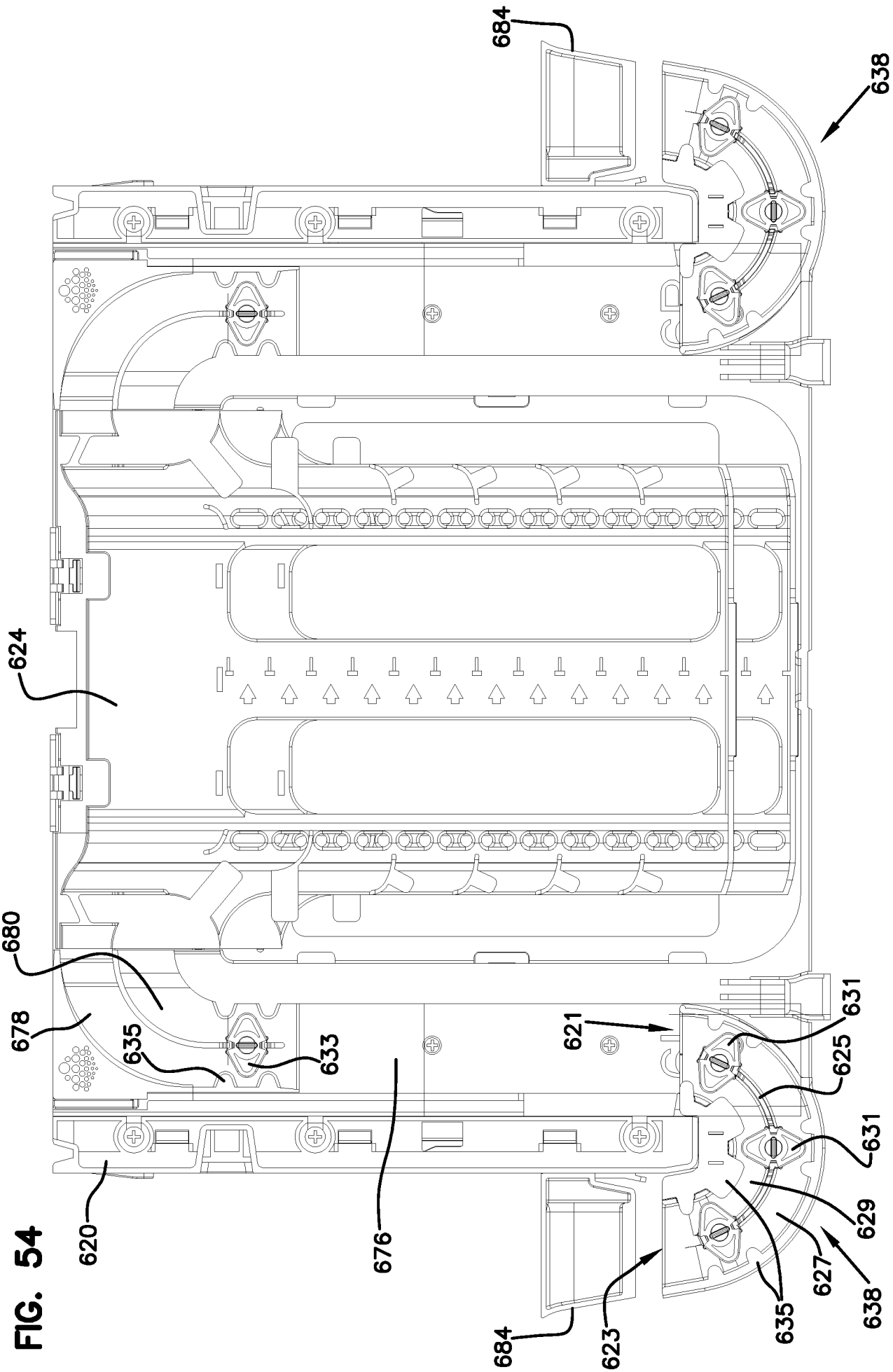
684
638
624
680
678
635
633
676
620
621
631
625
631
629
627
638
635
623
684

FIG. 54

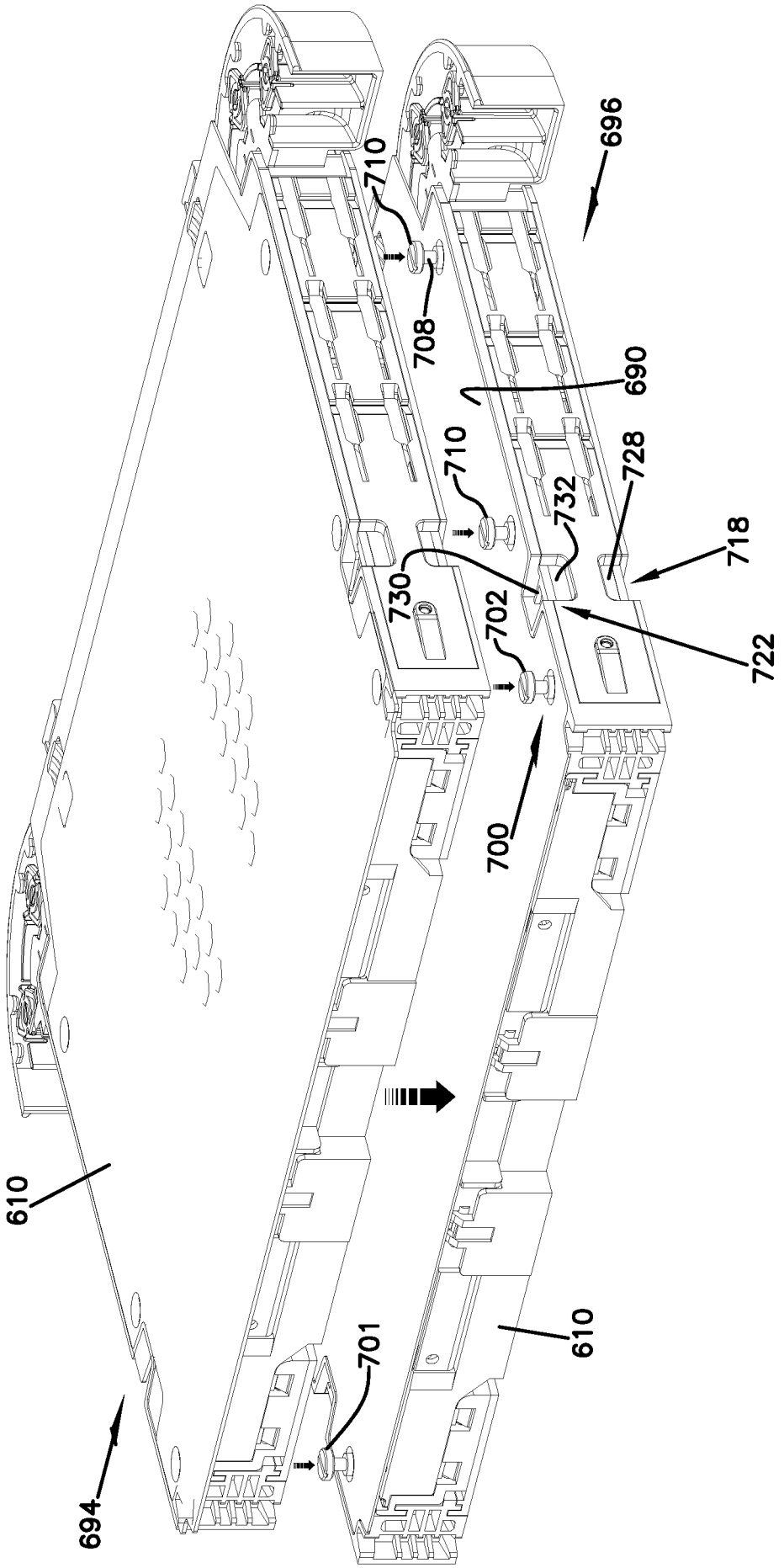

FIG. 55

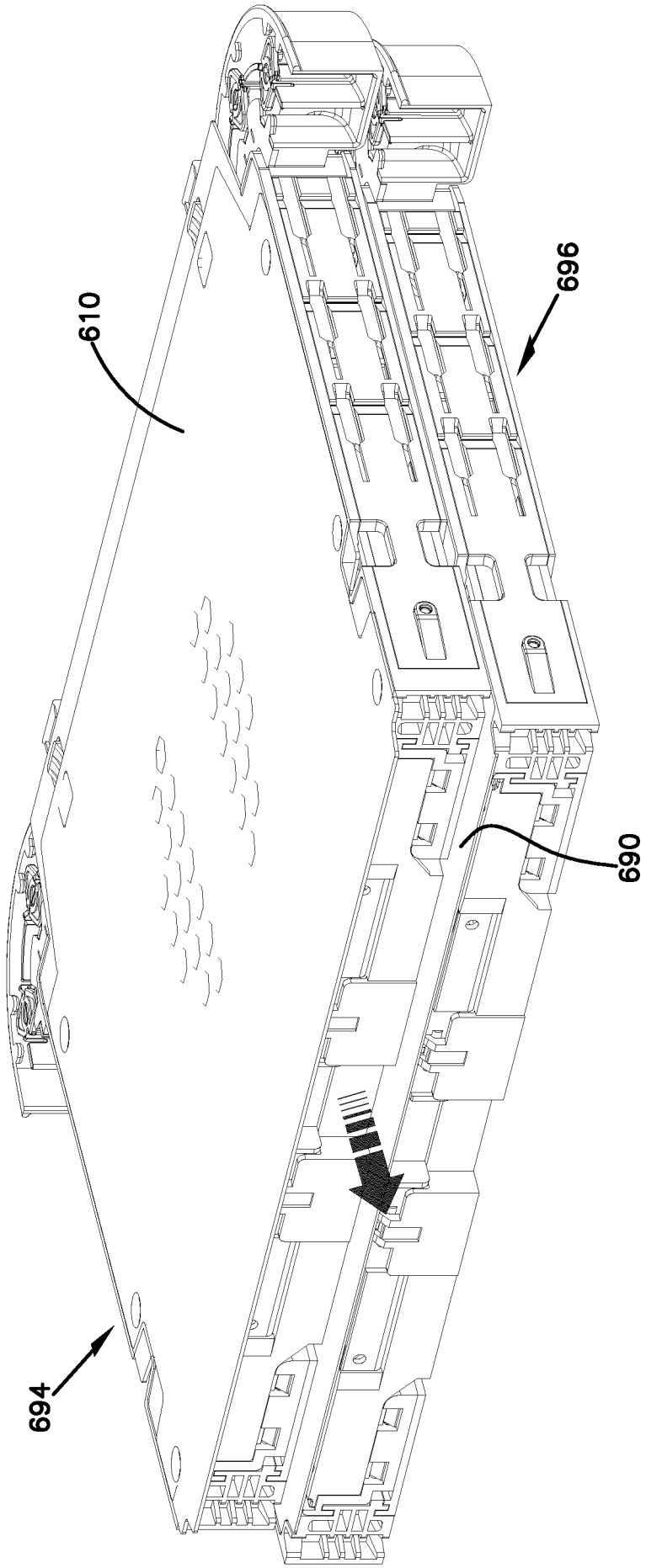

FIG. 56

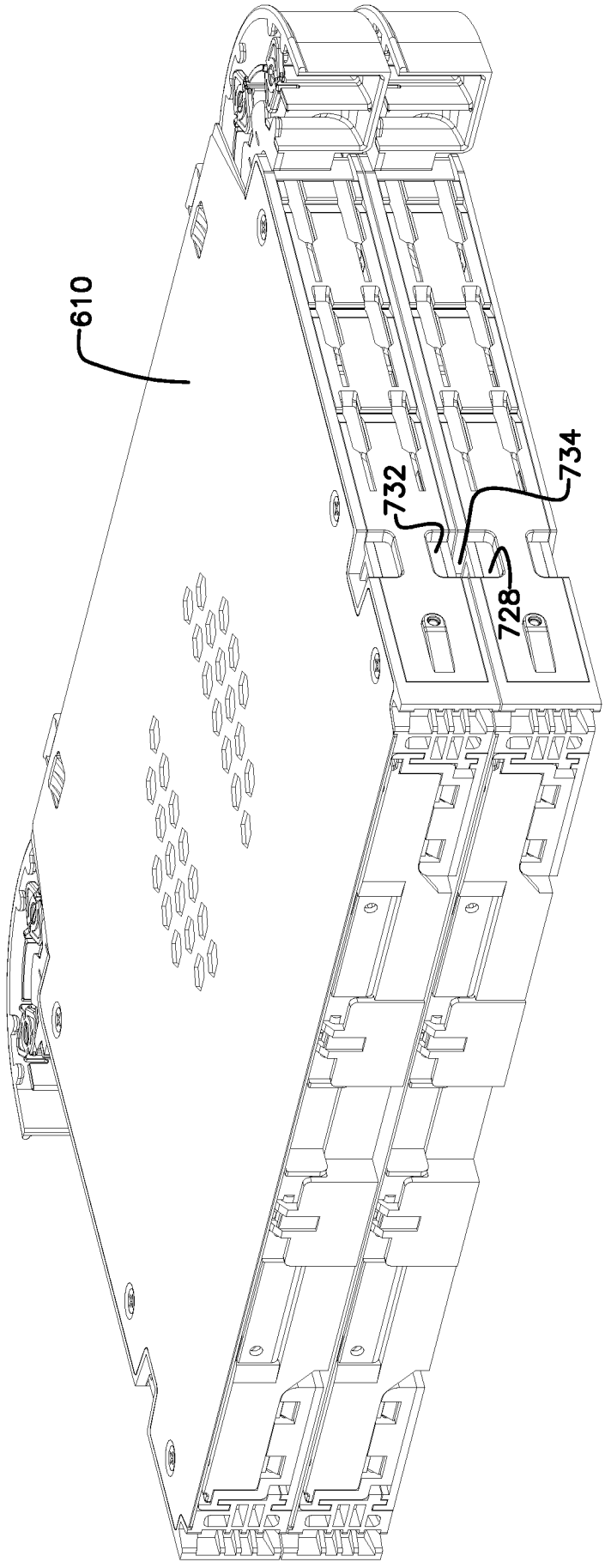

FIG. 57

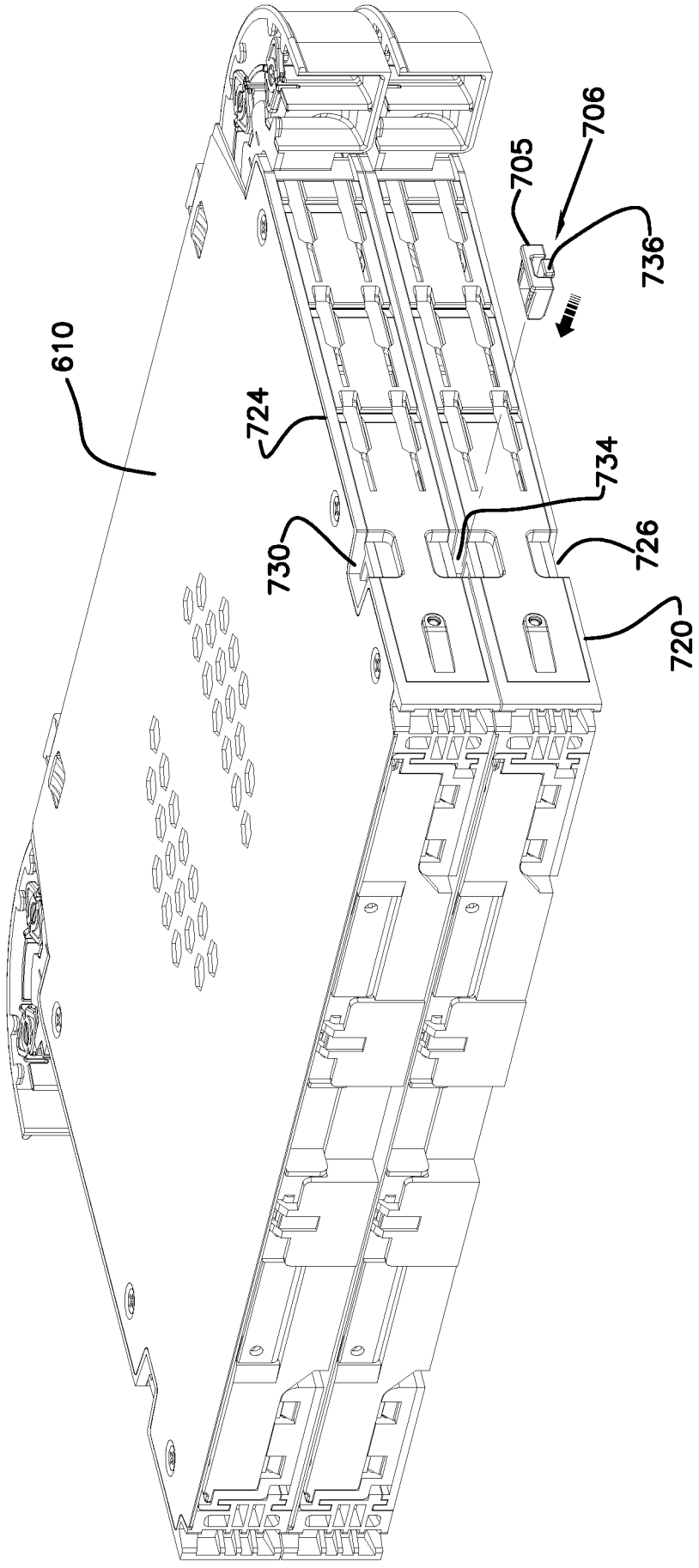

FIG. 58

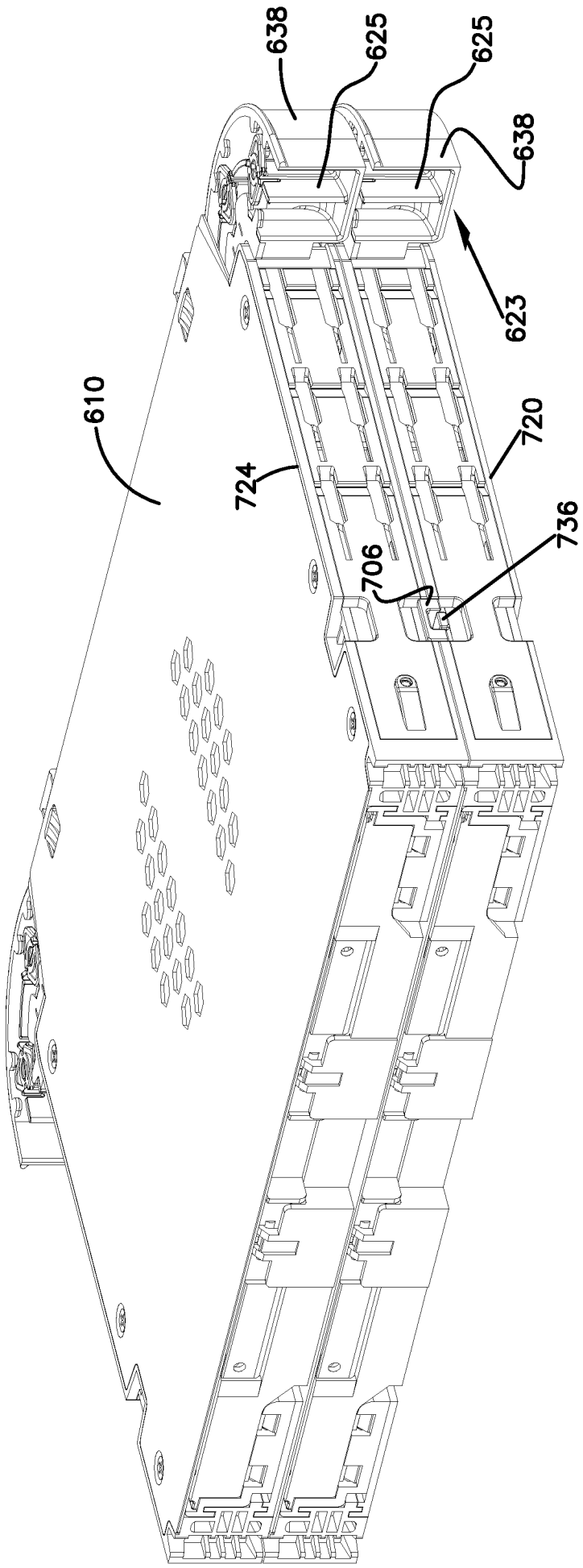

FIG. 59

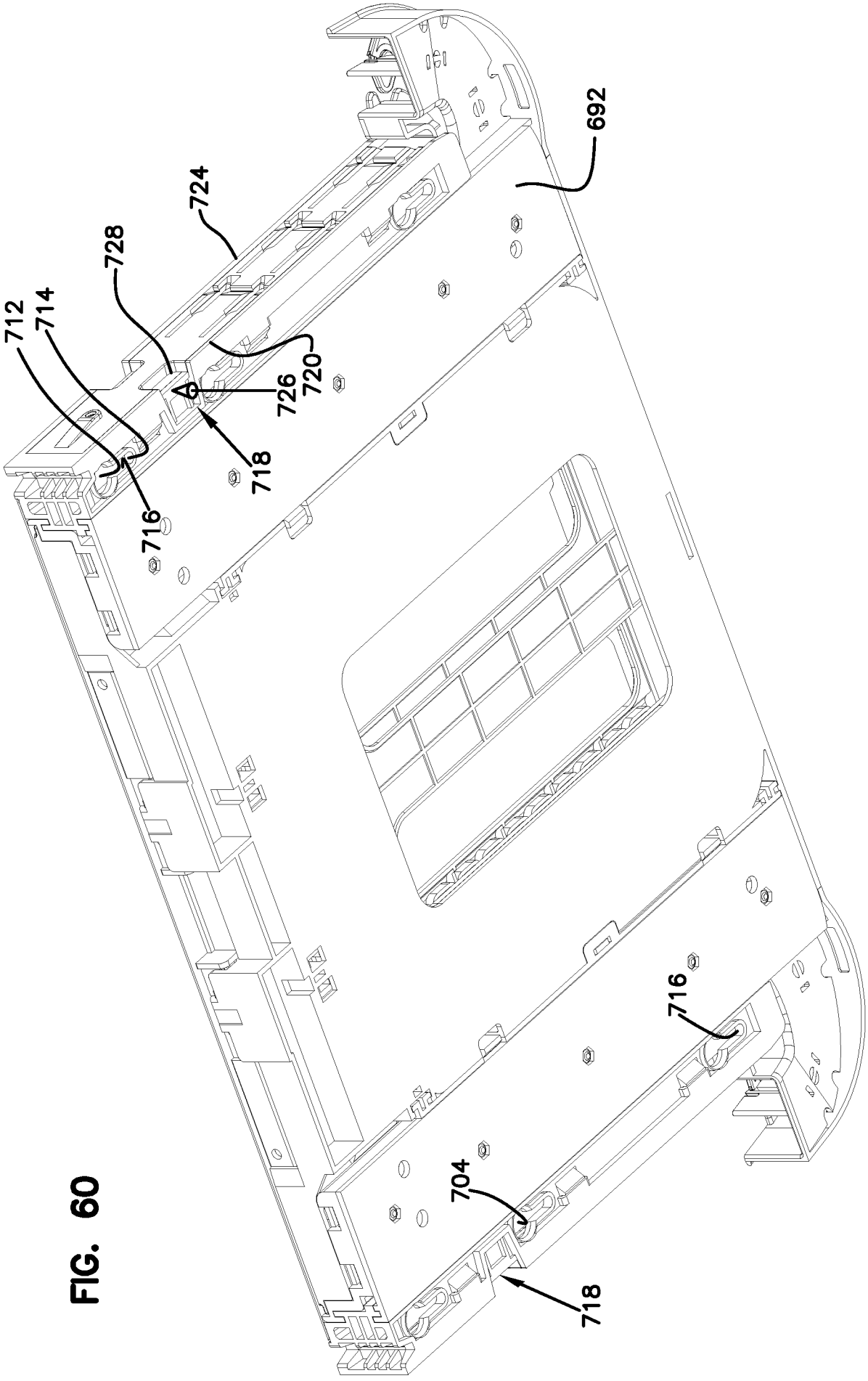

FIG. 60

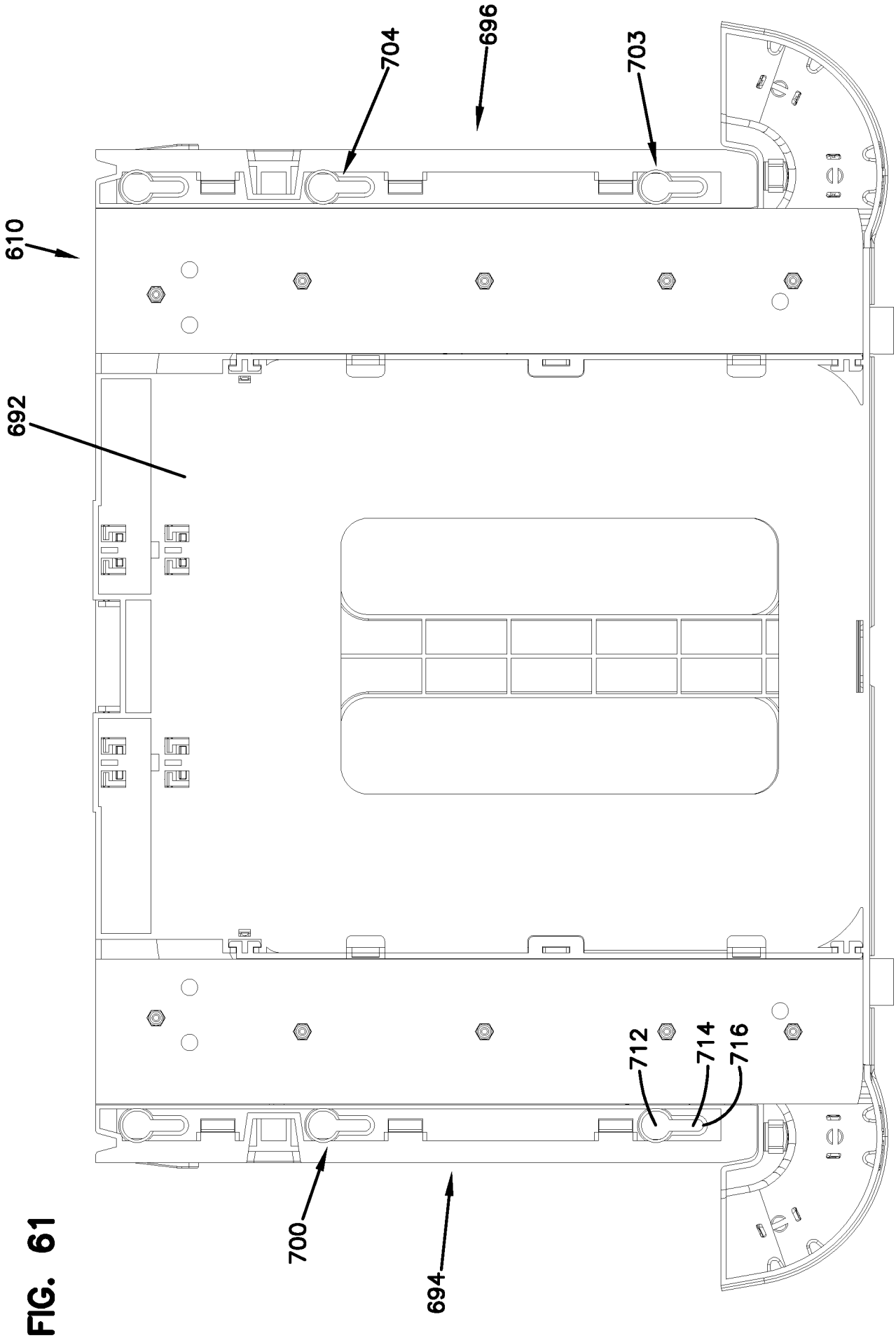

FIG. 61

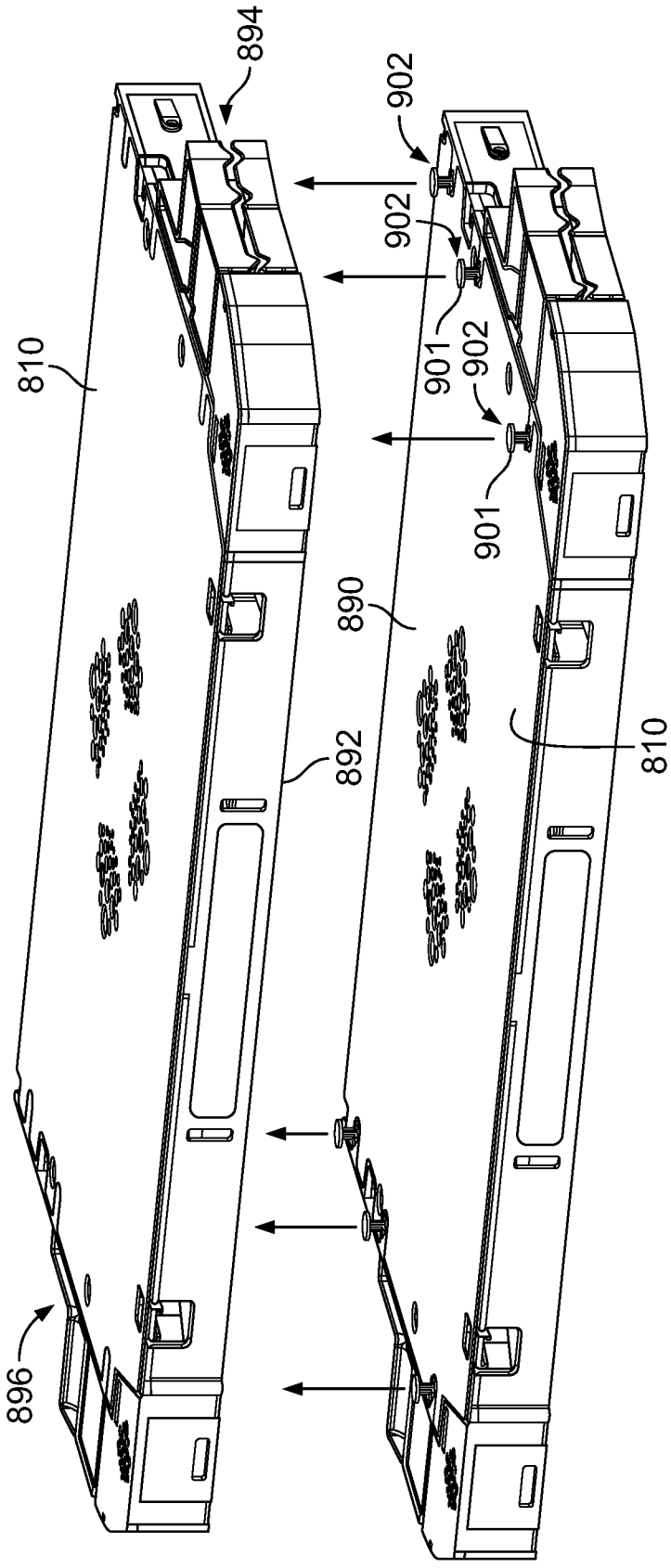

FIG. 62

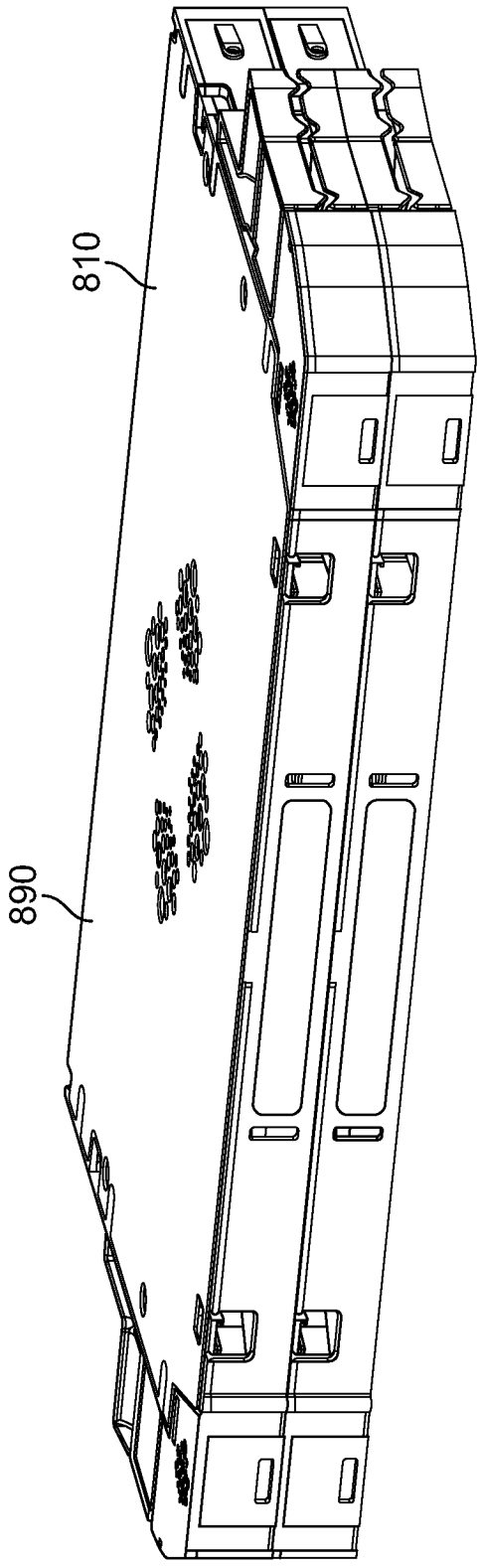

FIG. 63

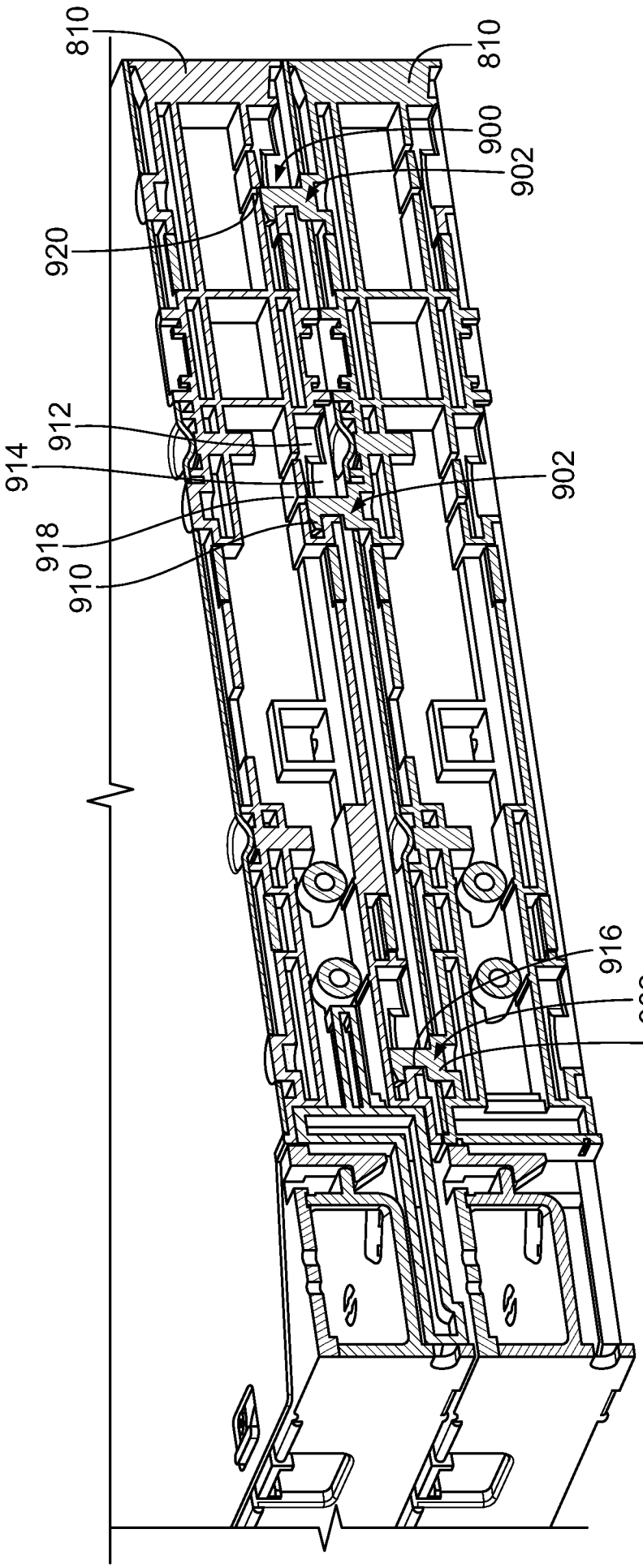

FIG. 64

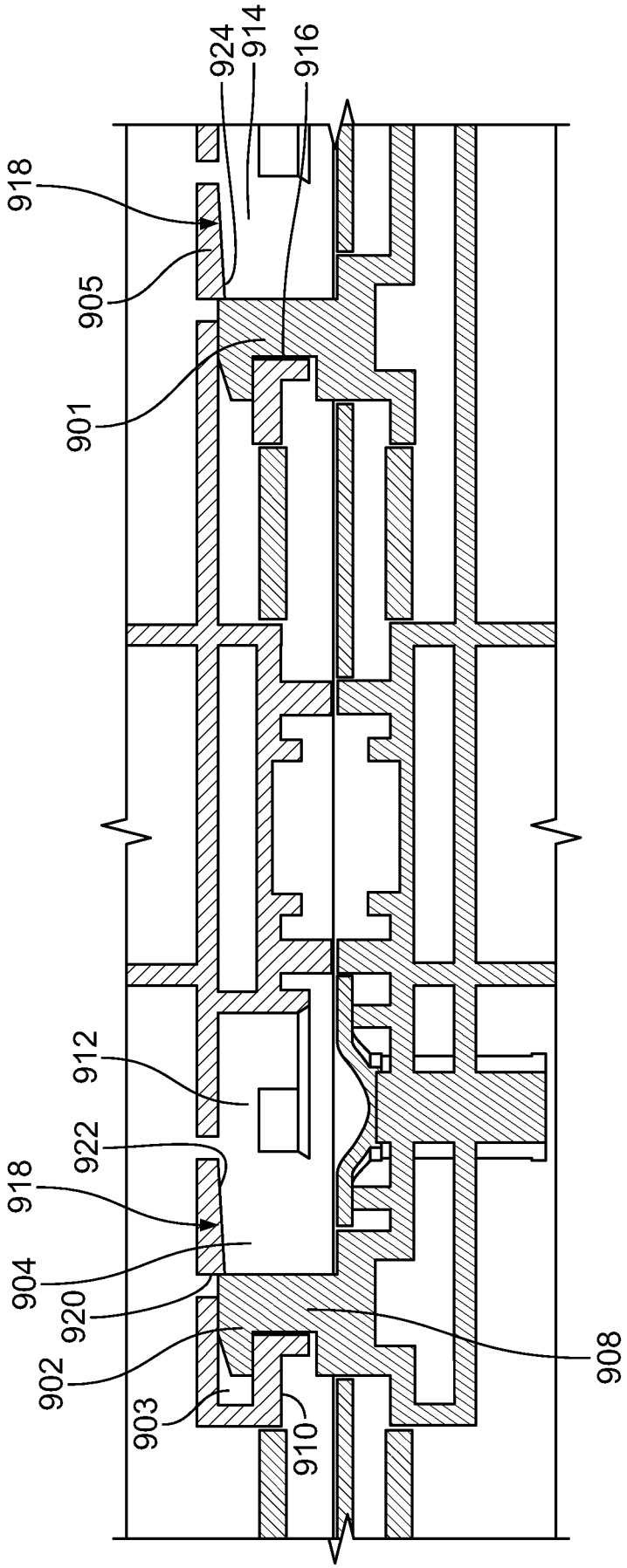

FIG. 65

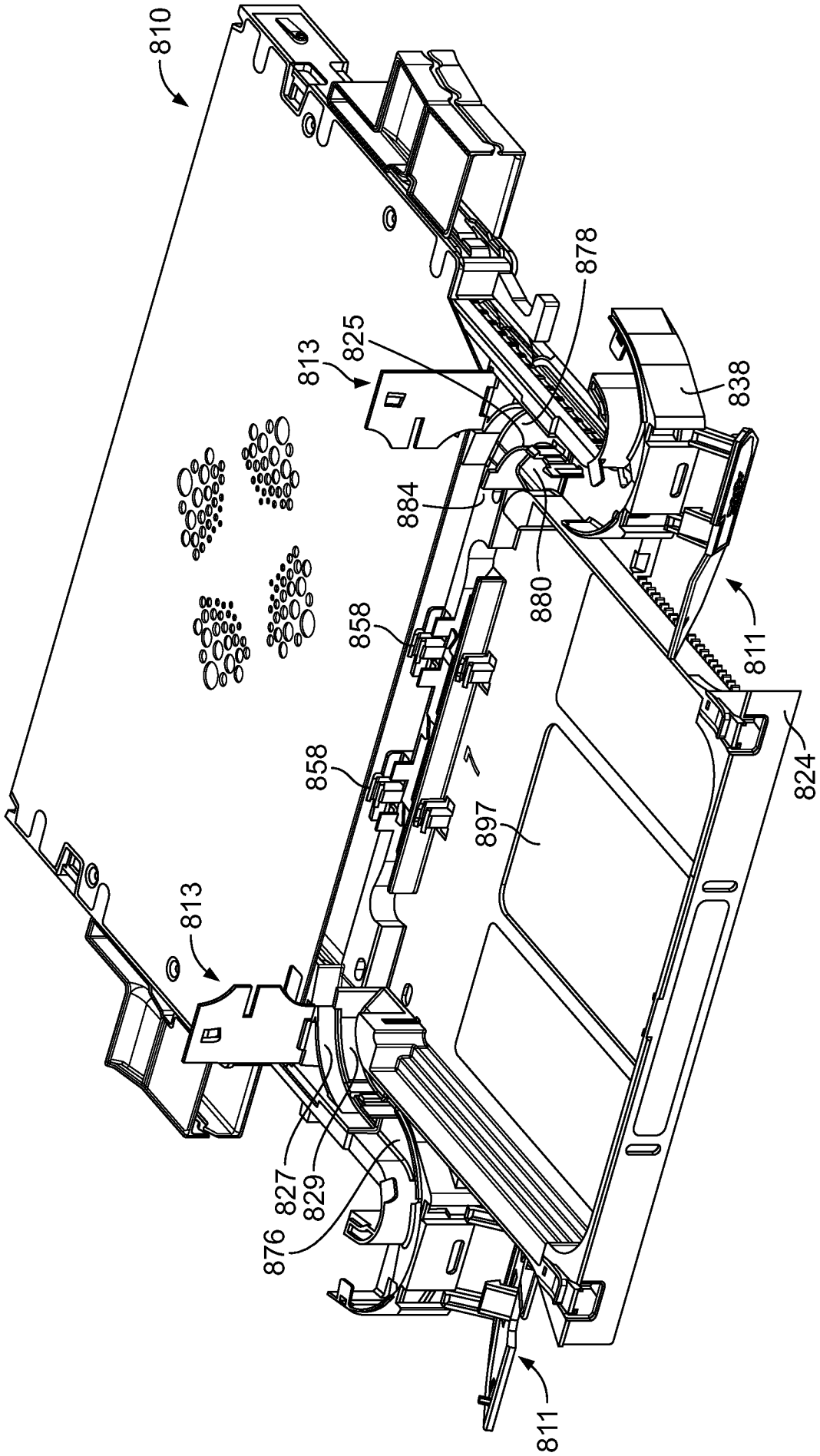
810
878
825
813
838
884
880
858
811
858
824
897
813
827
829
876
811

FIG. 66

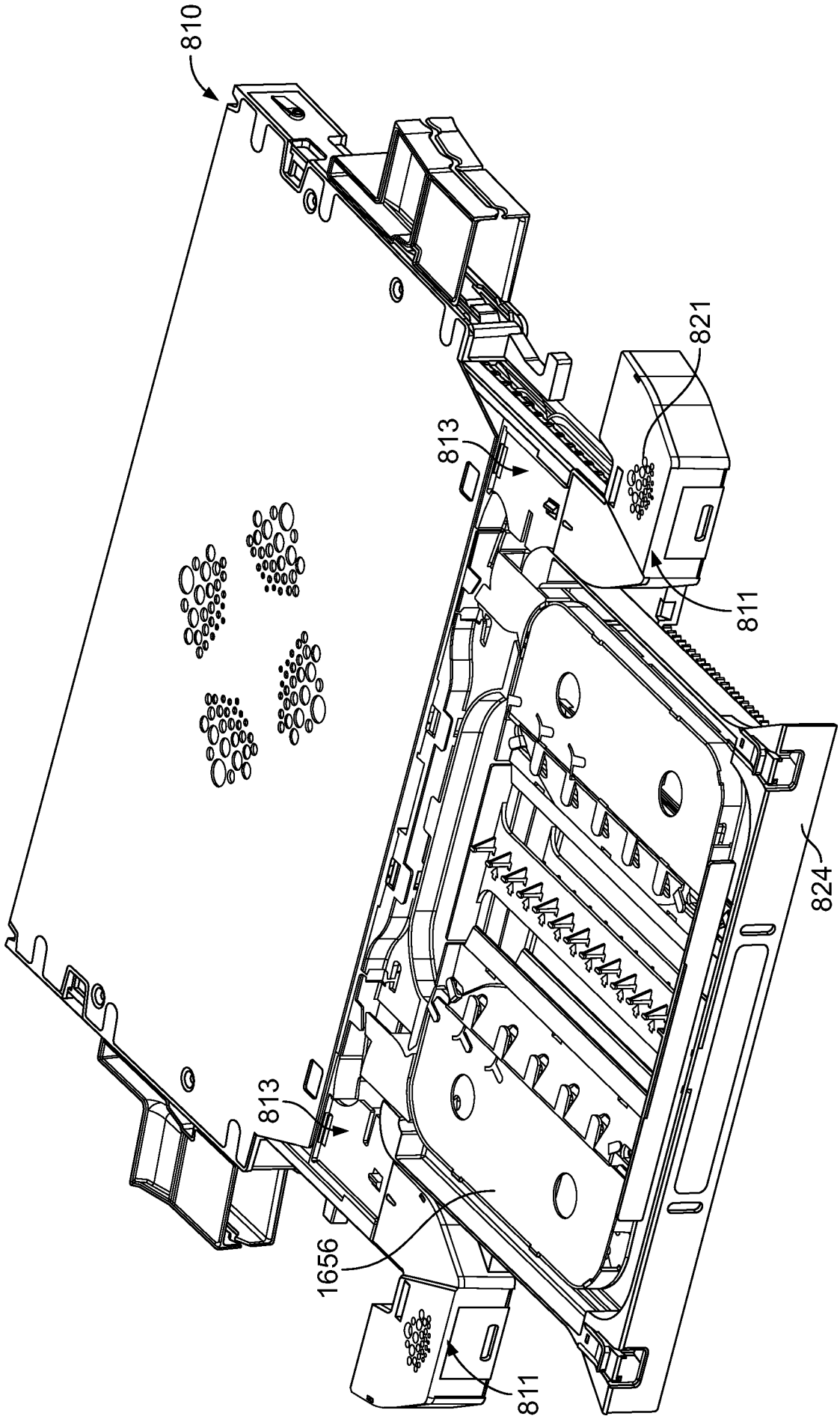

FIG. 67

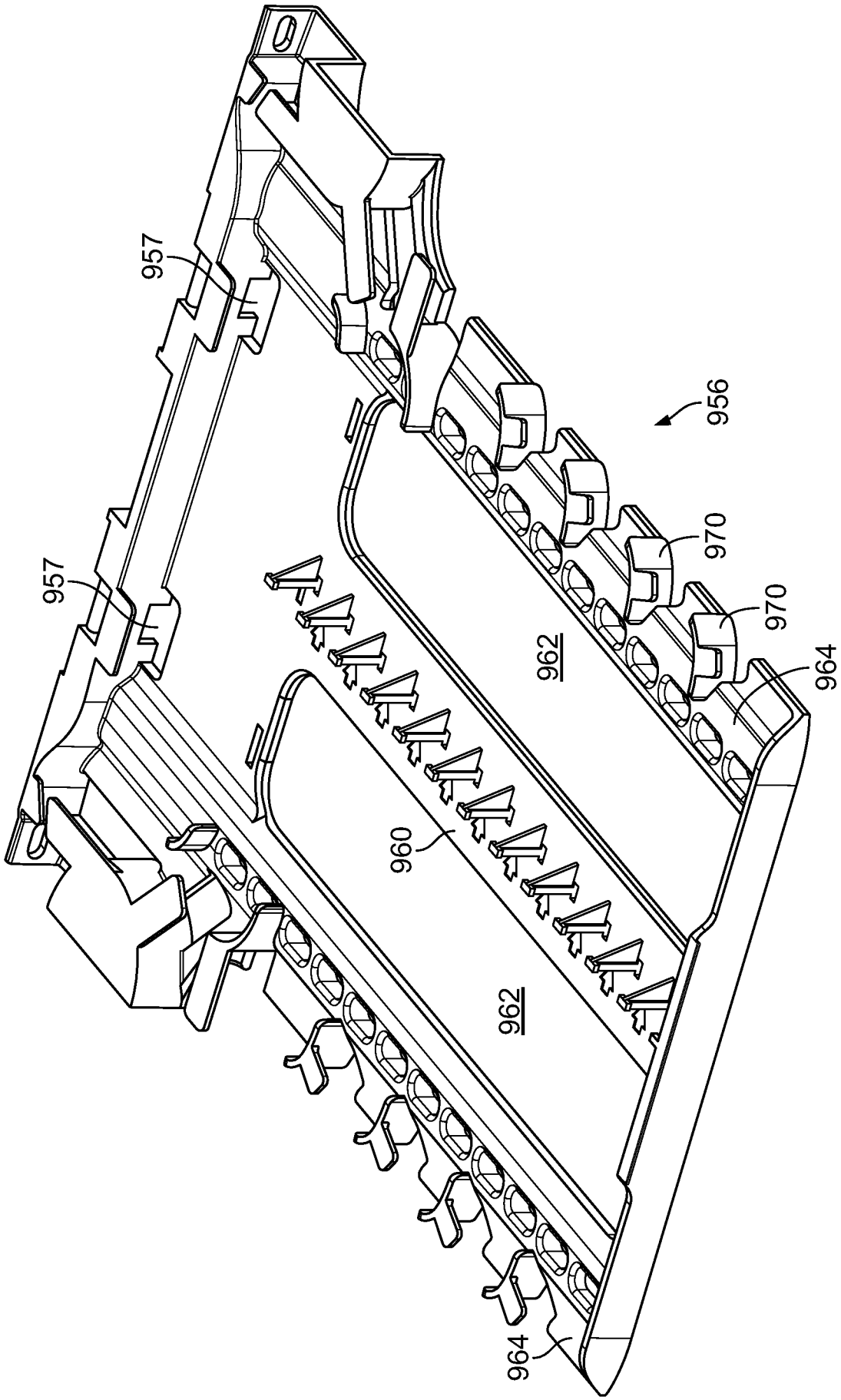

FIG. 68

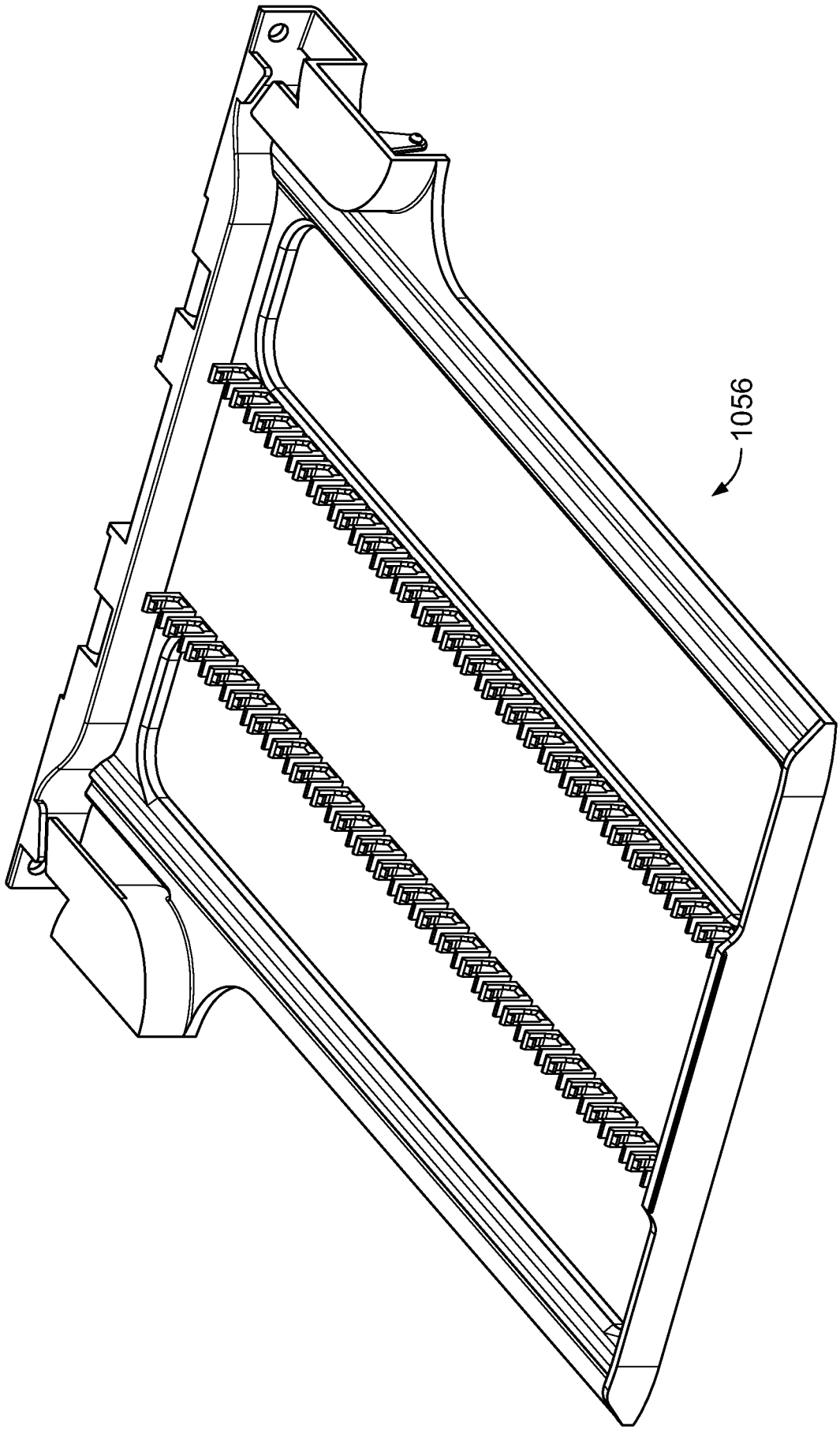

FIG. 69

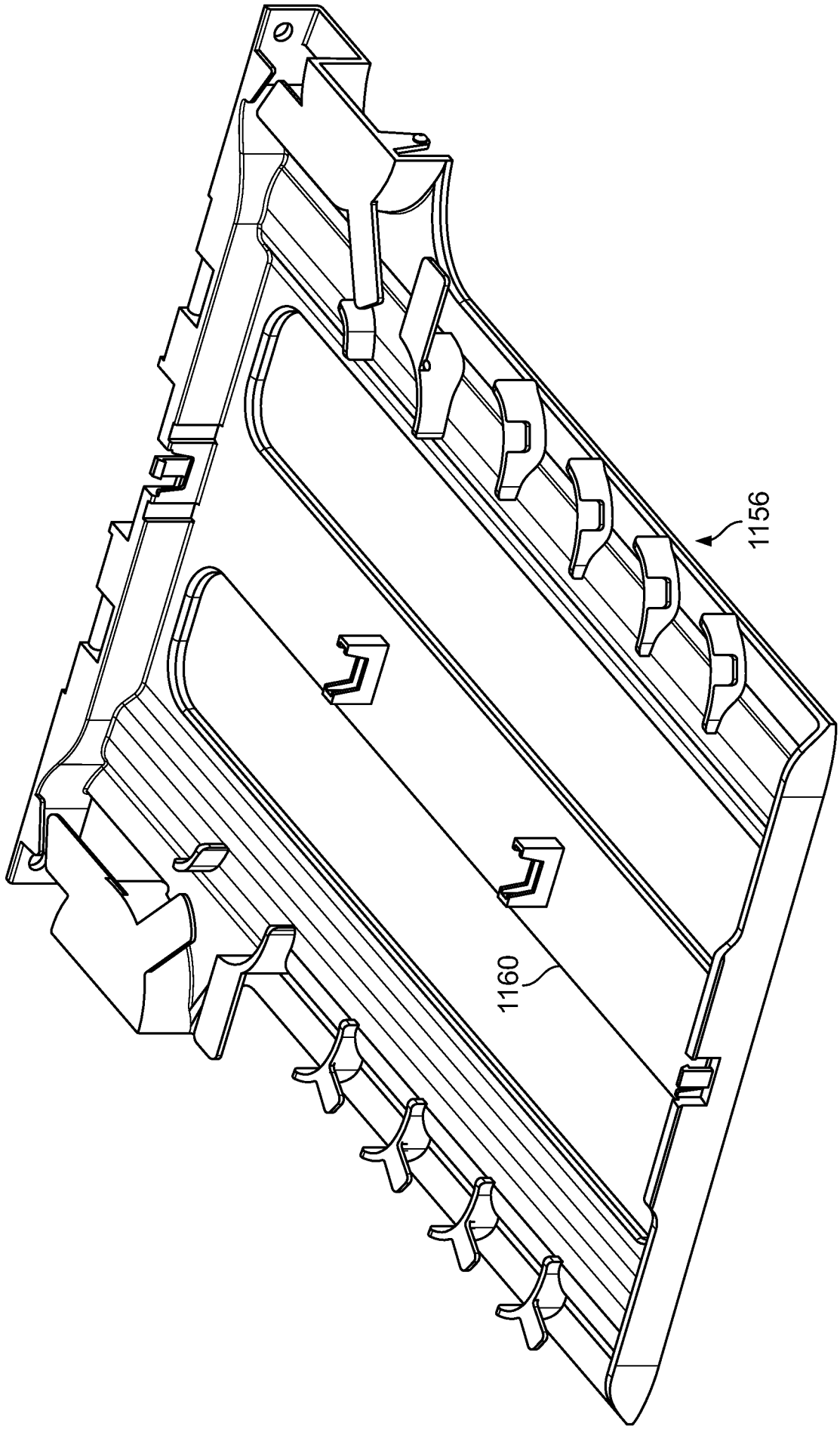

FIG. 70

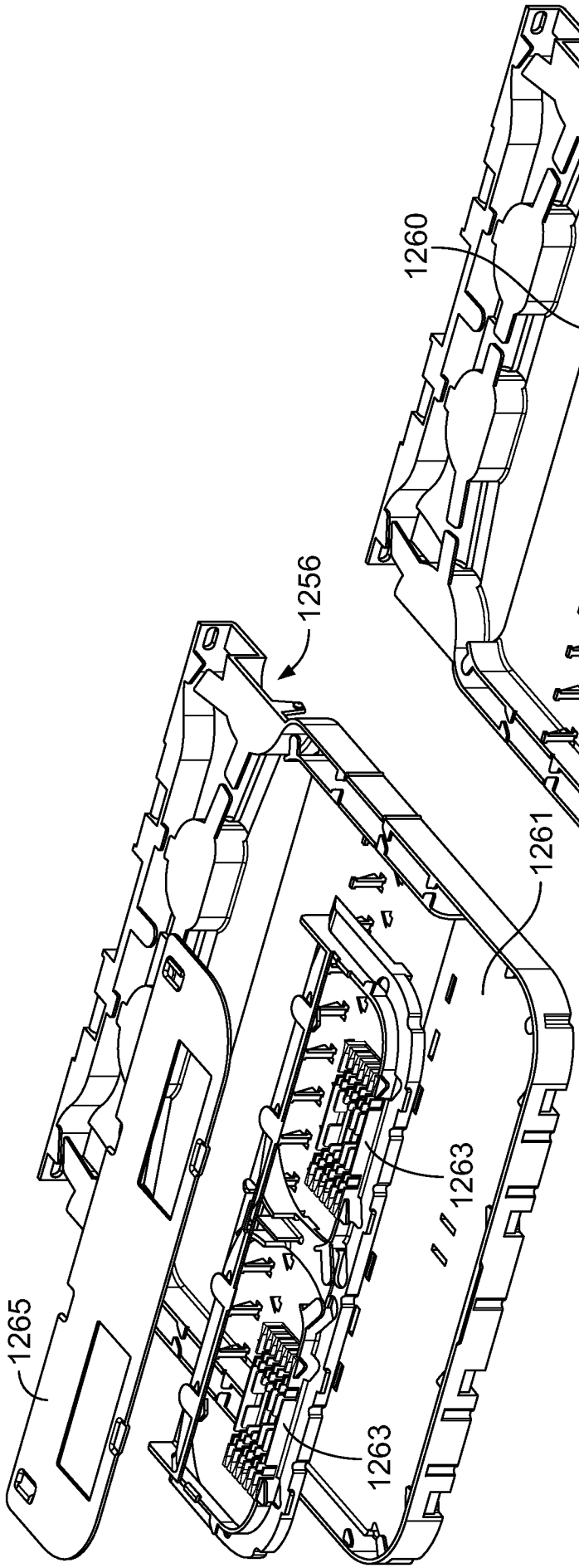

FIG. 71

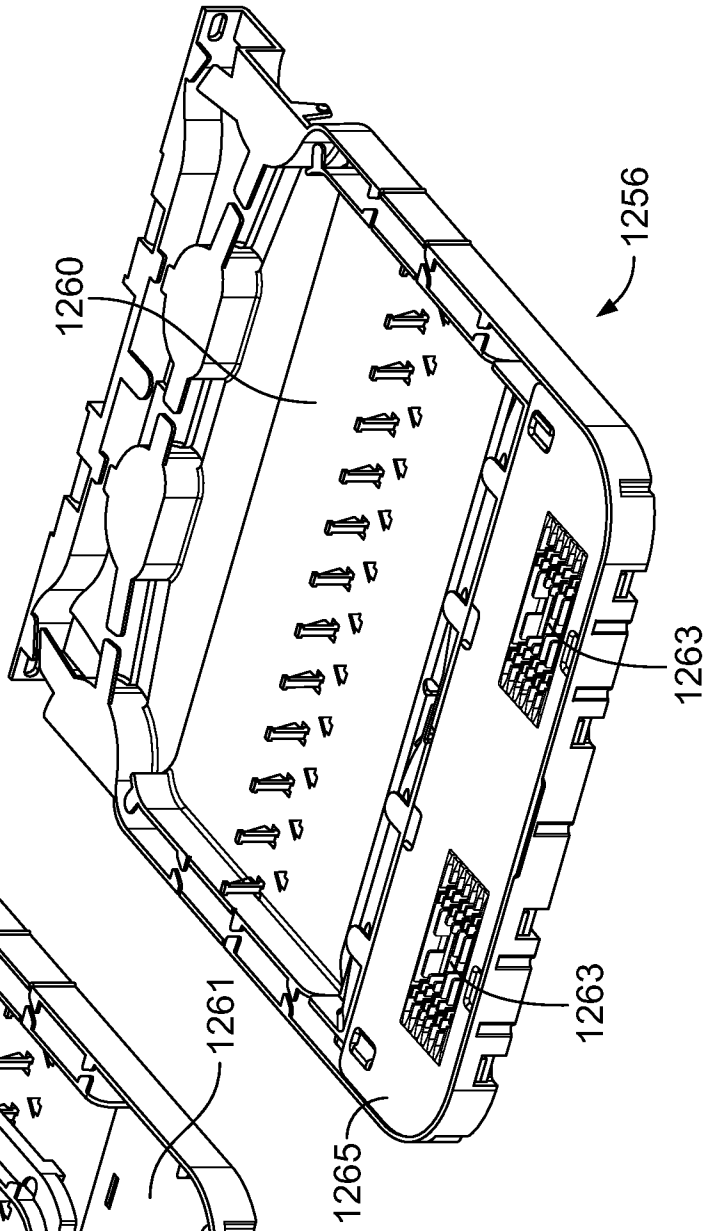

FIG. 72

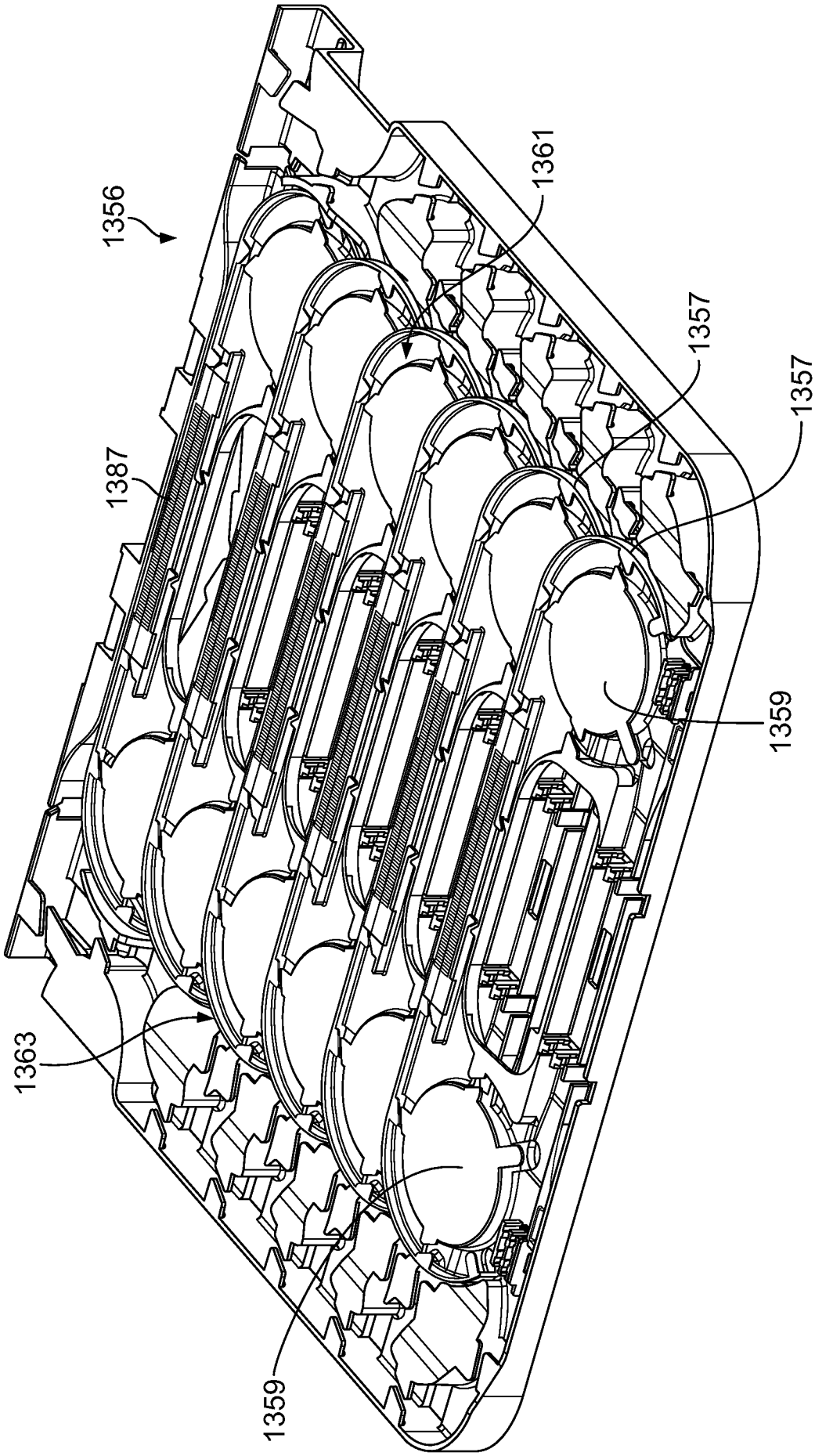

FIG. 73

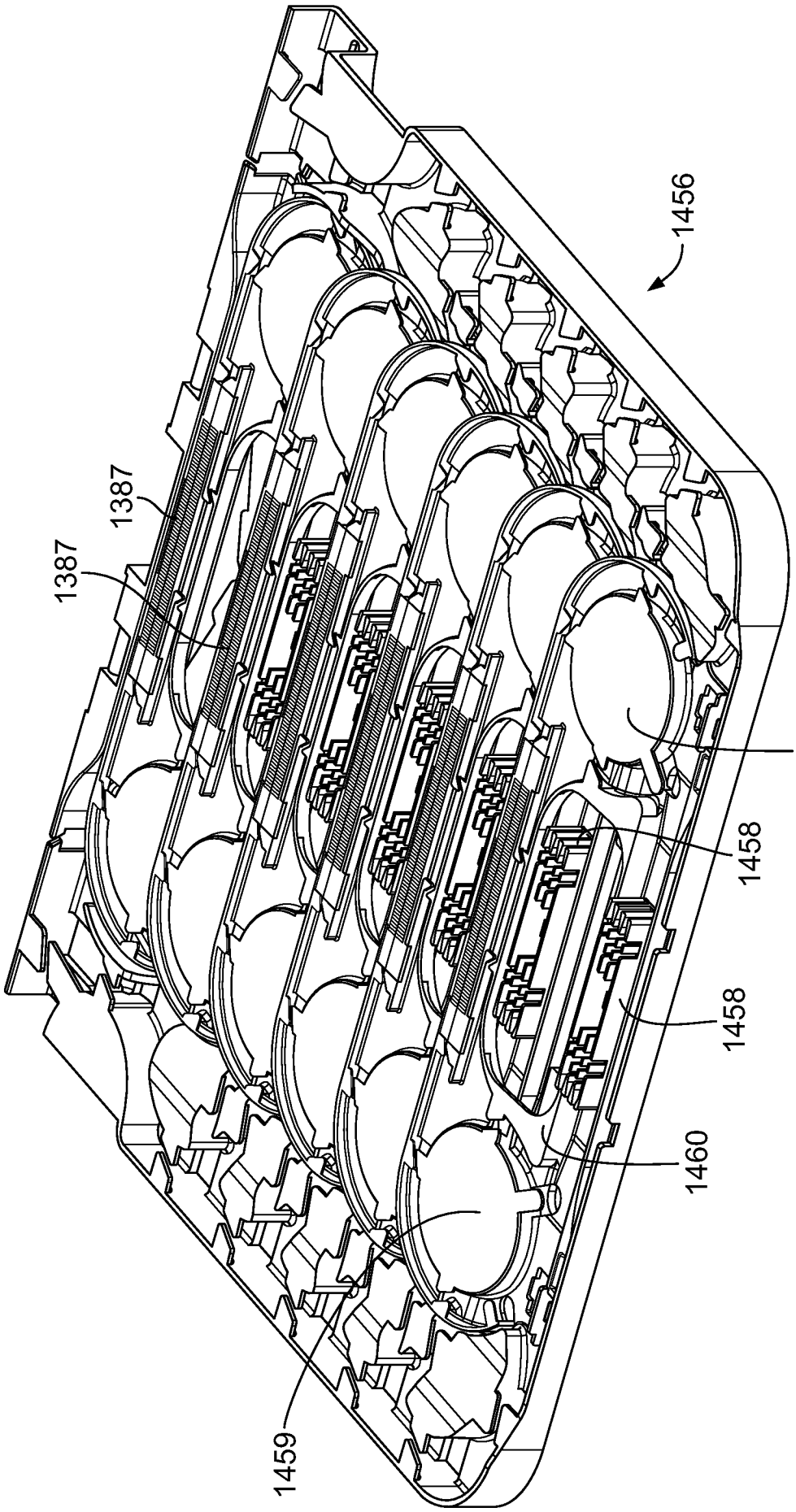

FIG. 74

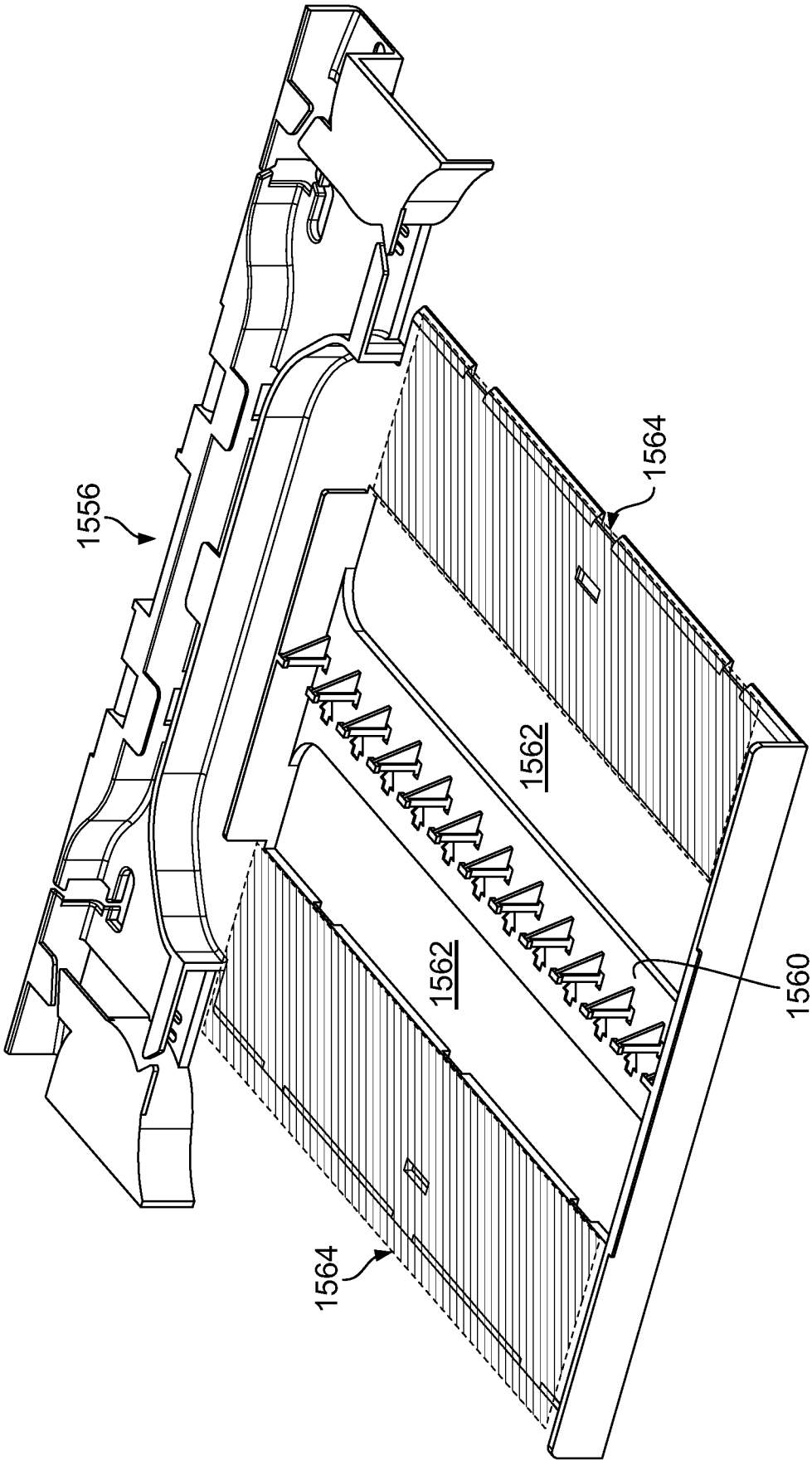

FIG. 75

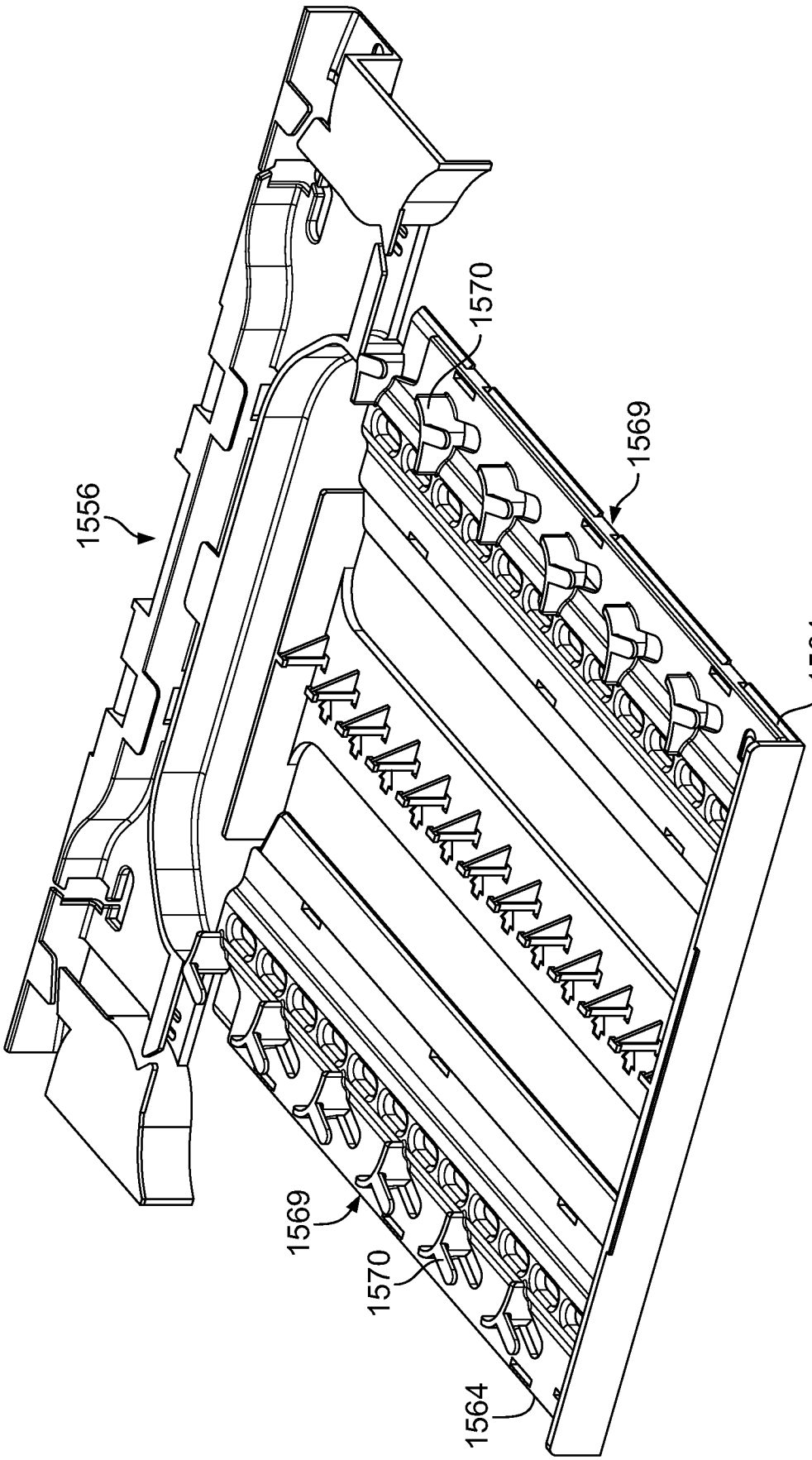

FIG. 76

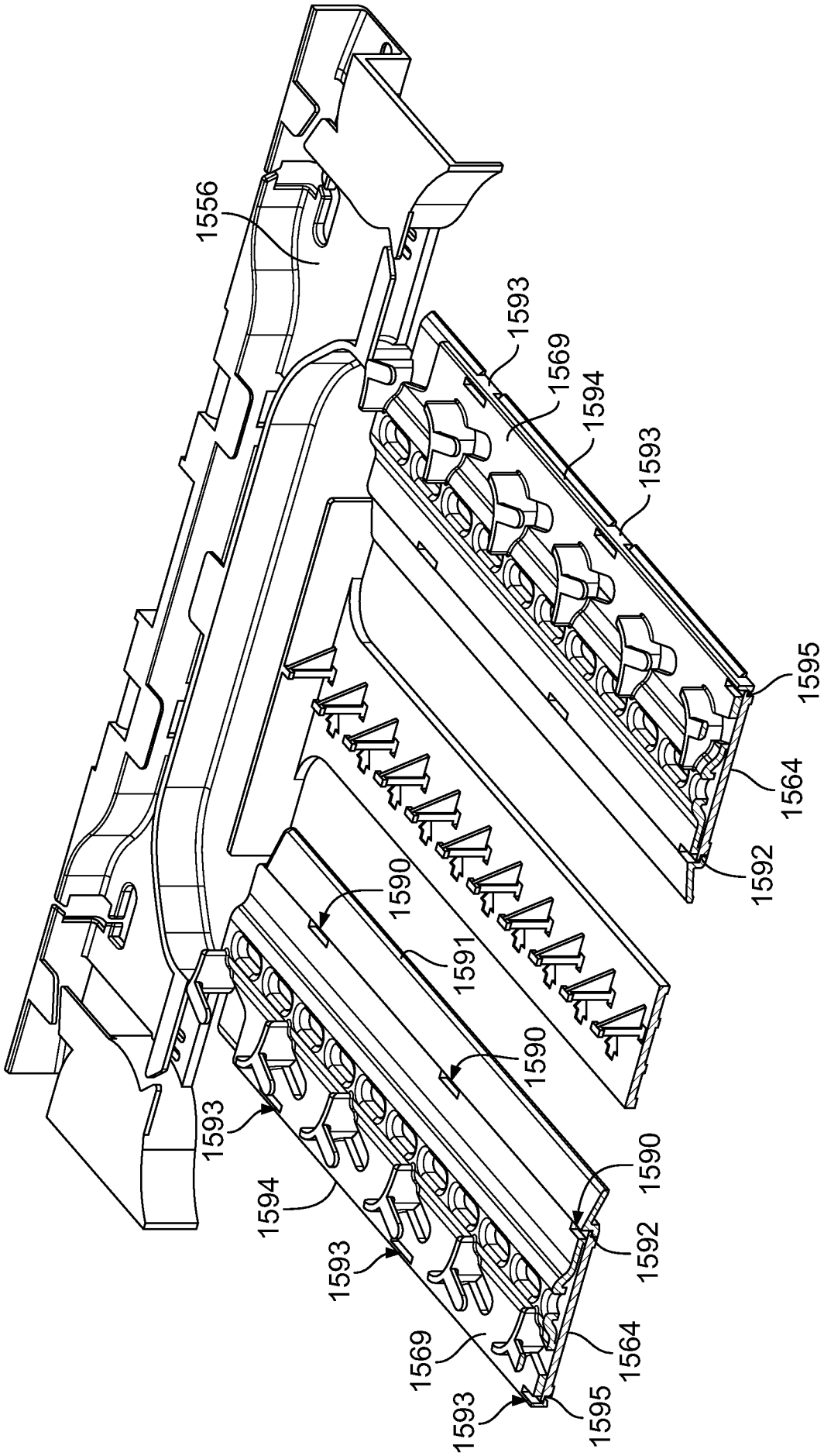
1556
1593
1569
1594
1593
1595
1564
1592
1590
1591
1590
1593
1594
1590
1593
1592
1569
1564
1593
1595

FIG. 77

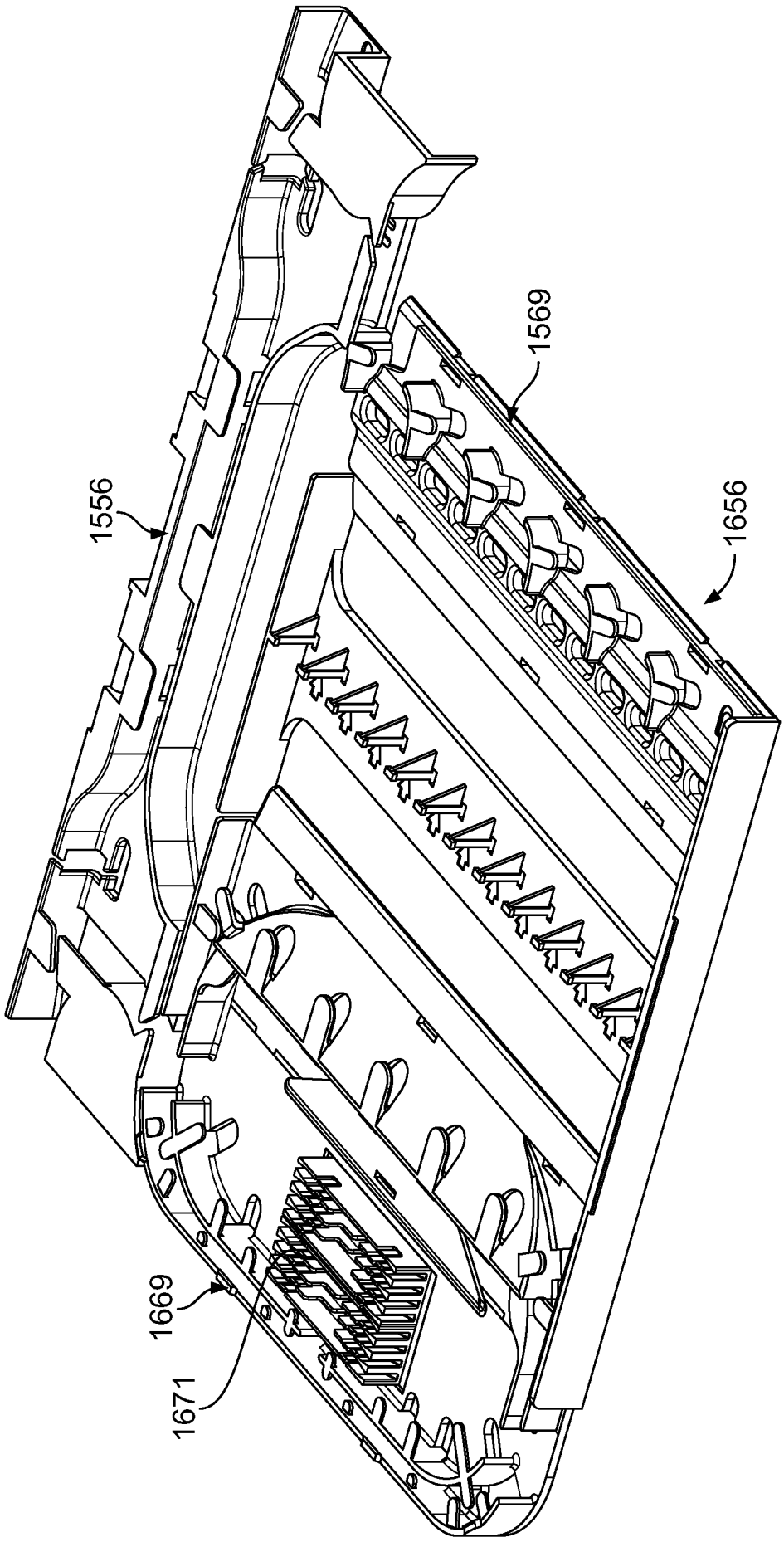

FIG. 78

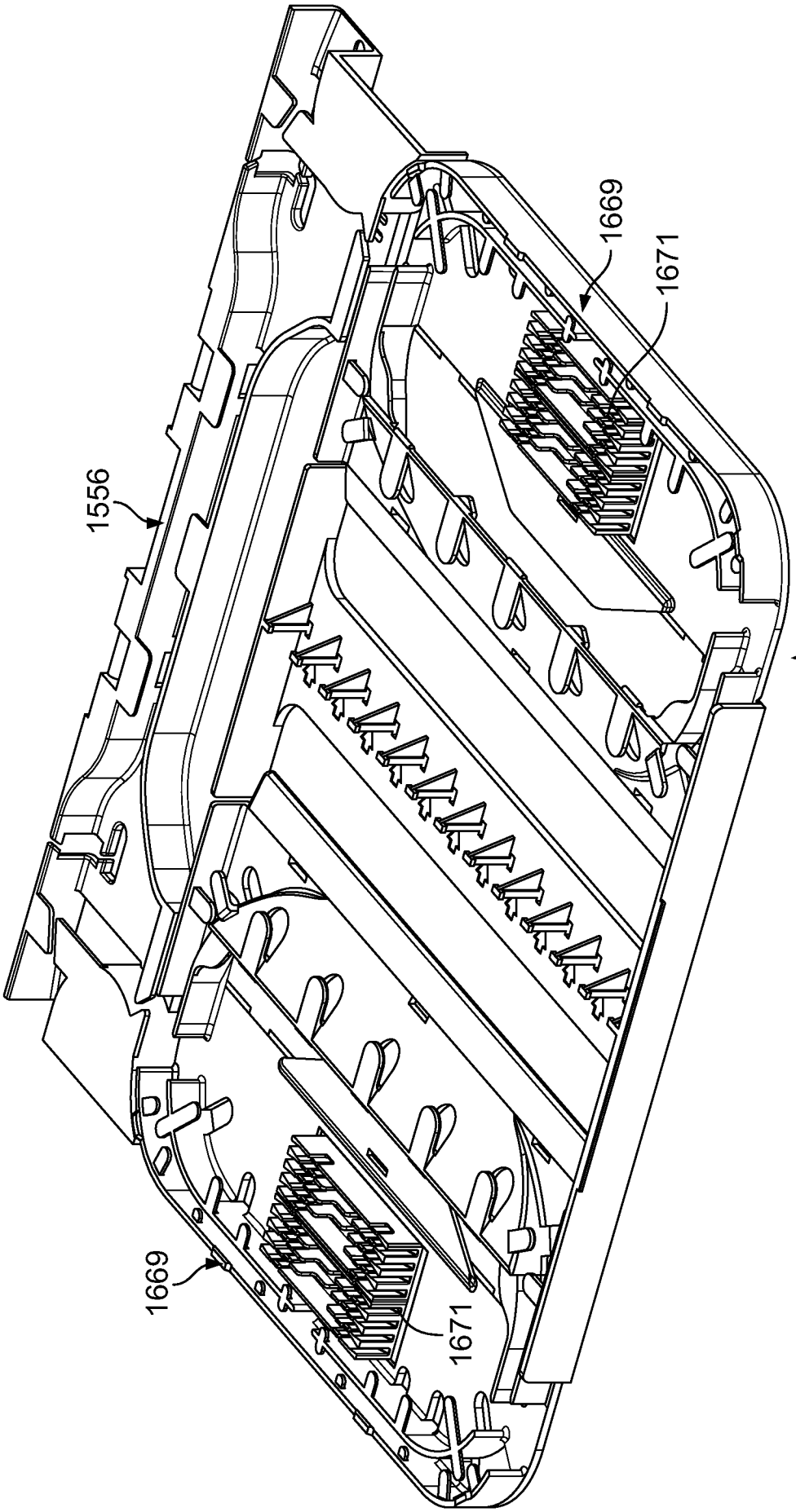

FIG. 79

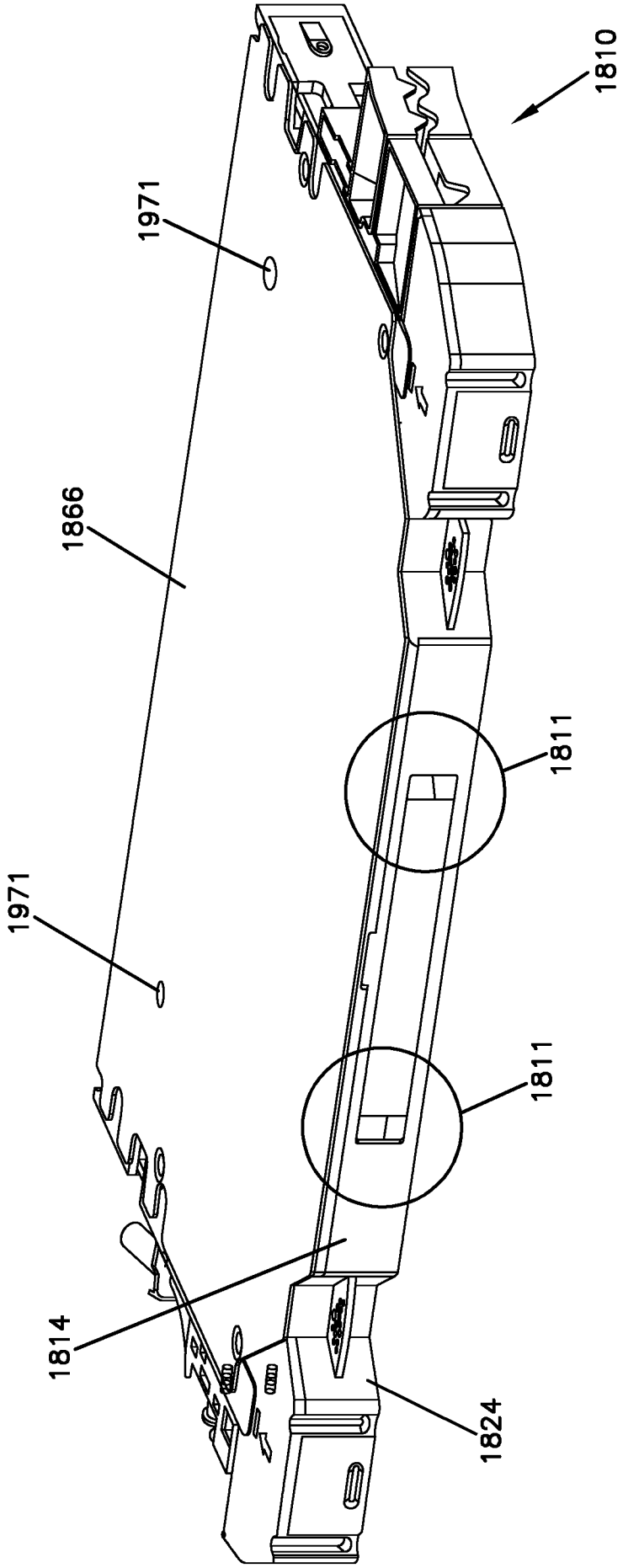

FIG. 80

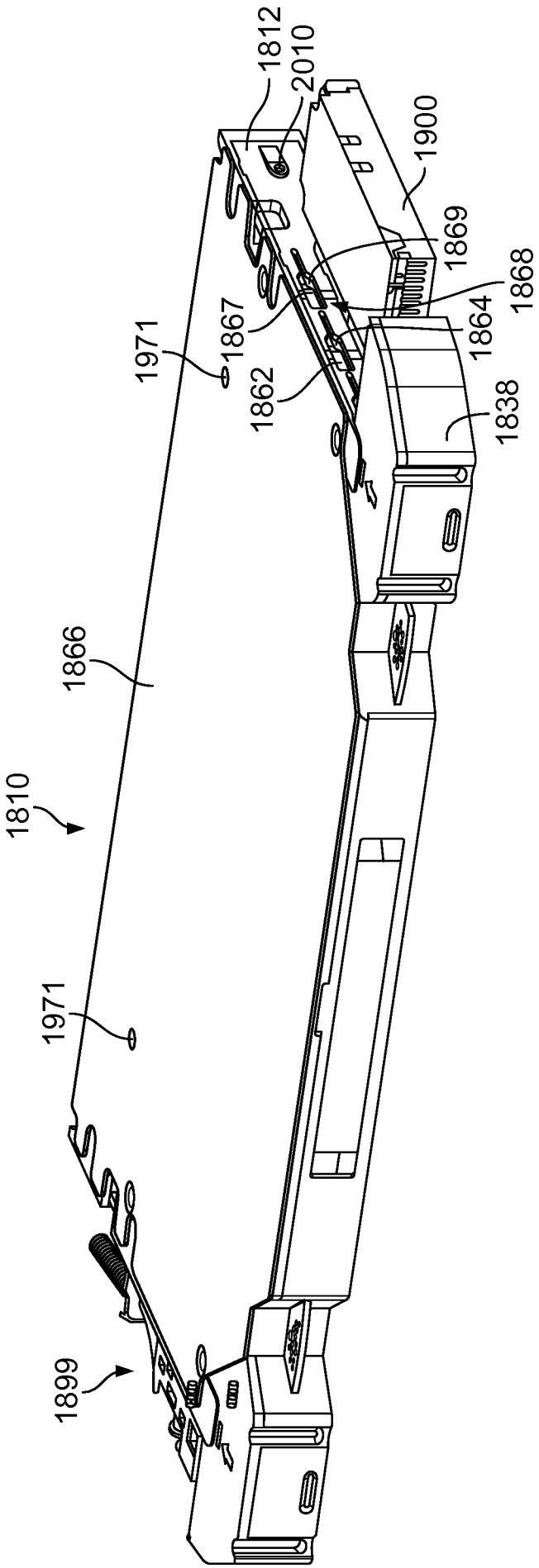
1812
2010
1900
1869
1868
1867
1864
1971
1862
1838
1866
1810
1971
1899

FIG. 81

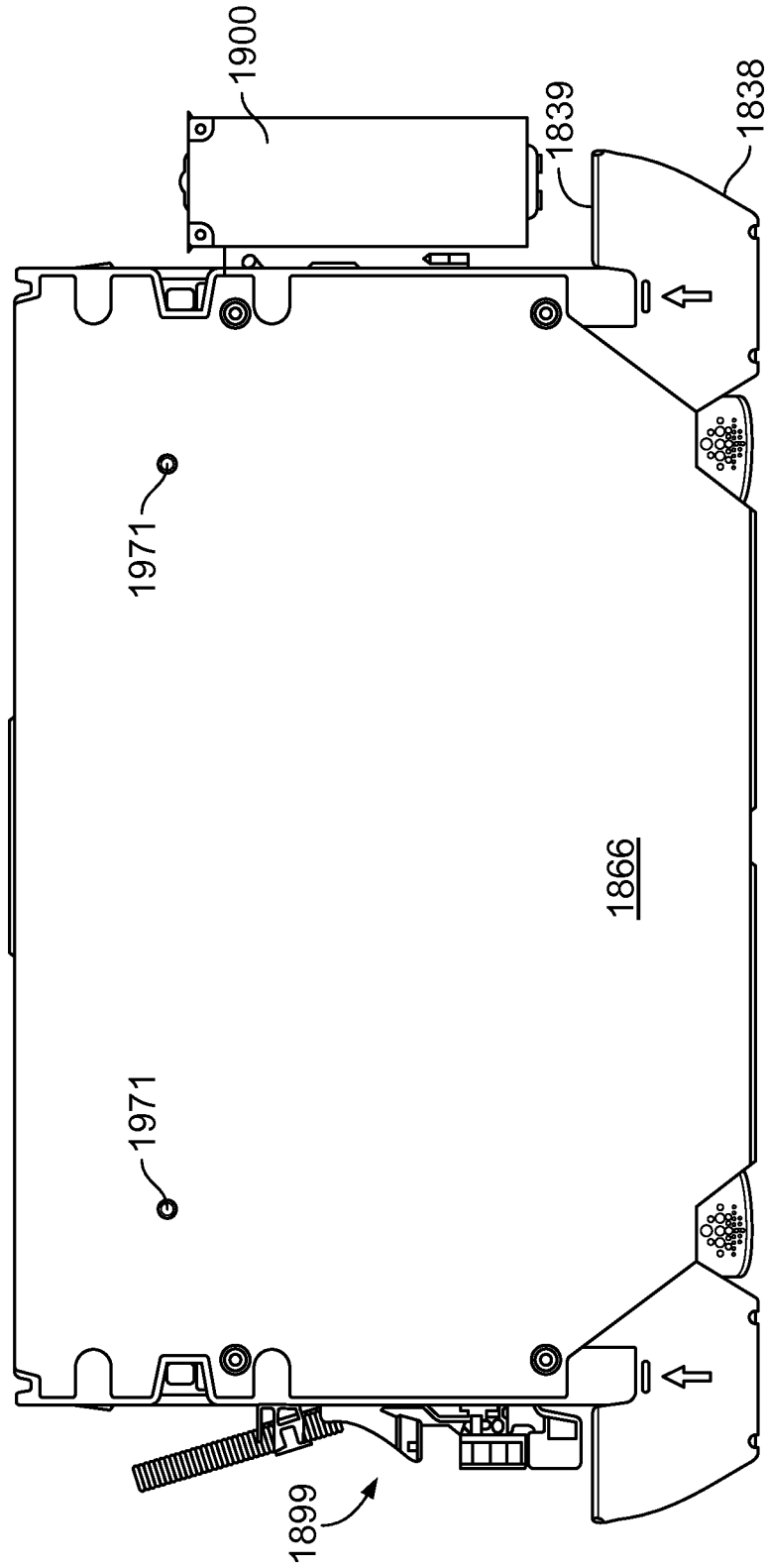

FIG. 82

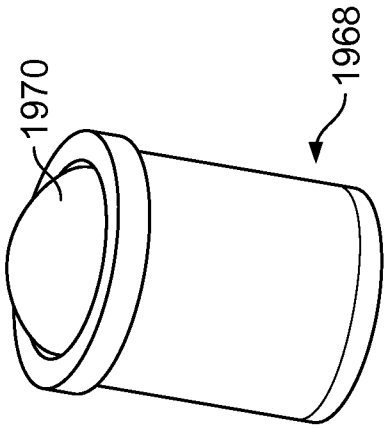

FIG. 83A

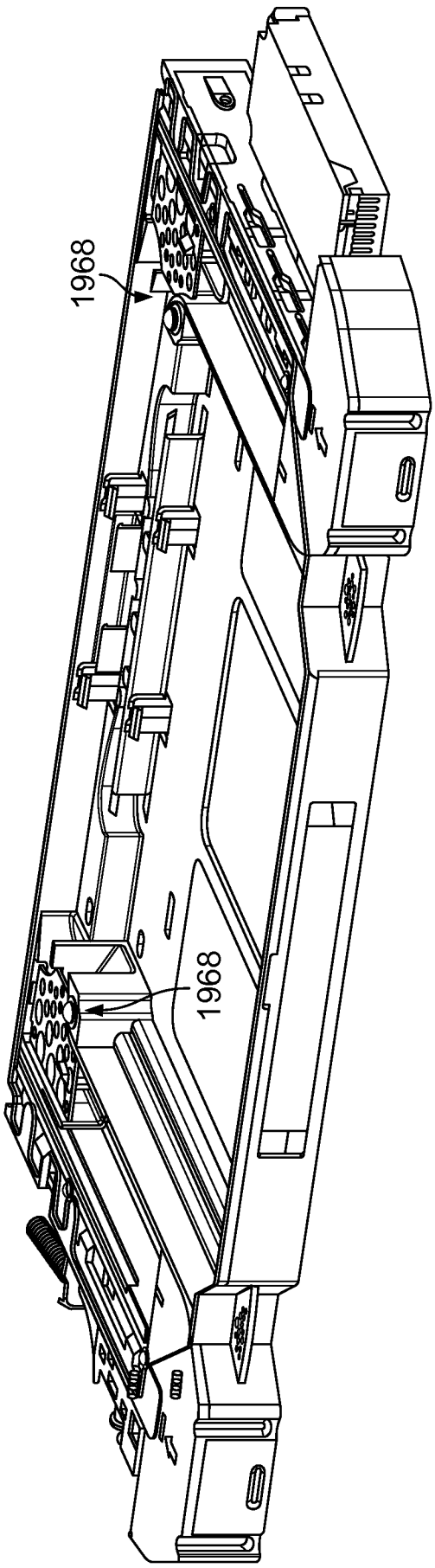

FIG. 83

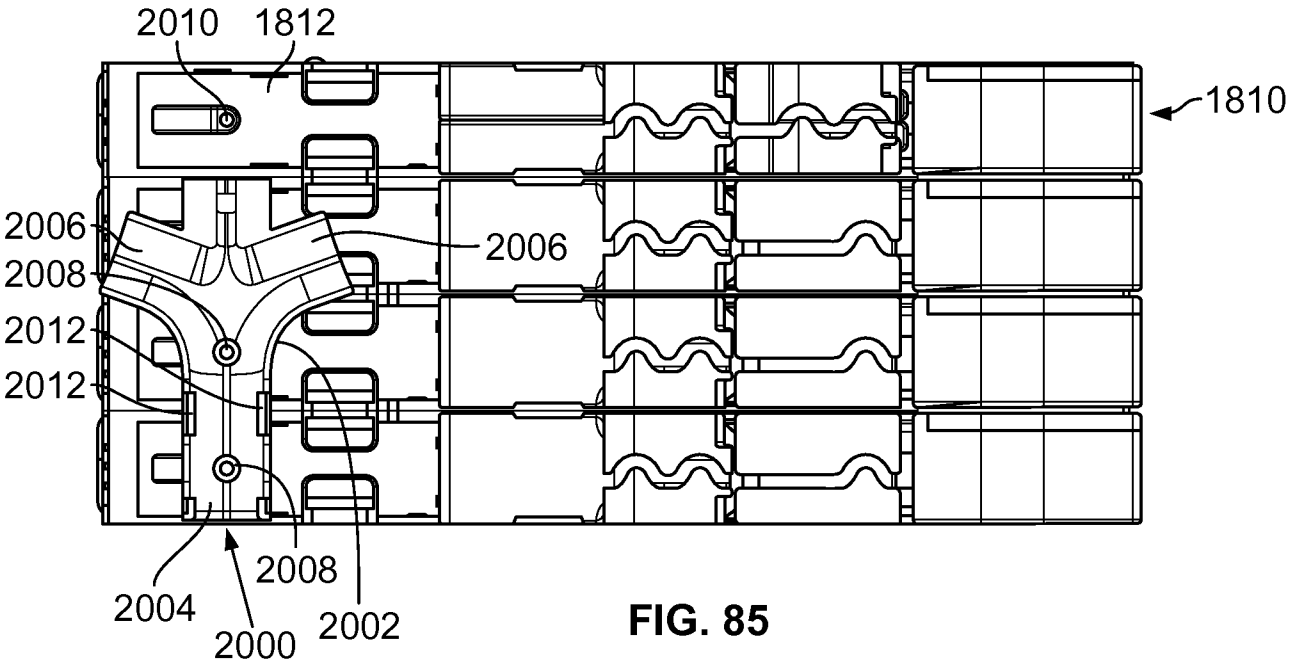
2010
1812
1810
2006
2008
2012
2012
2006
2004
2000
2008
2002

FIG. 85

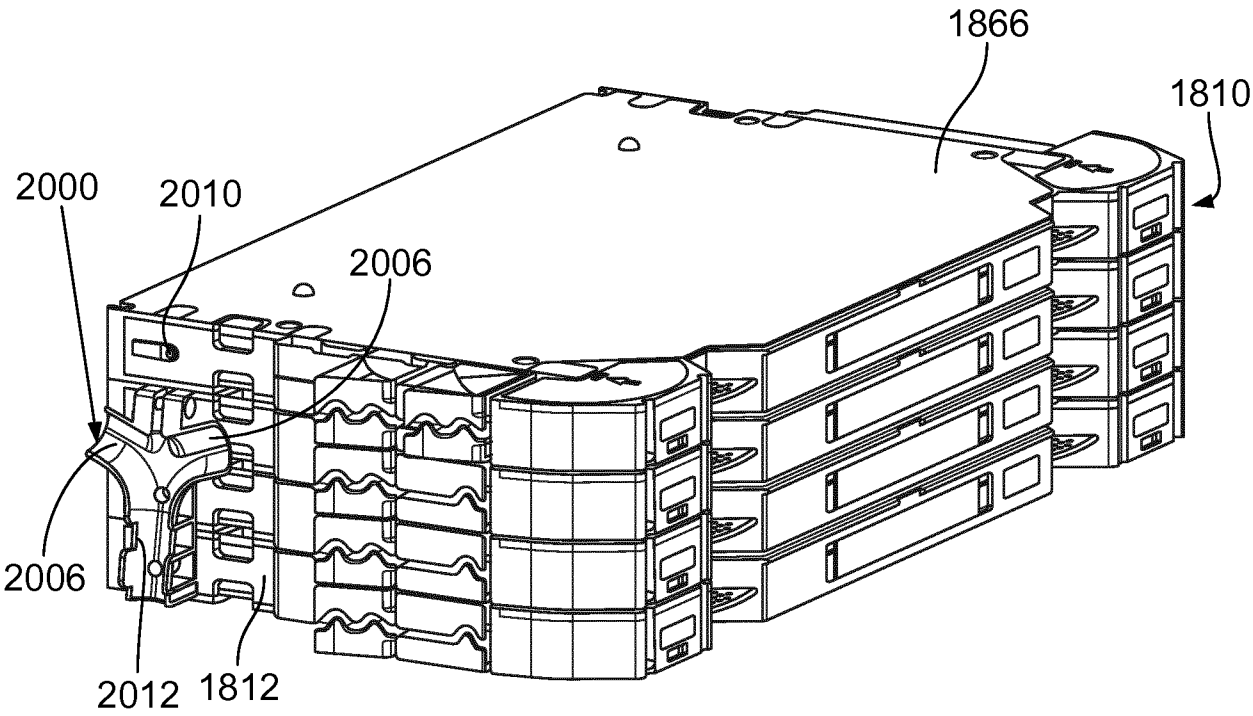
1866
1810
2000
2010
2006
2006
2012
1812

FIG. 84

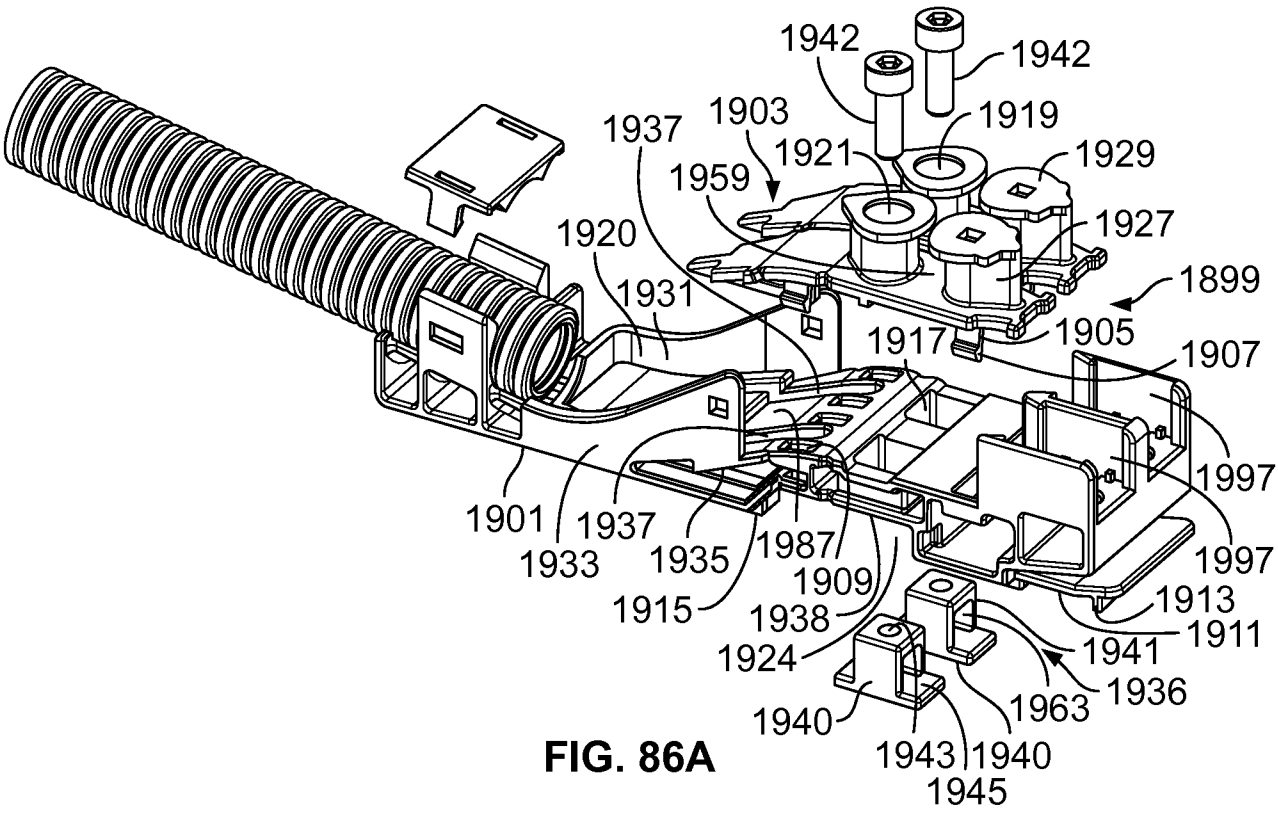

FIG. 86A

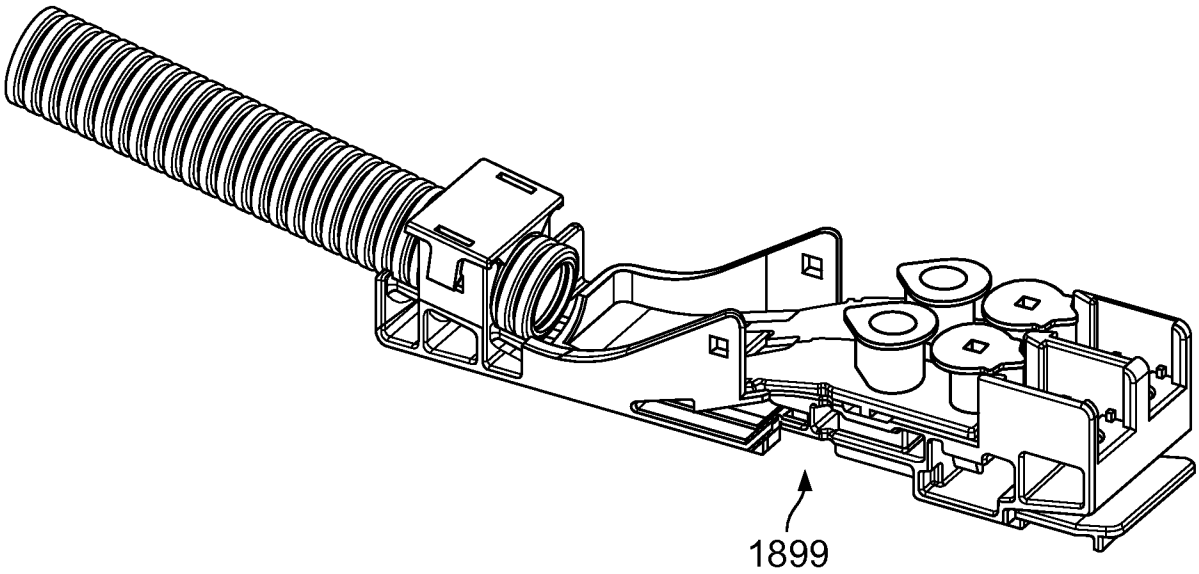

FIG. 86B

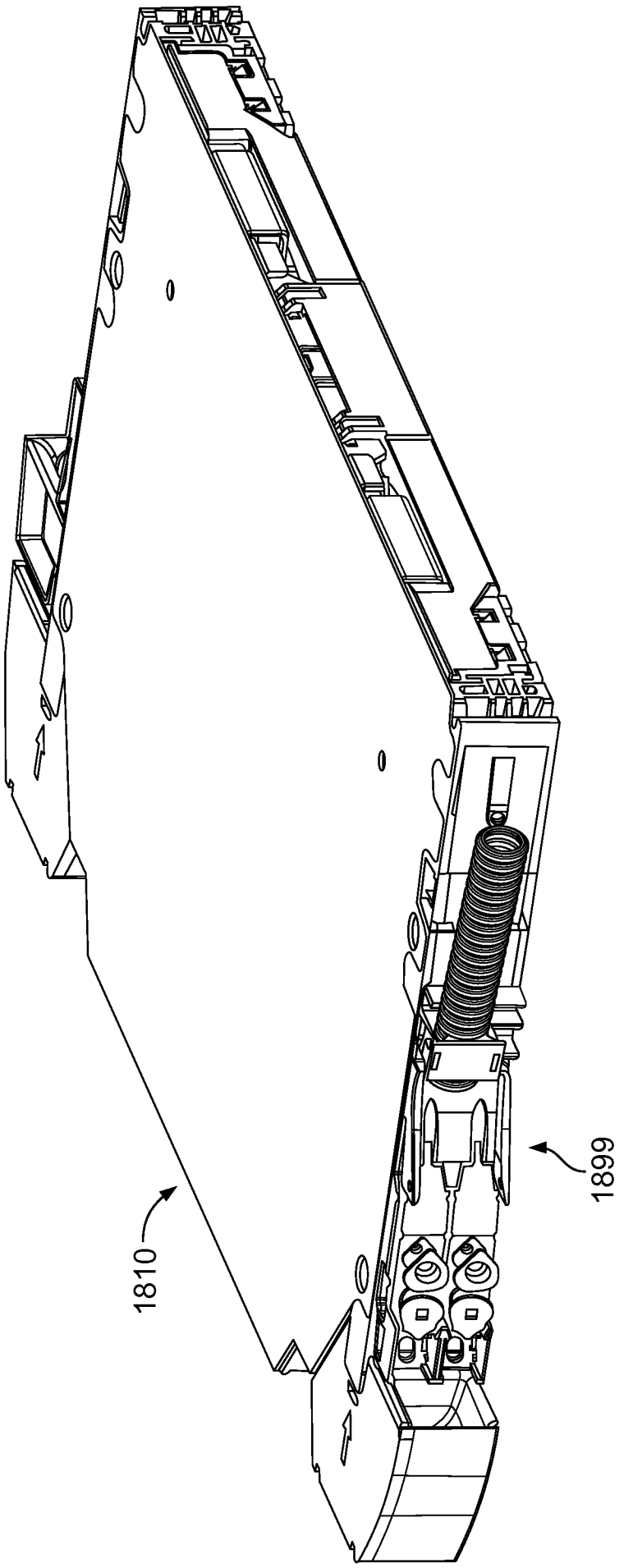

FIG. 86C

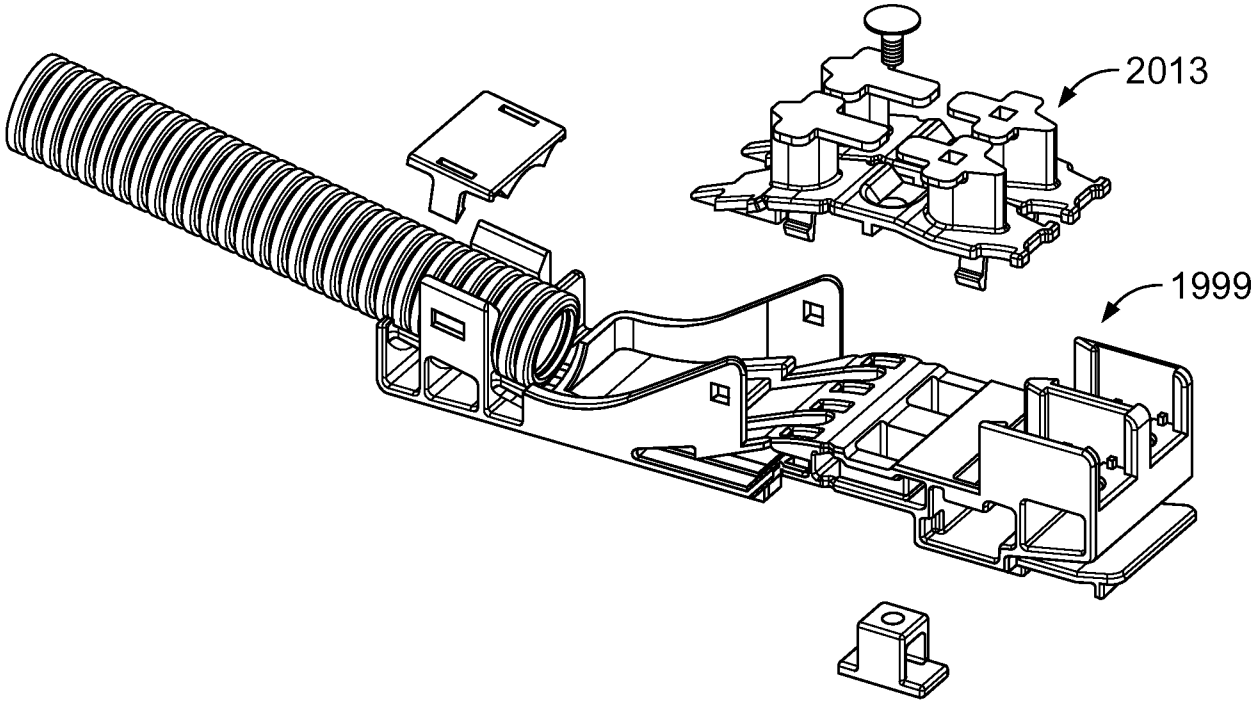

FIG. 87A

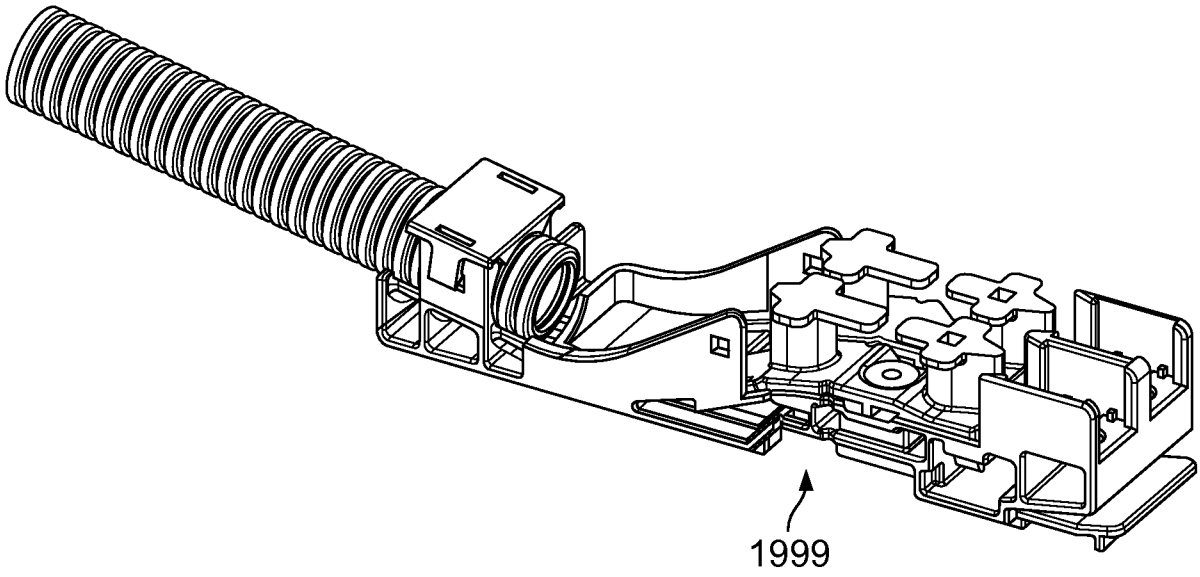

FIG. 87B

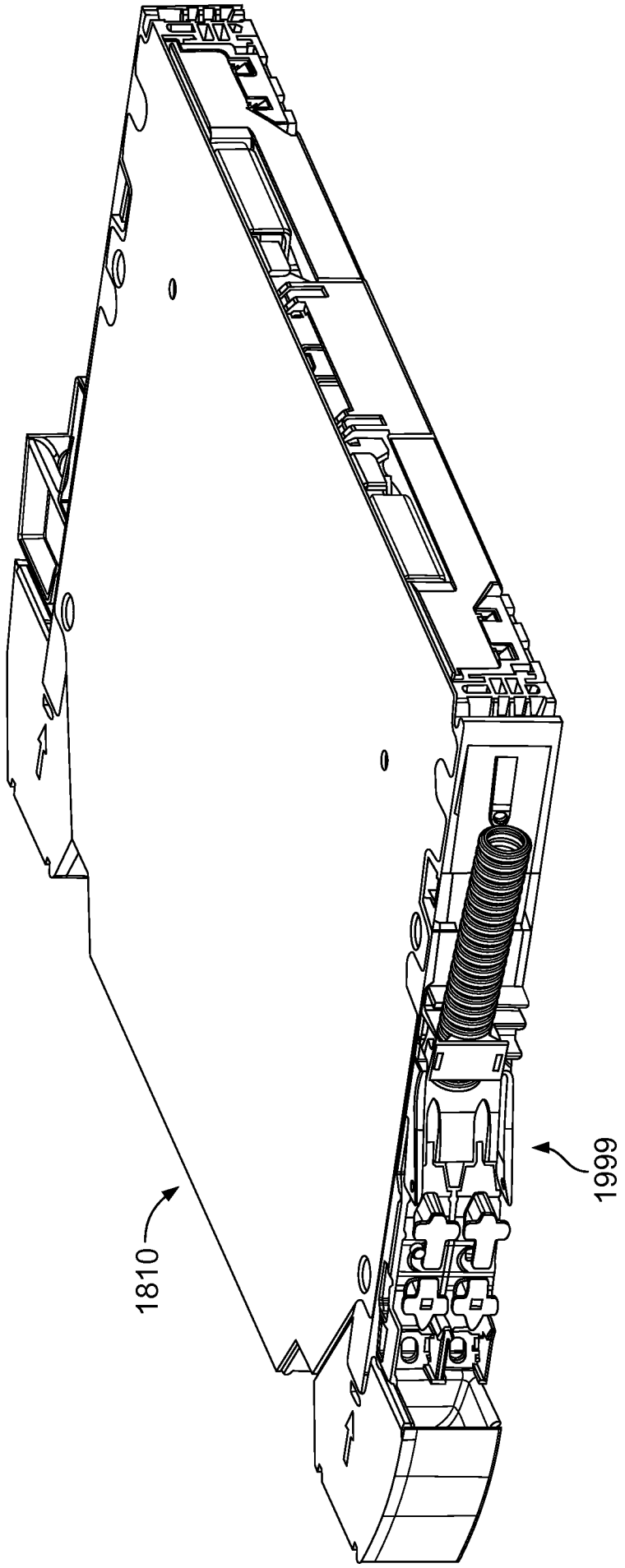

FIG. 87C

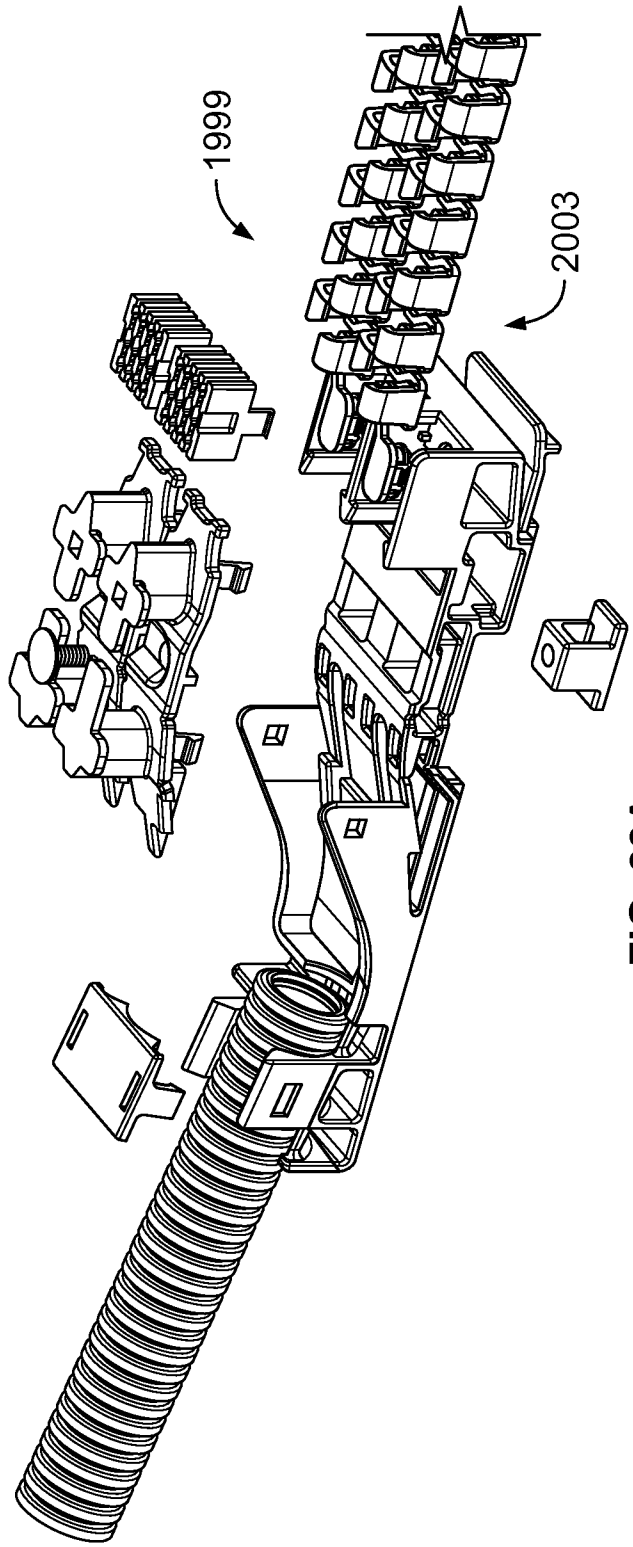

FIG. 88A

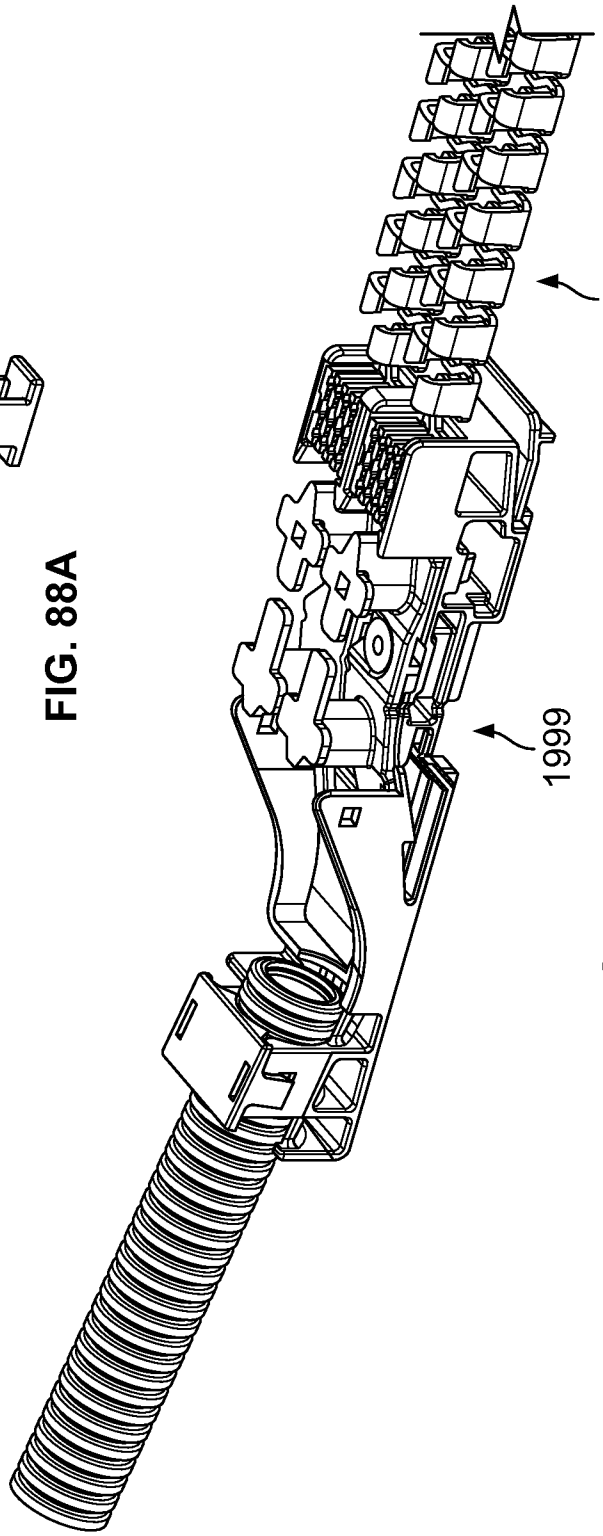

FIG. 88B

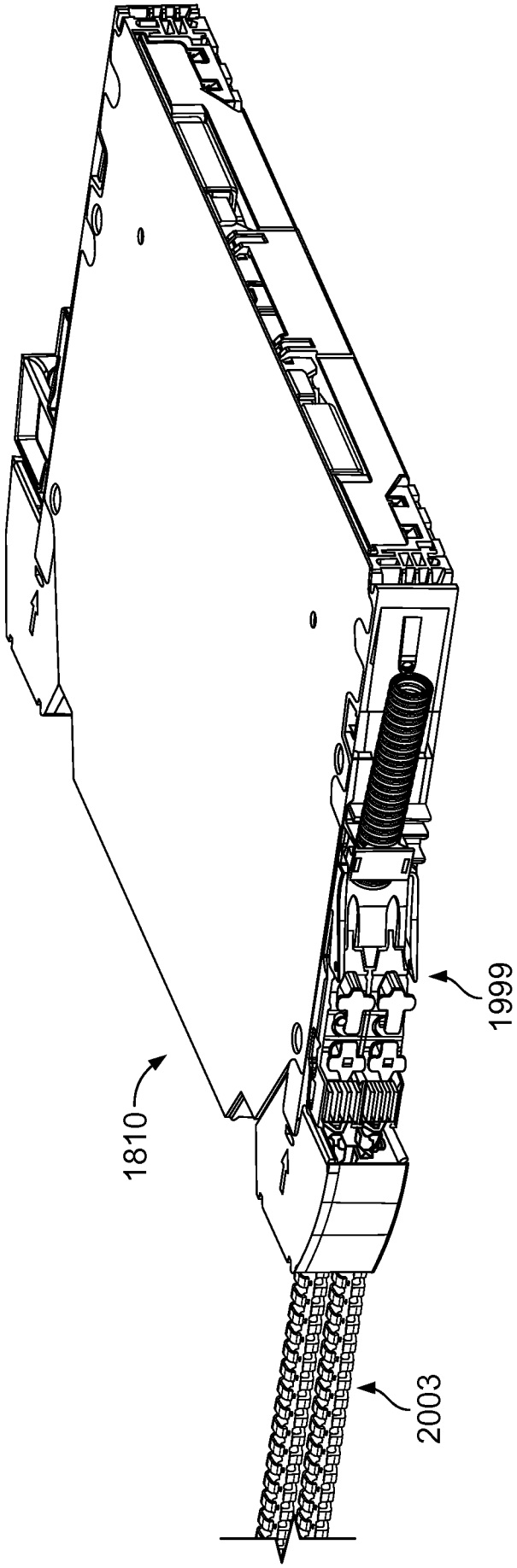

FIG. 88C

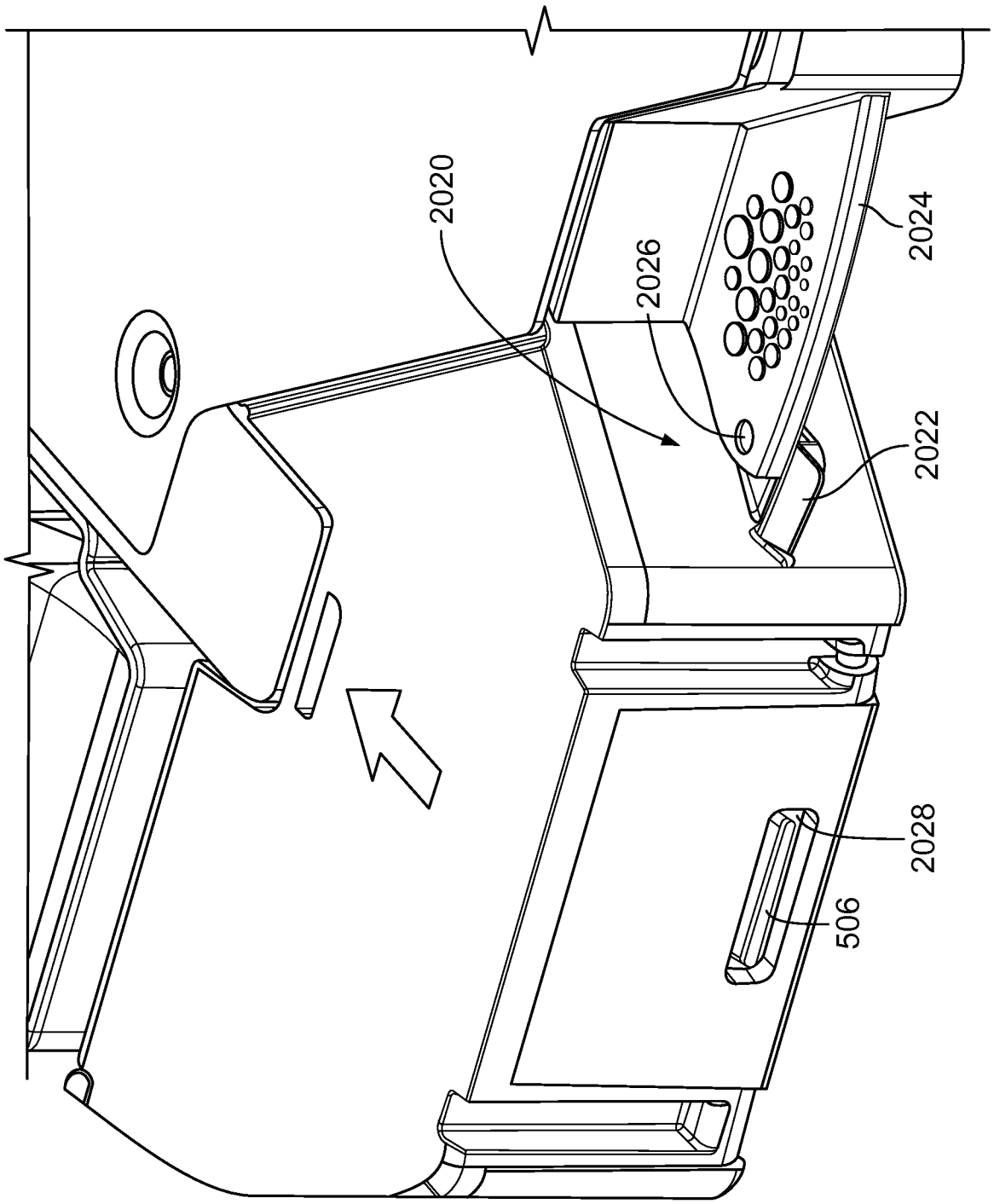

FIG. 89

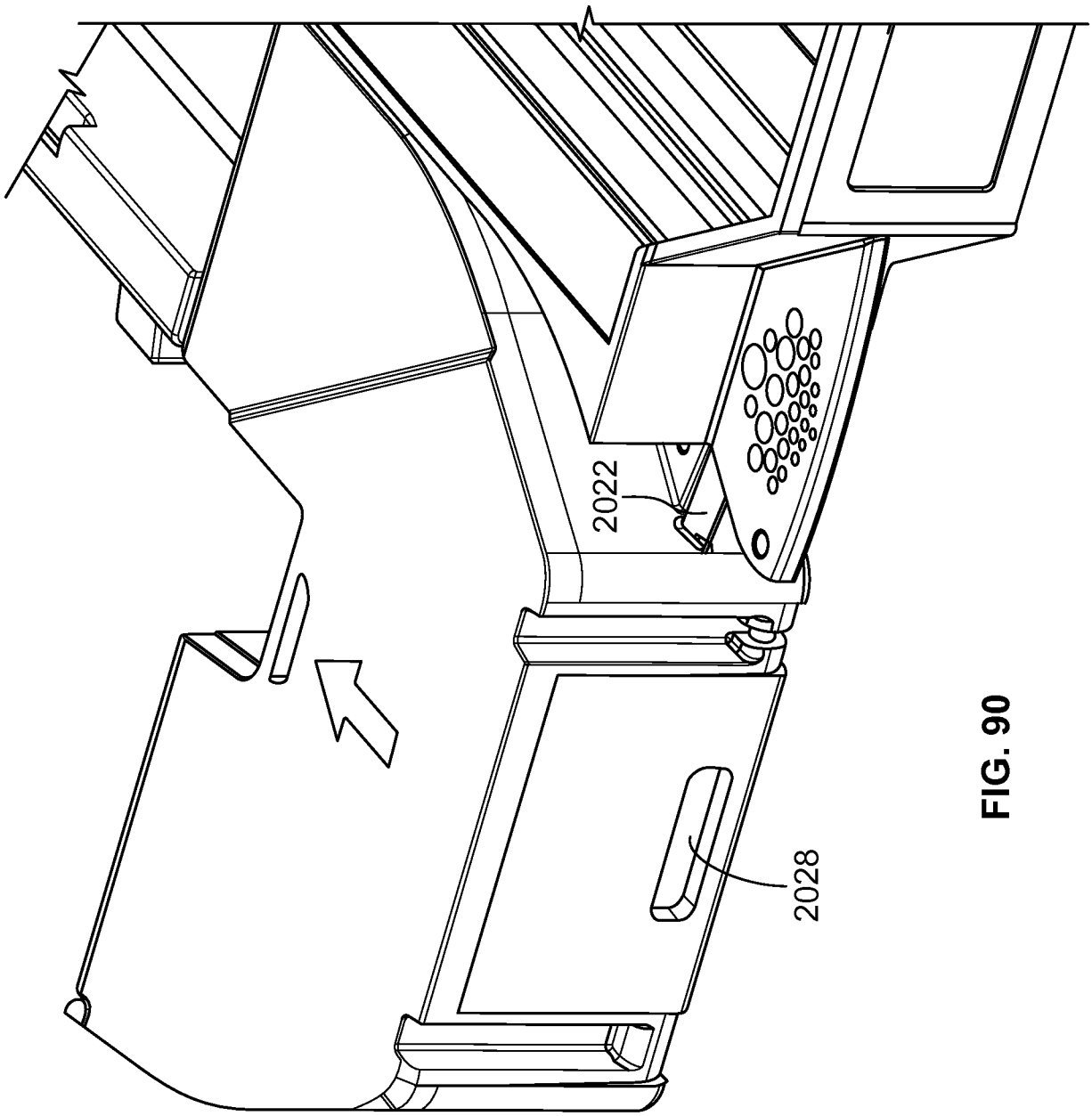

FIG. 90

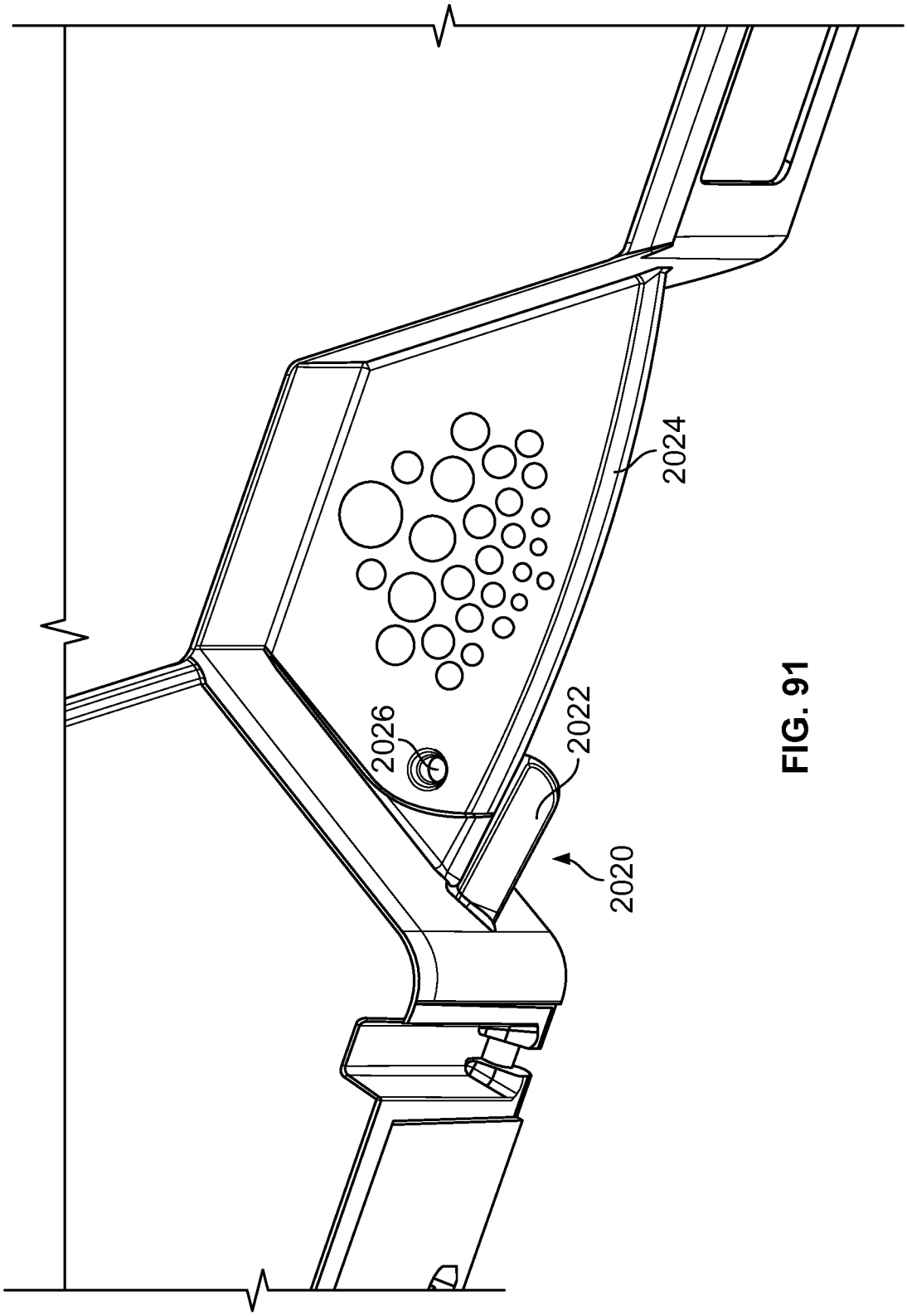

FIG. 91

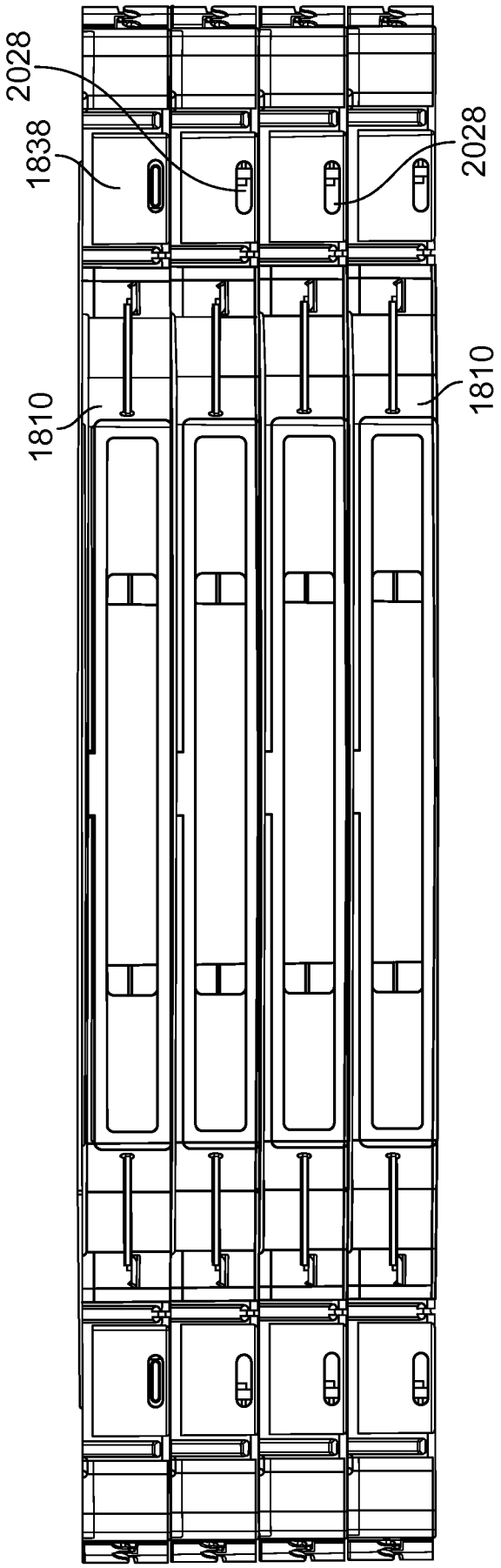

FIG. 92

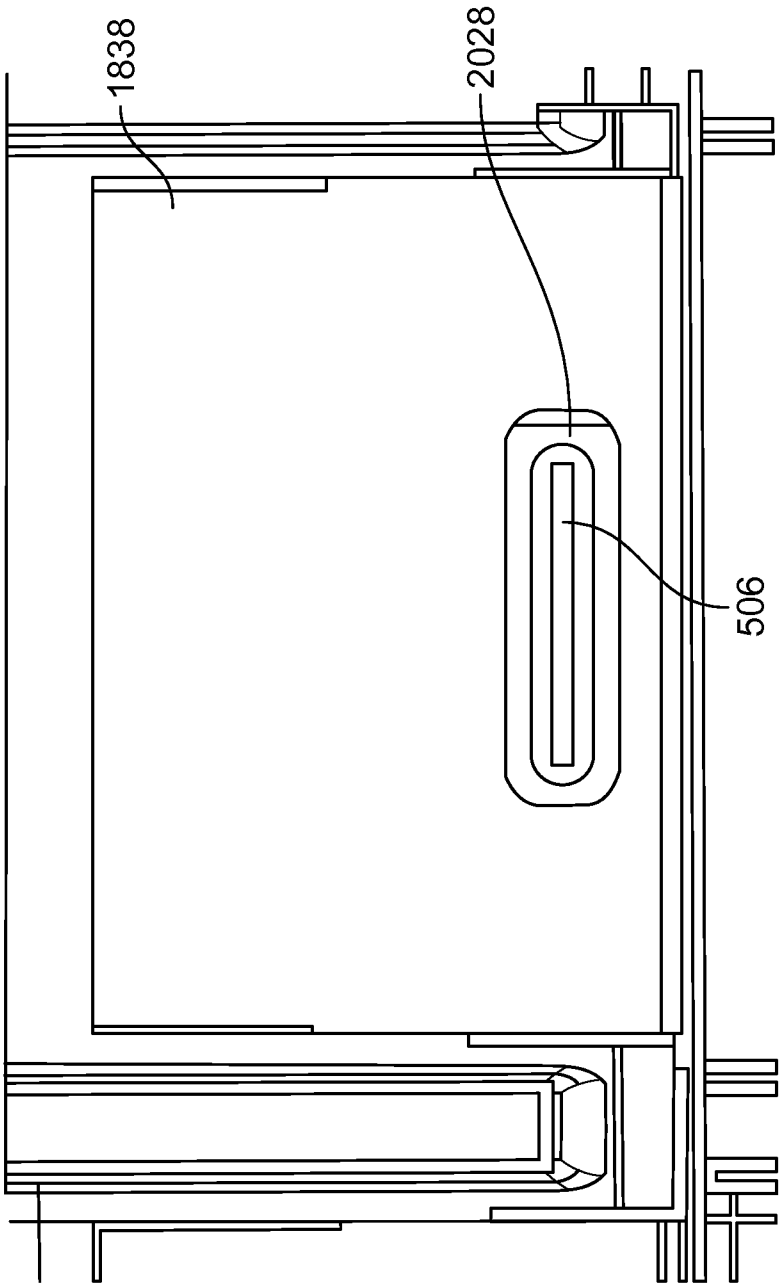

FIG. 93

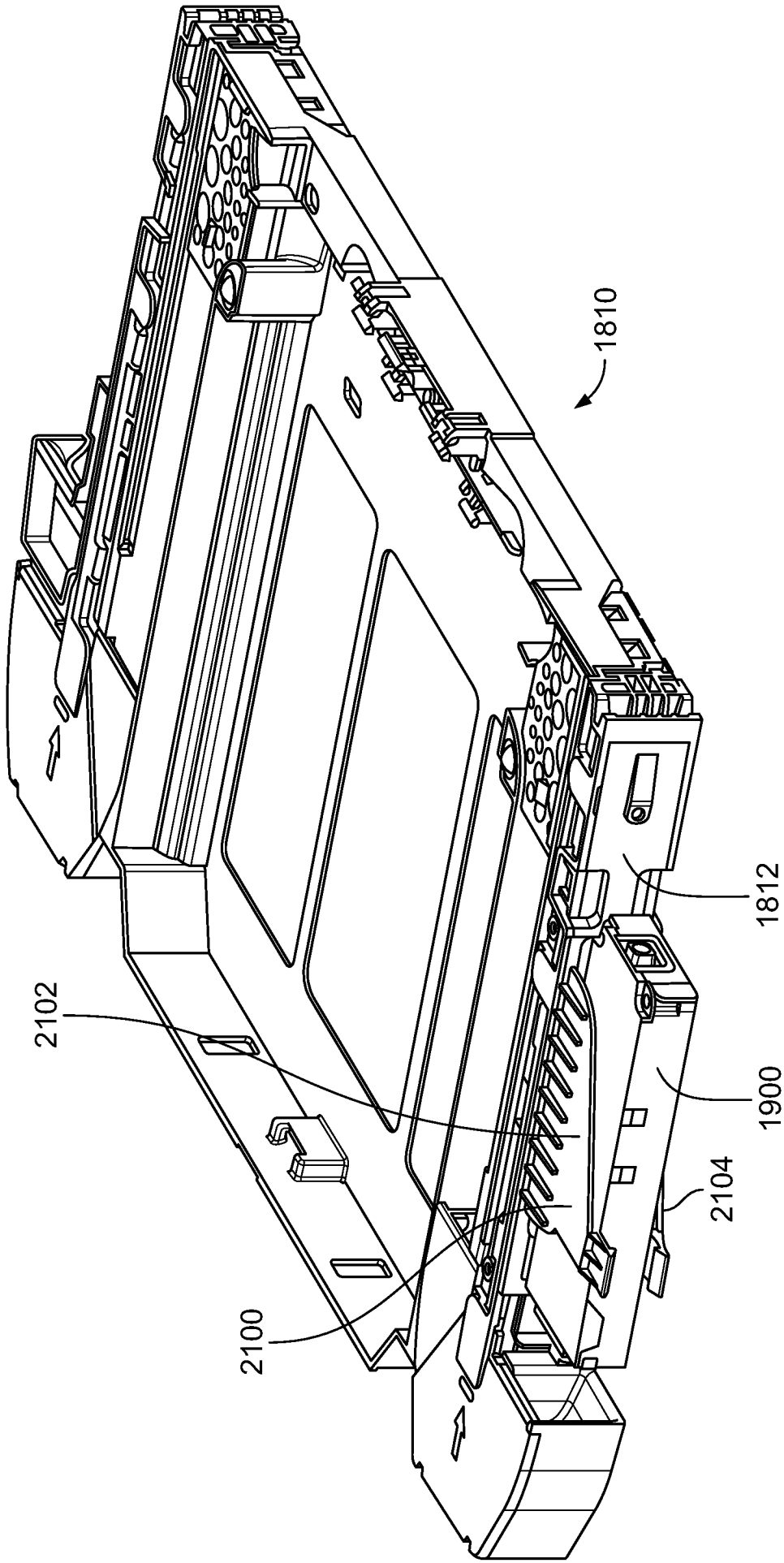

FIG. 94

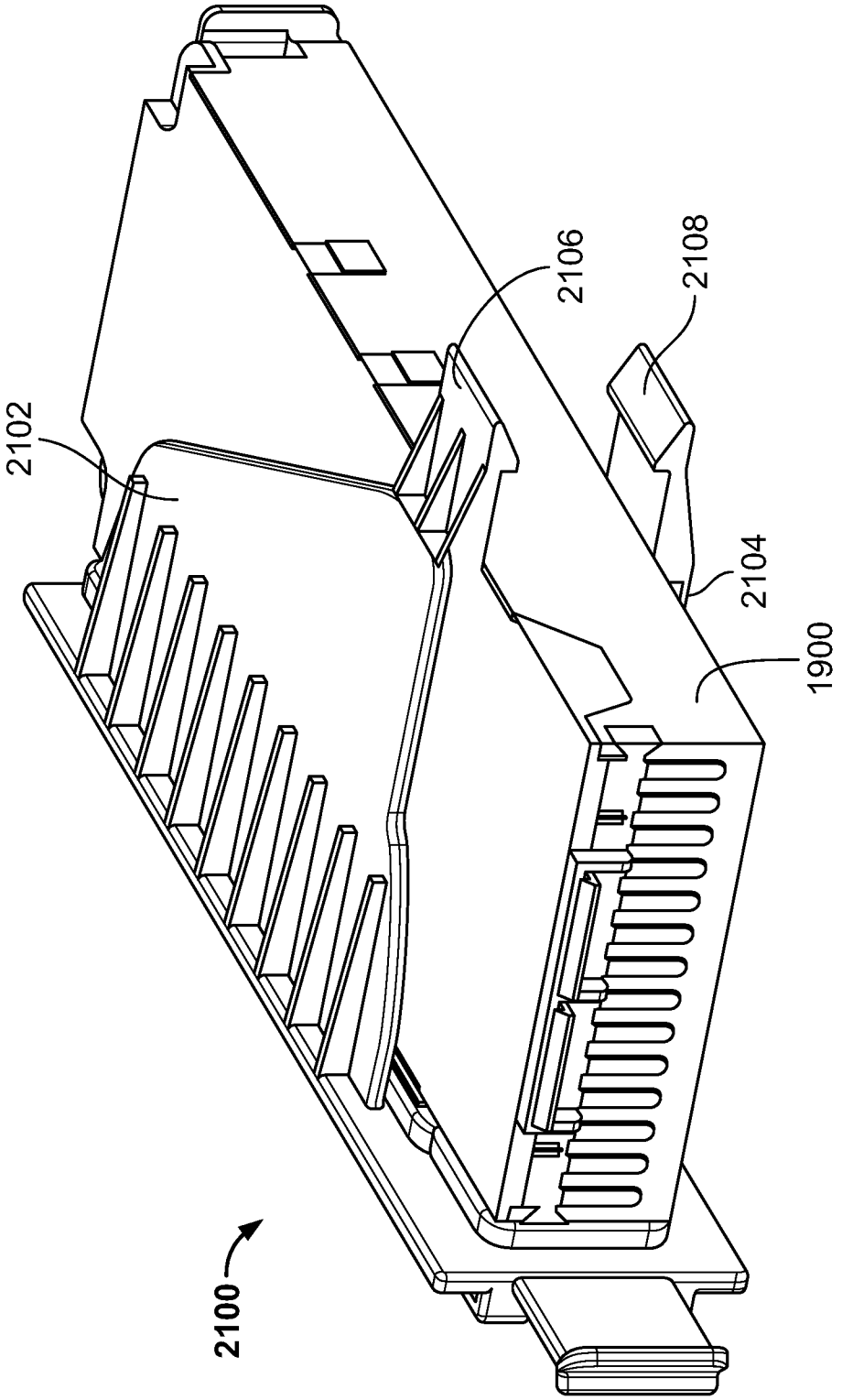

FIG. 94A

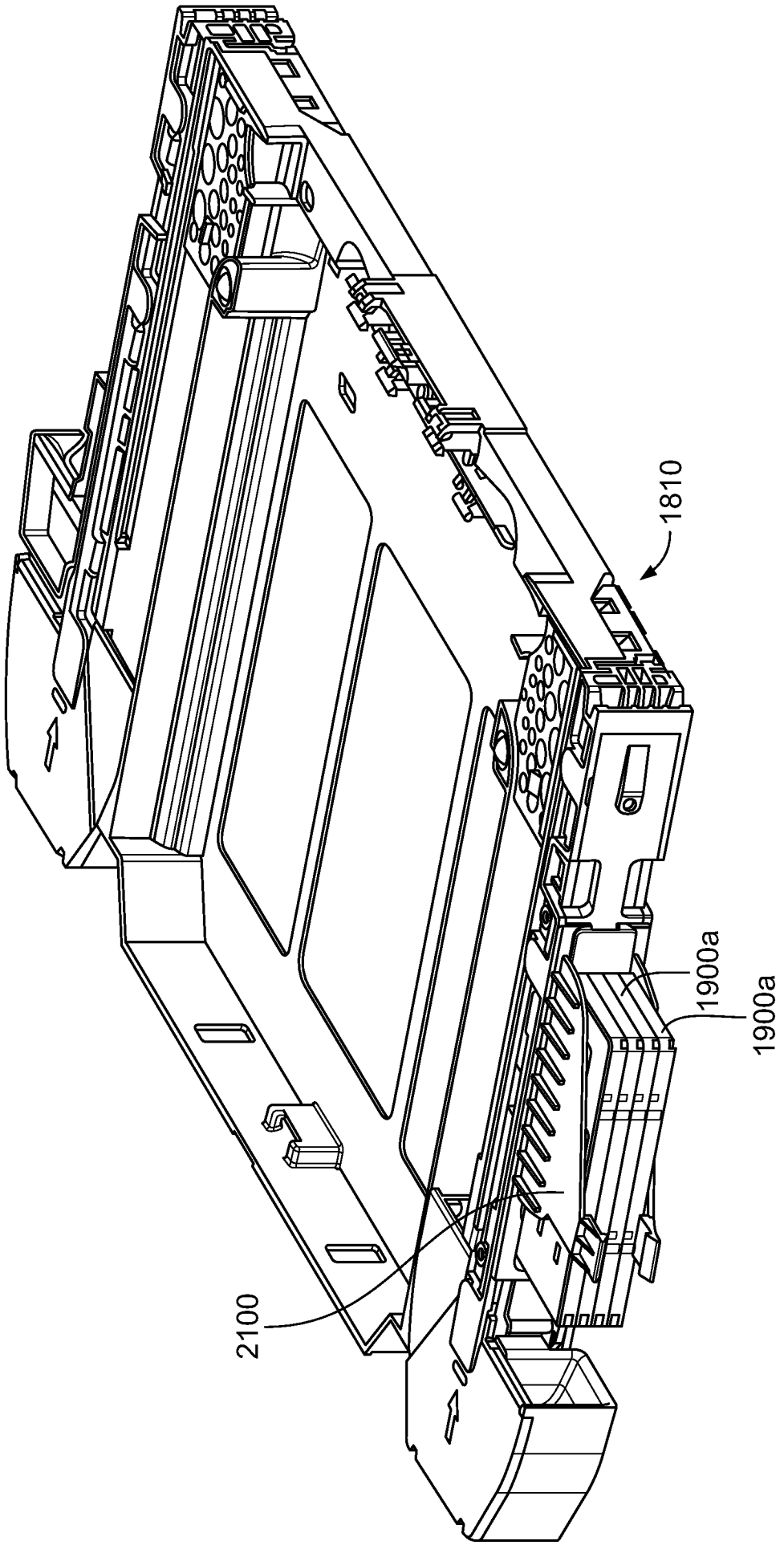

FIG. 95

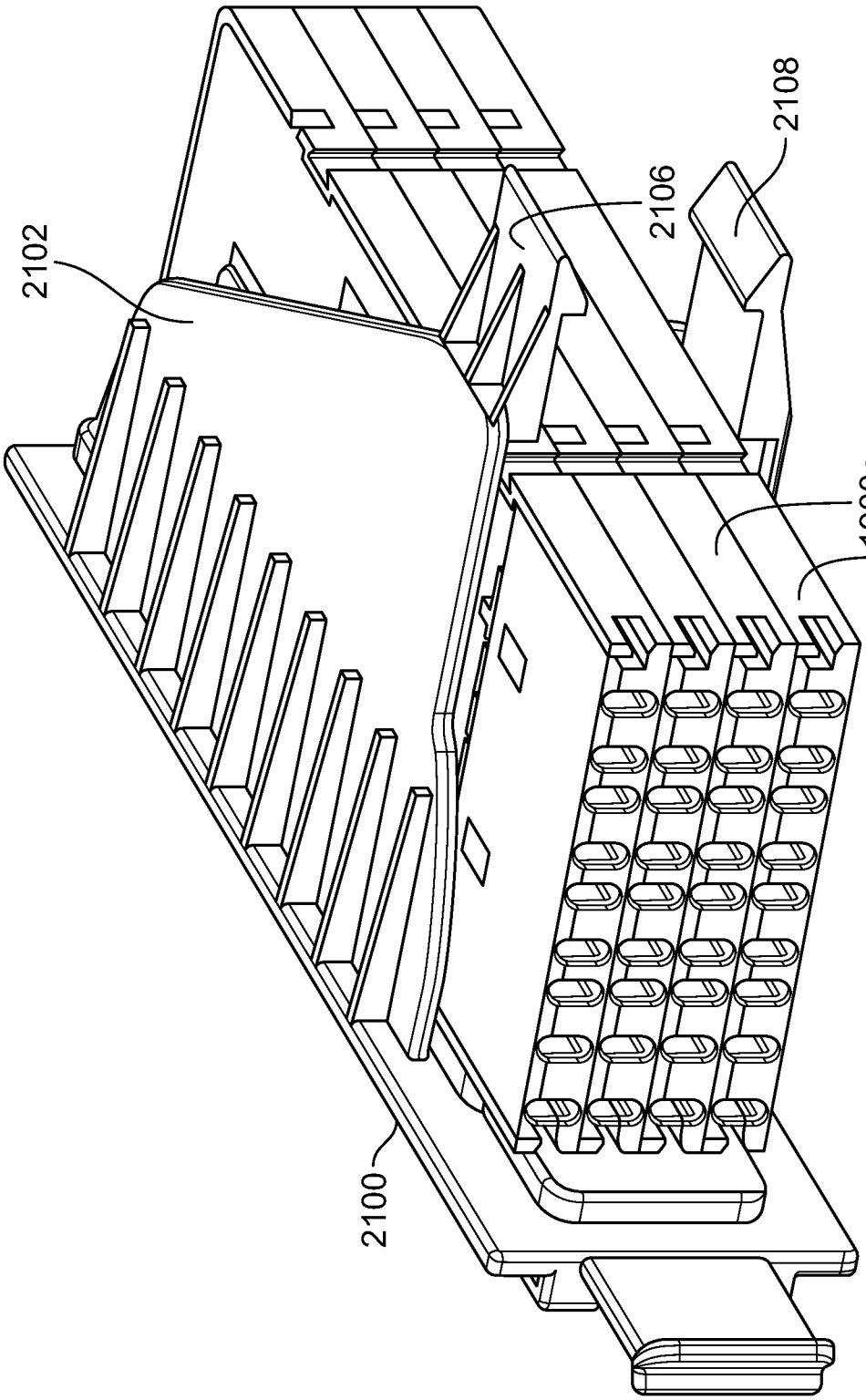

FIG. 95A

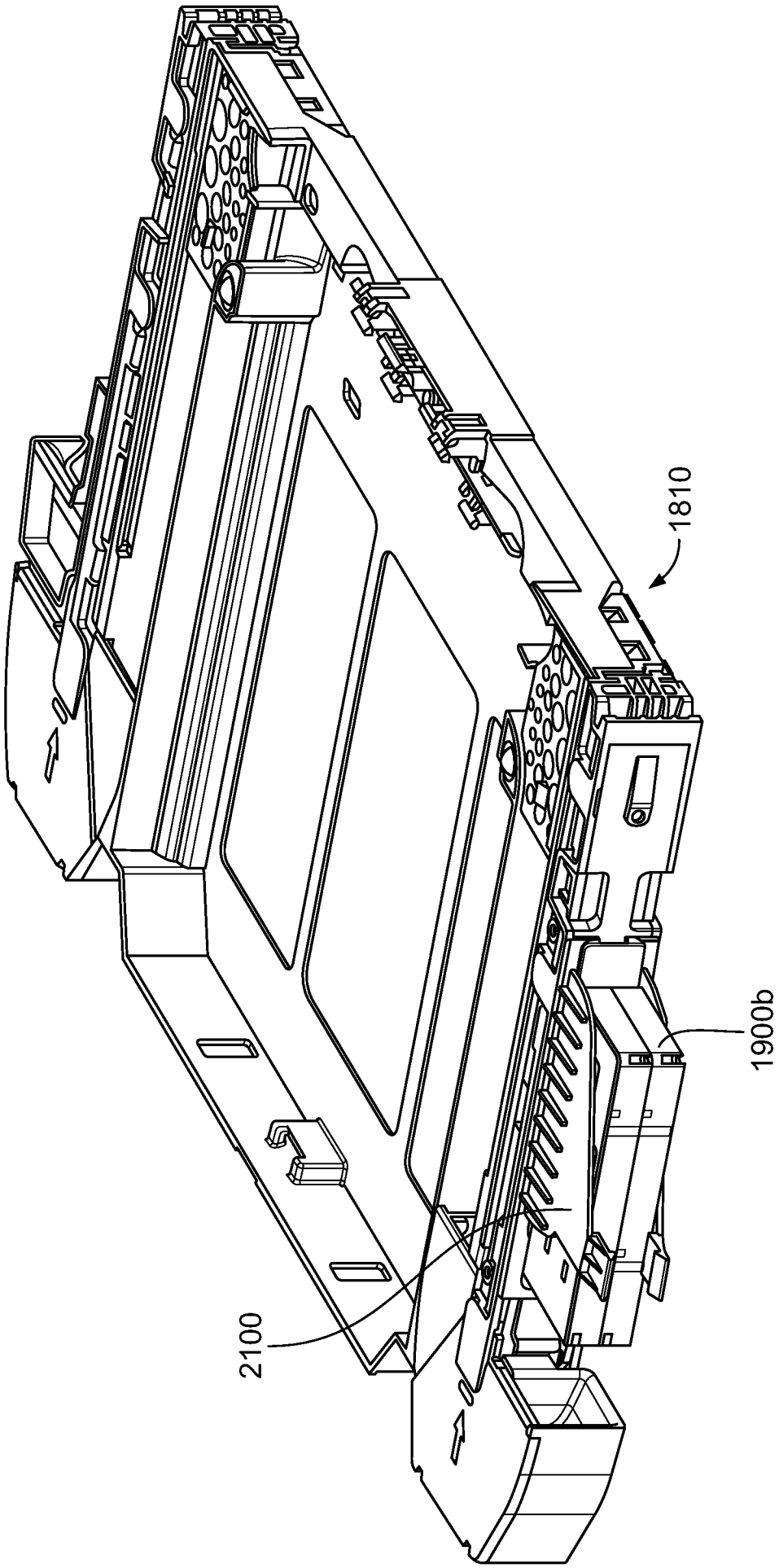

FIG. 96

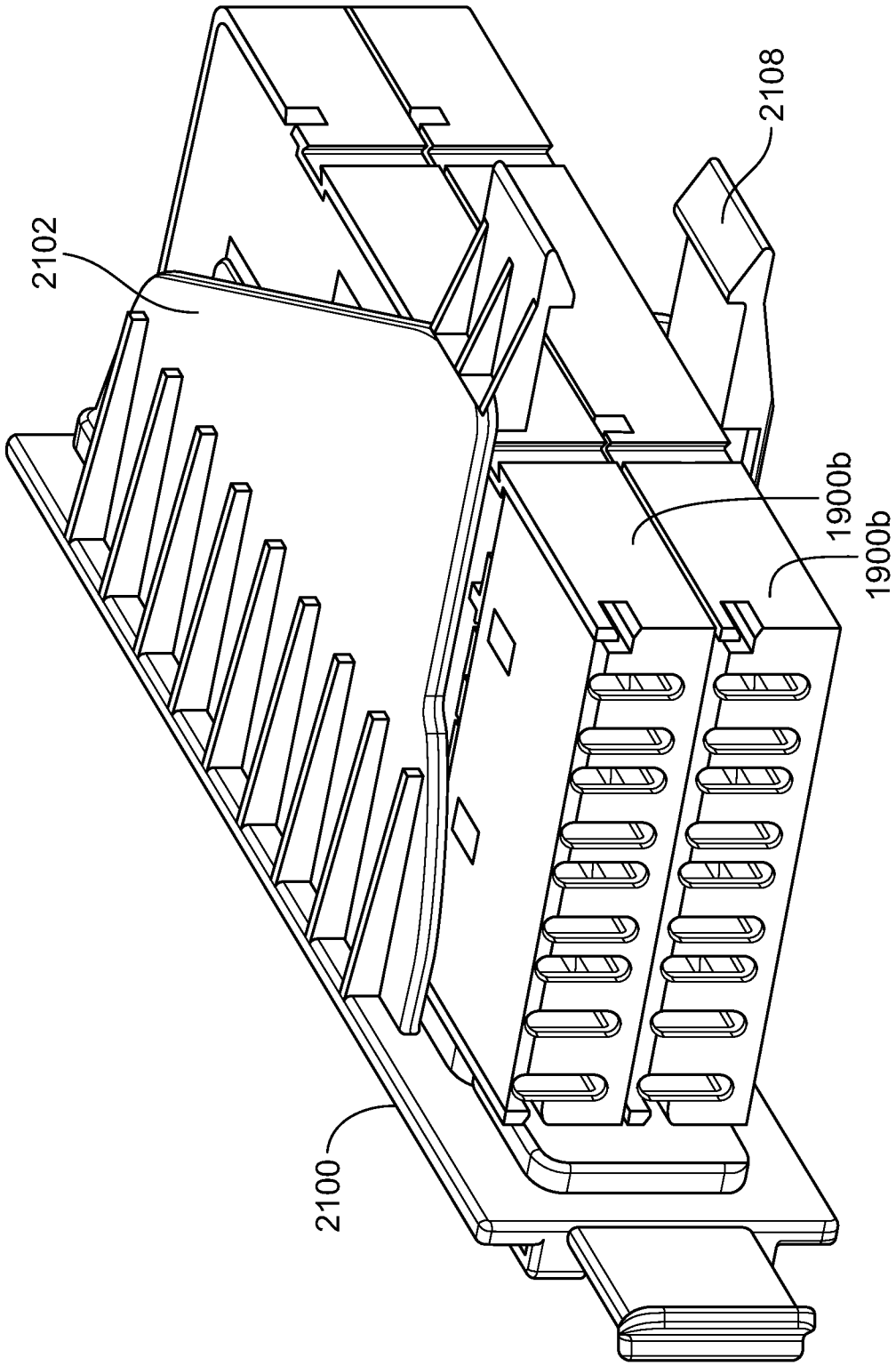

FIG. 96A

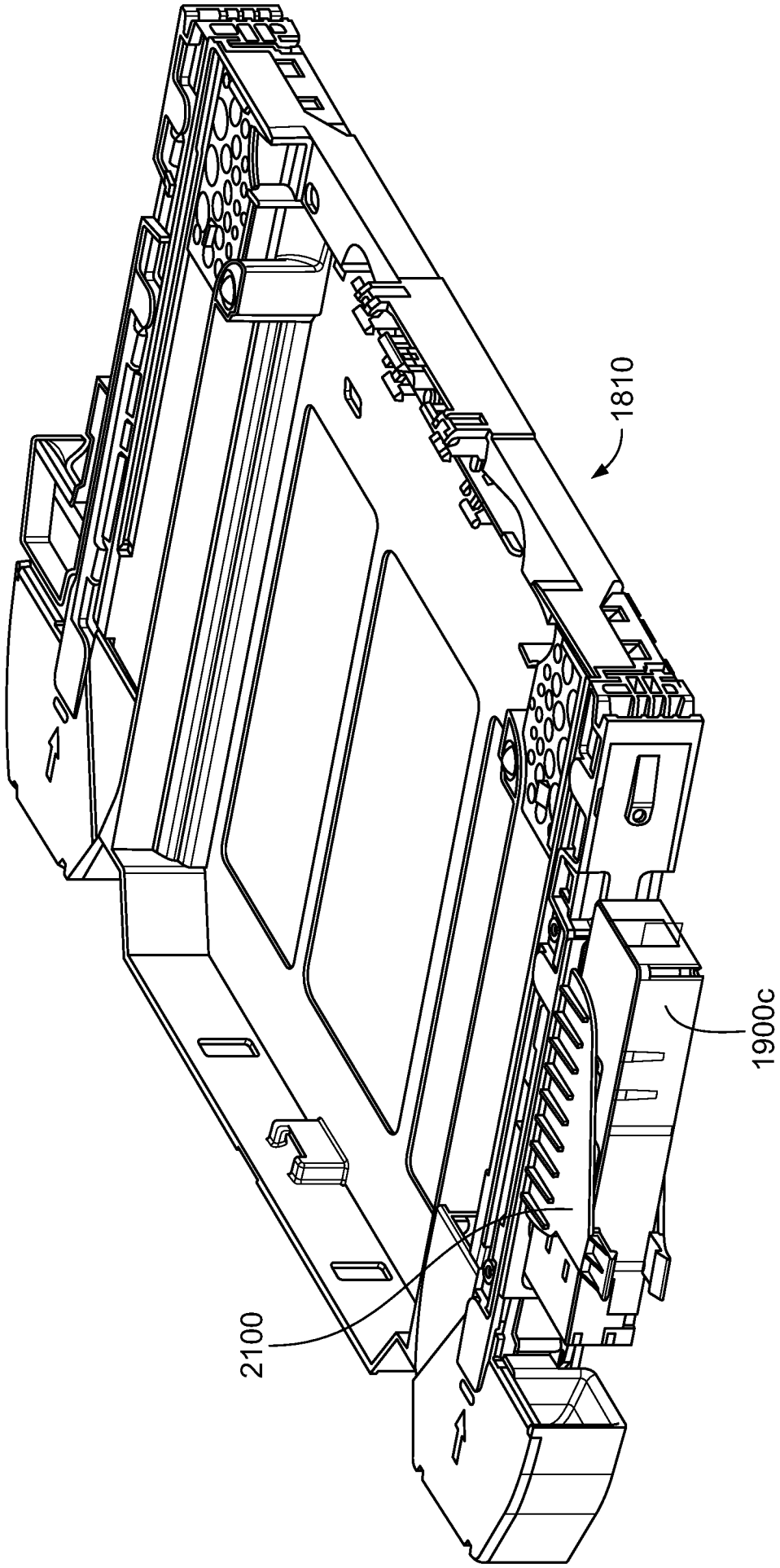

FIG. 97

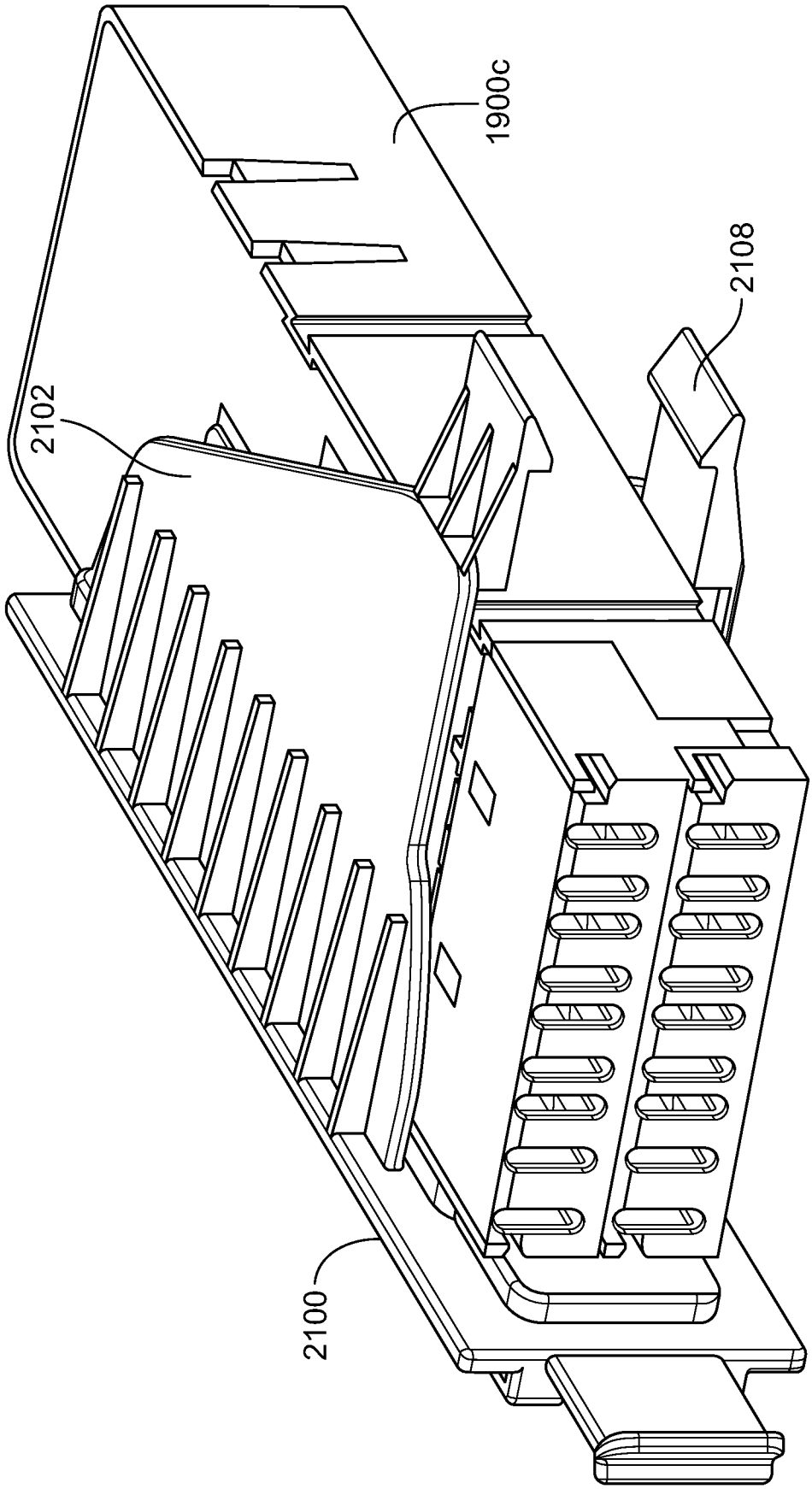

FIG. 97A

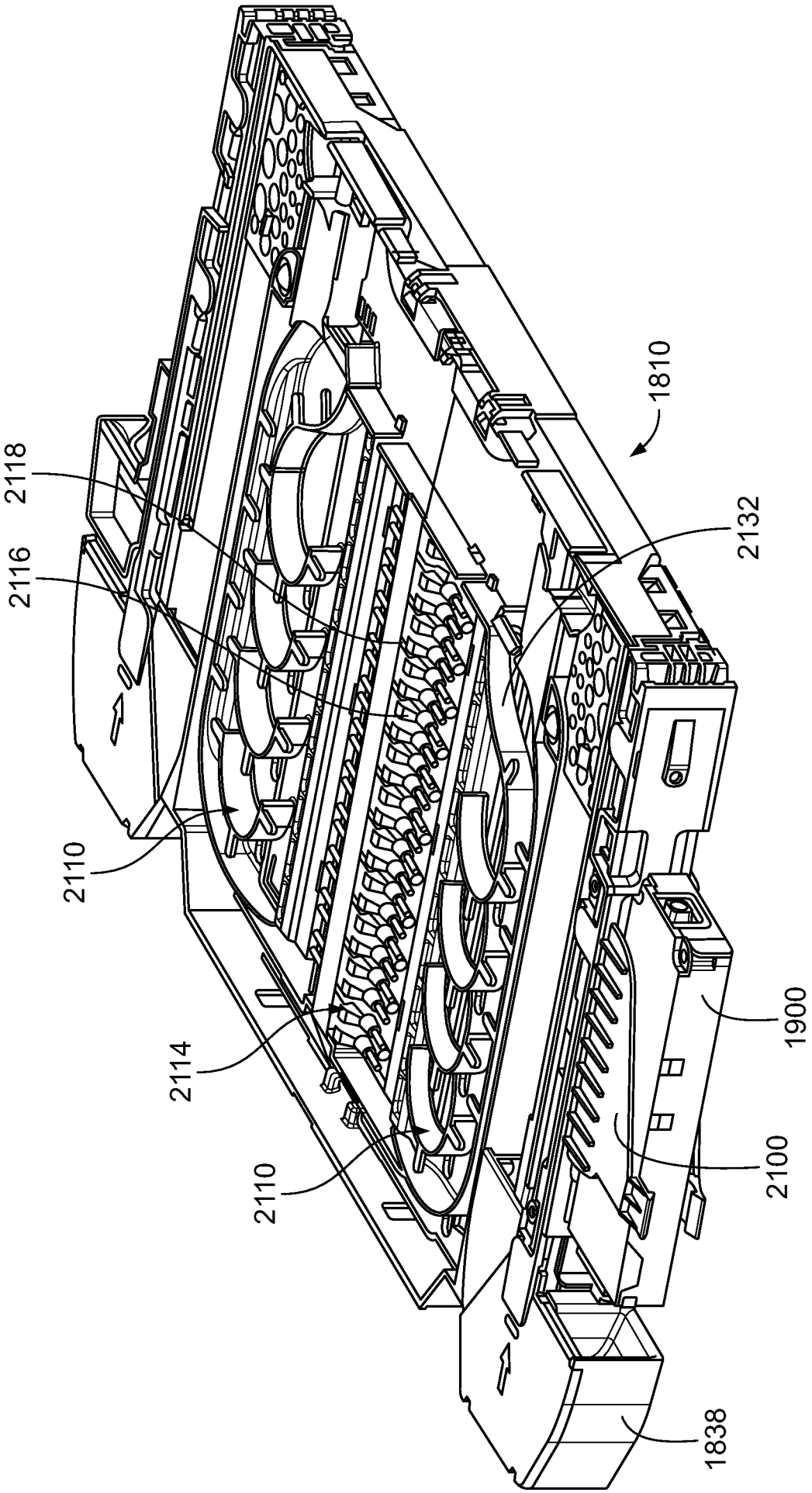

FIG. 98

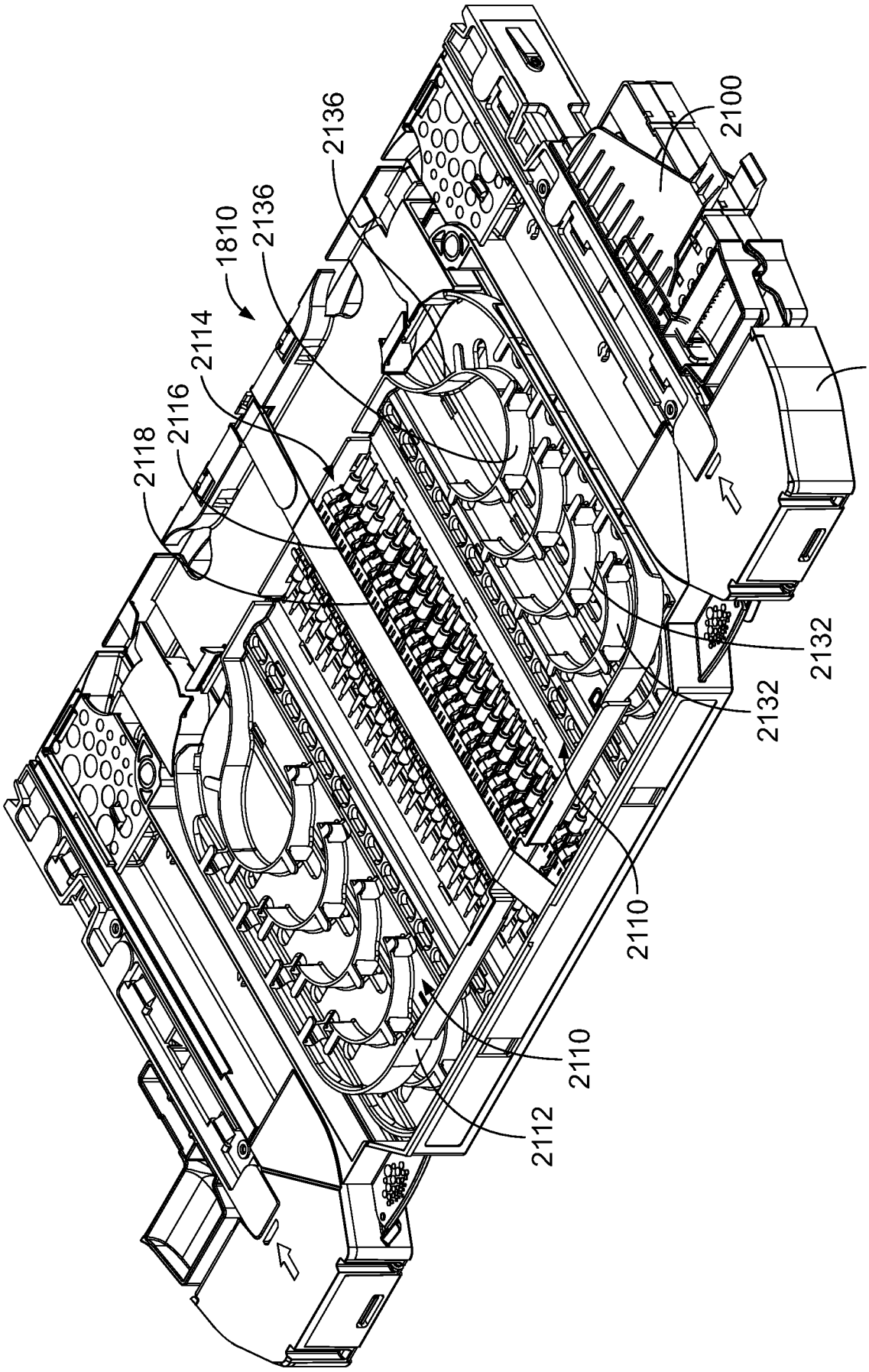
2136
2100
1810
2136
2114
2116
2118
1838
2132
2132
2110
2110
2112

FIG. 98A

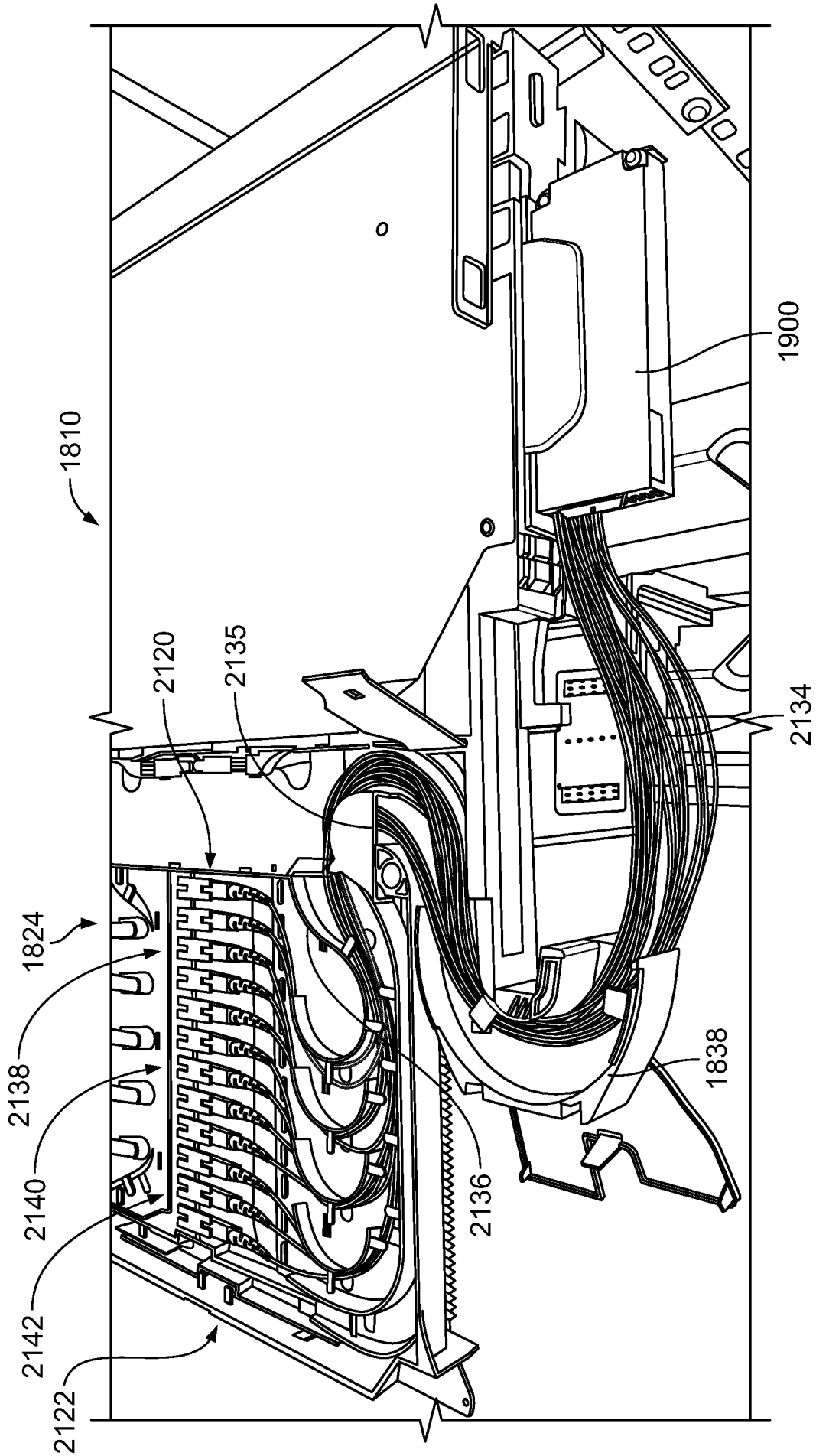

FIG. 99

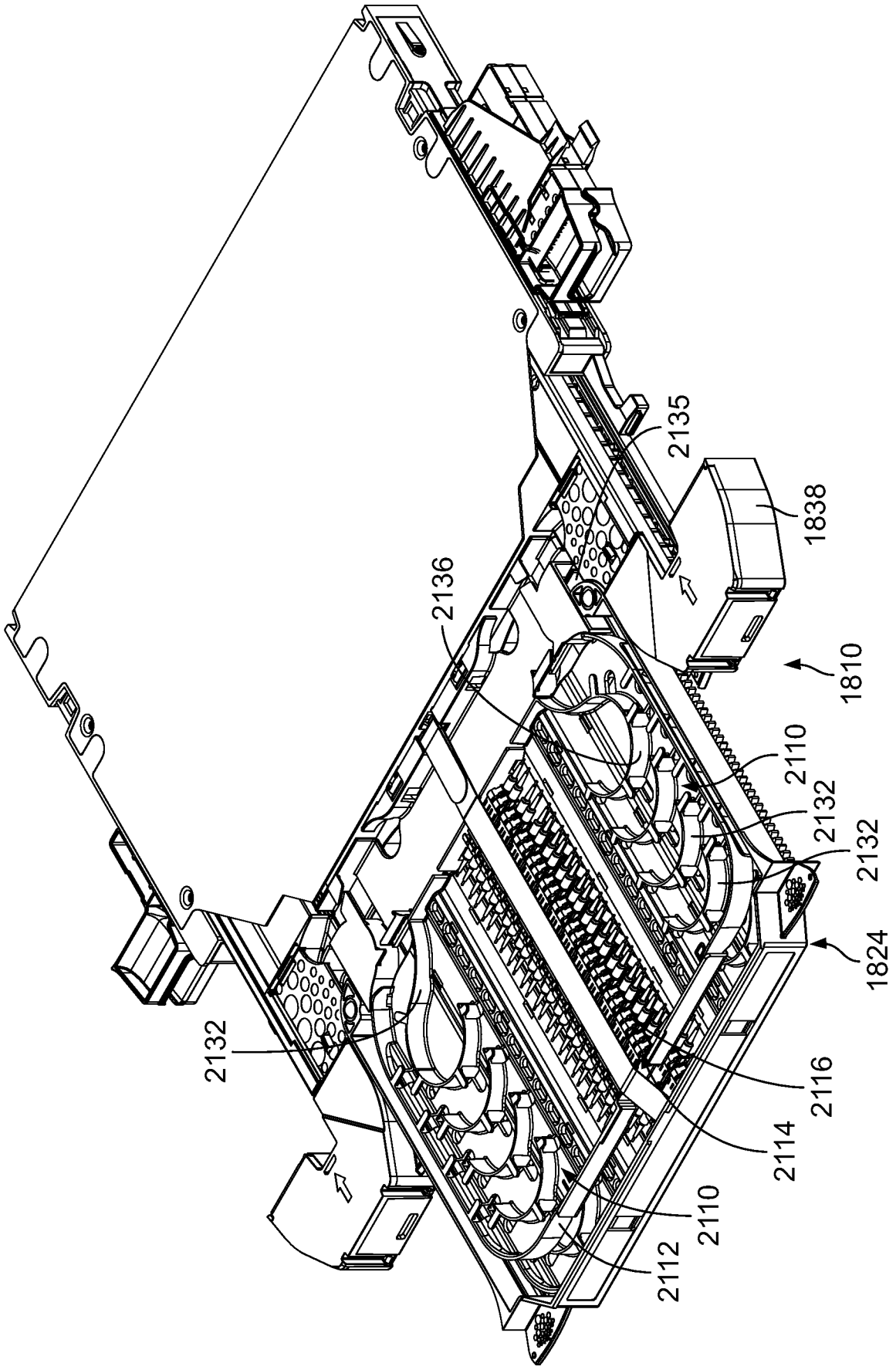
2135
1838
2136
1810
2110
2132
2132
1824
2132
2116
2114
2110
2112

FIG. 99A

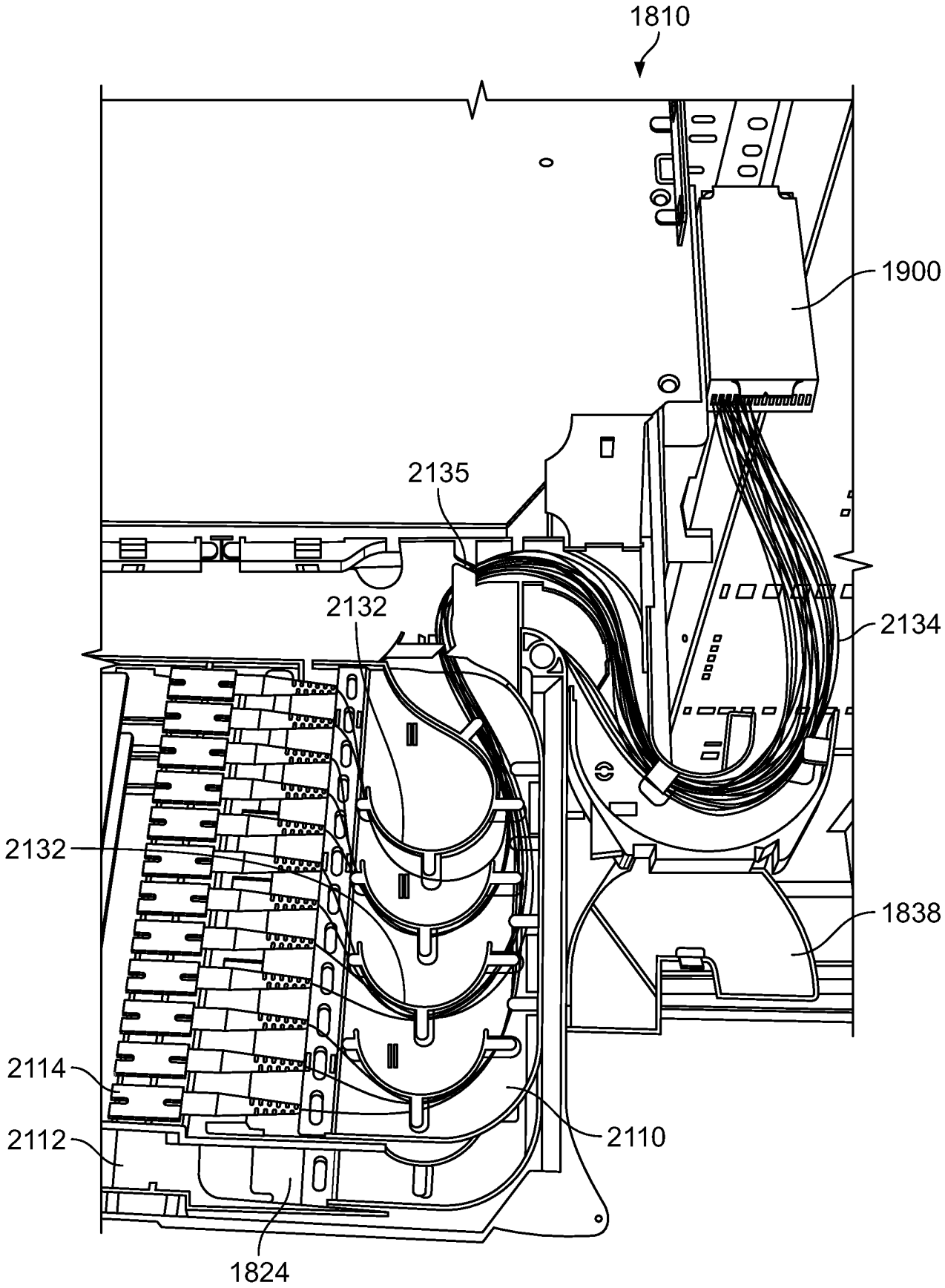

FIG. 100

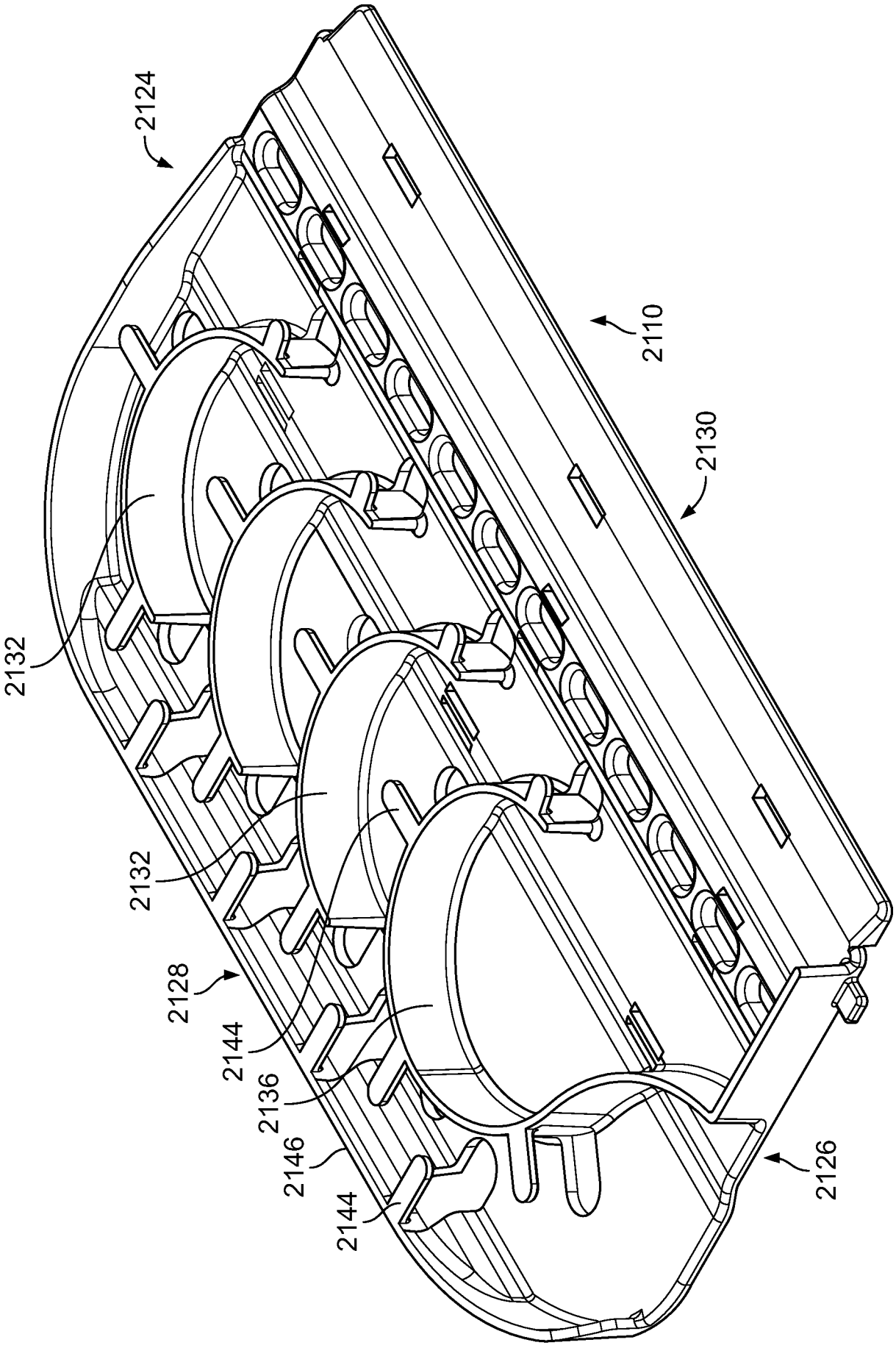

FIG. 101

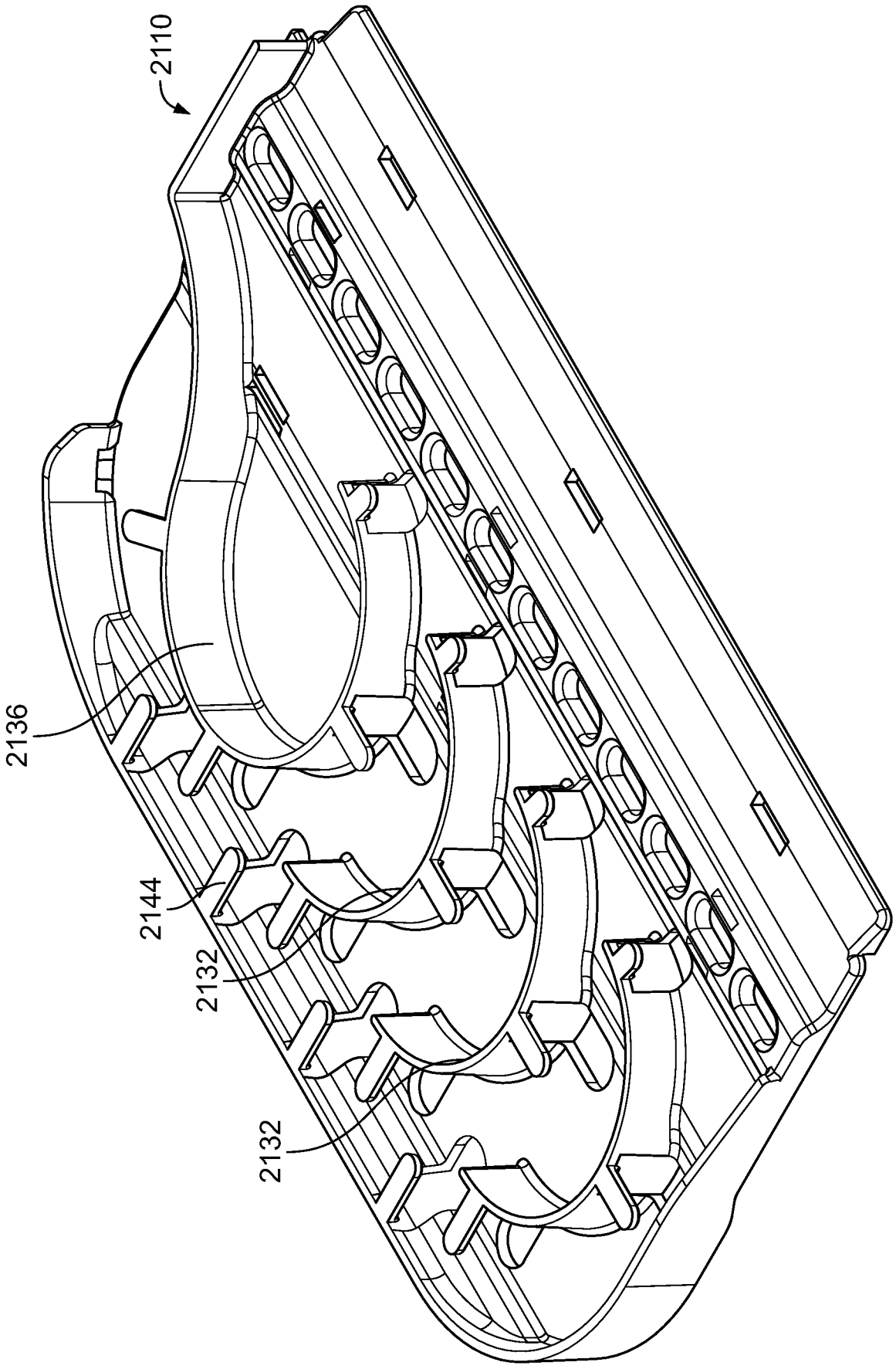

FIG. 102

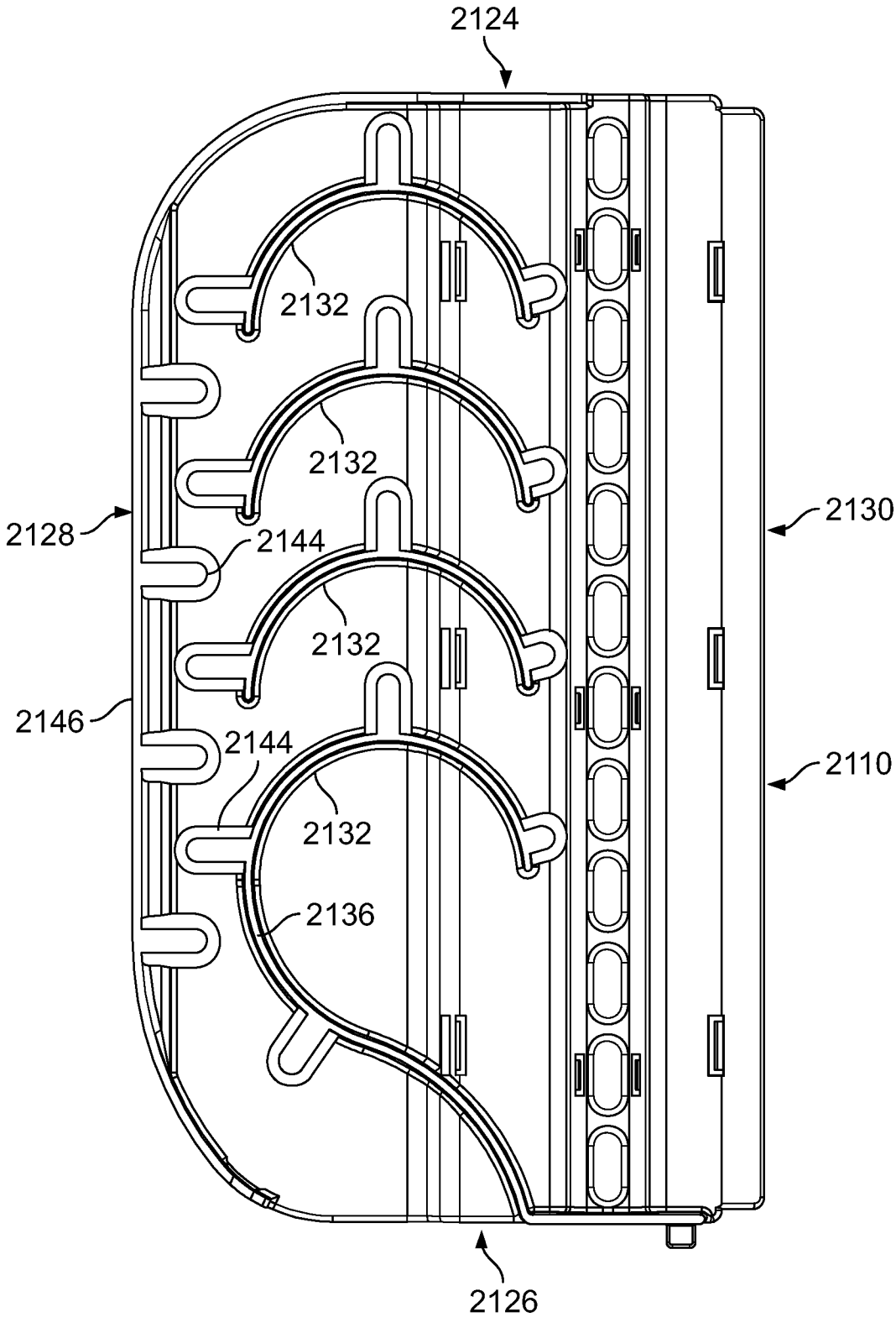
2124
2132
2132
2128
2144
2130
2132
2146
2144
2110
2132
2136
2126

FIG. 103

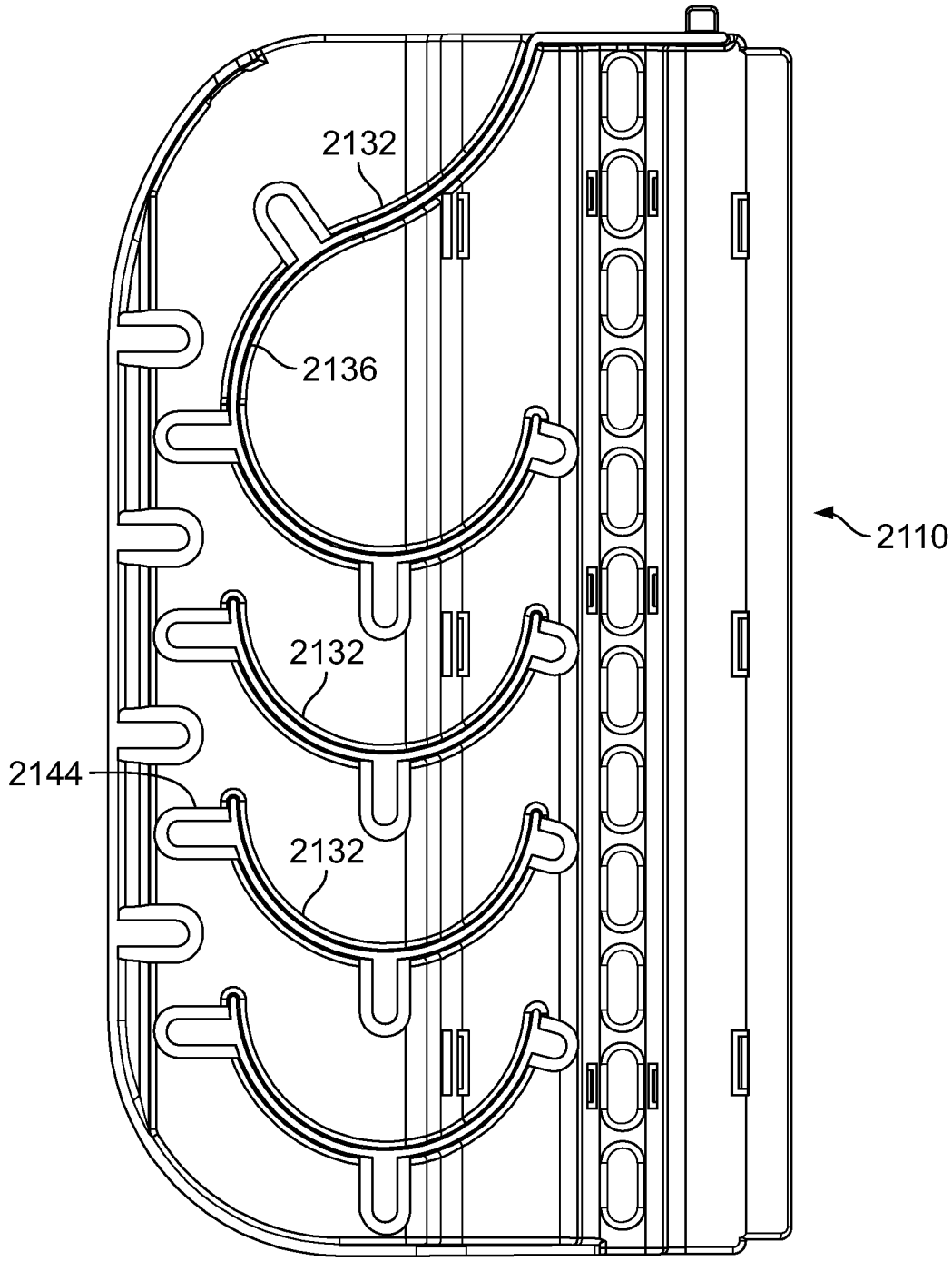

FIG. 104

FIG. 105

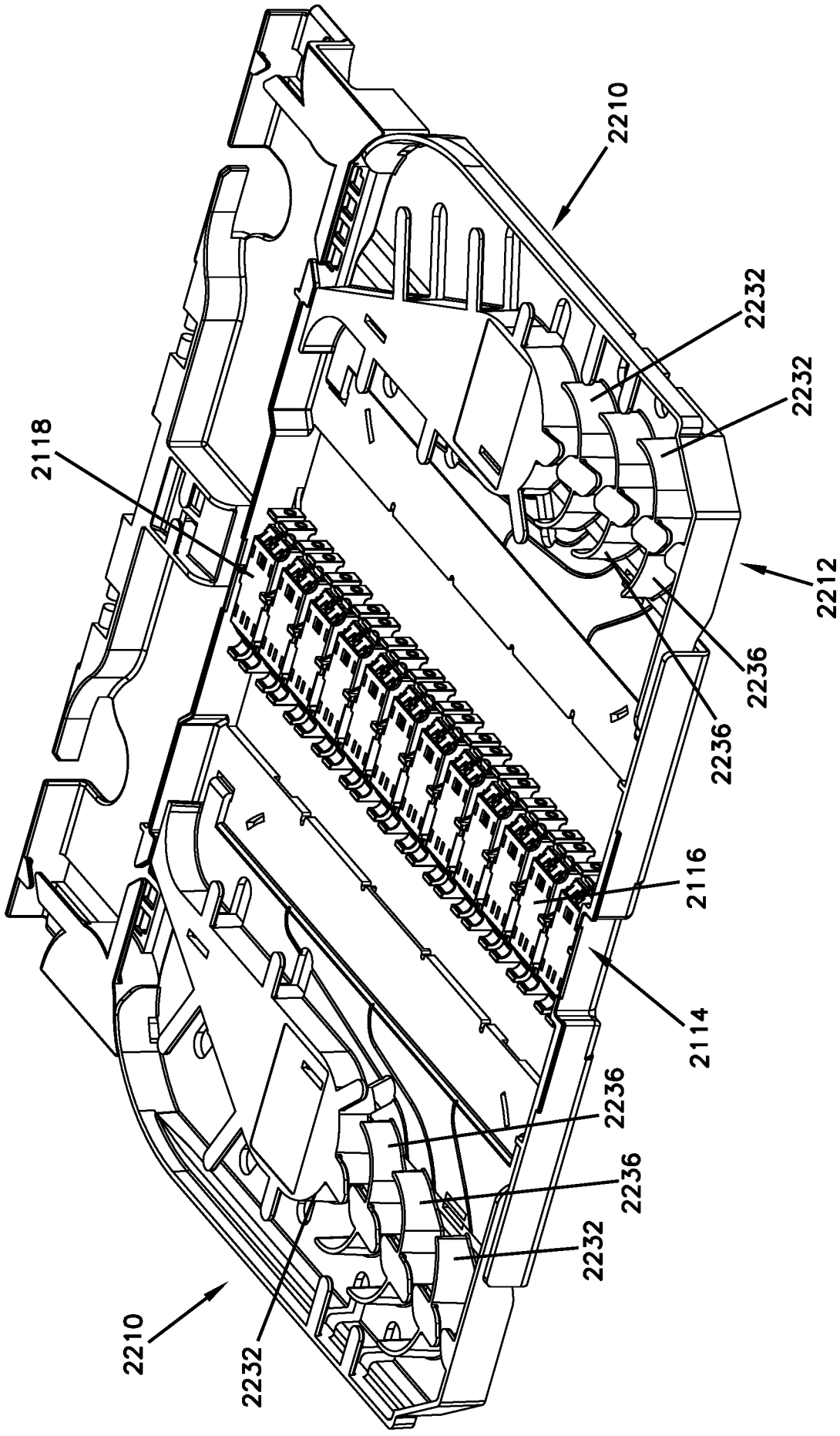
2210
2232
2118
2232
2232
2212
2236
2236
2116
2114
2236
2236
2232
2210
2232

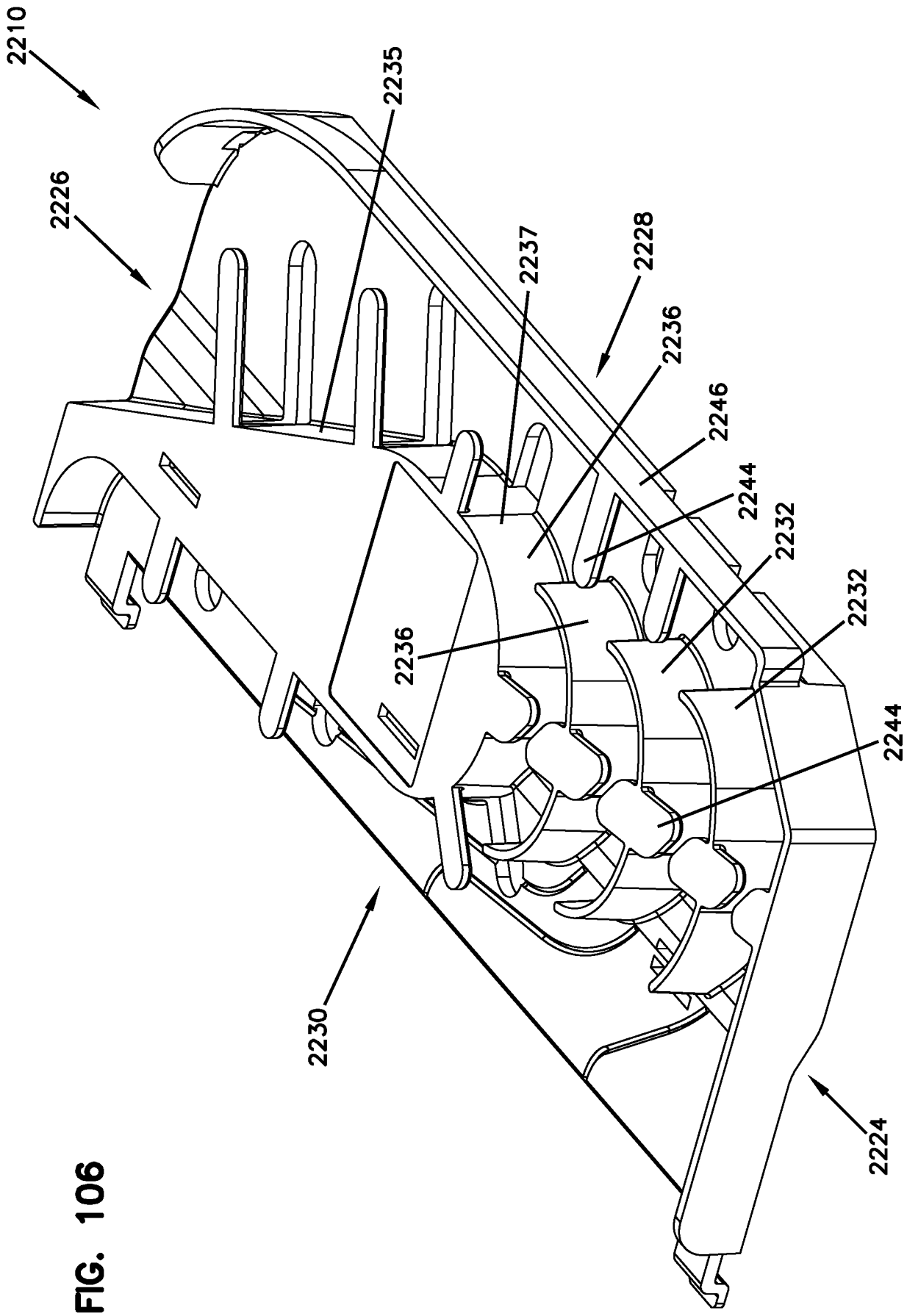
2210
2235
2226
2237
2228
2236
2246
2244
2232
2232
2236
2244
2230
2224

FIG. 106

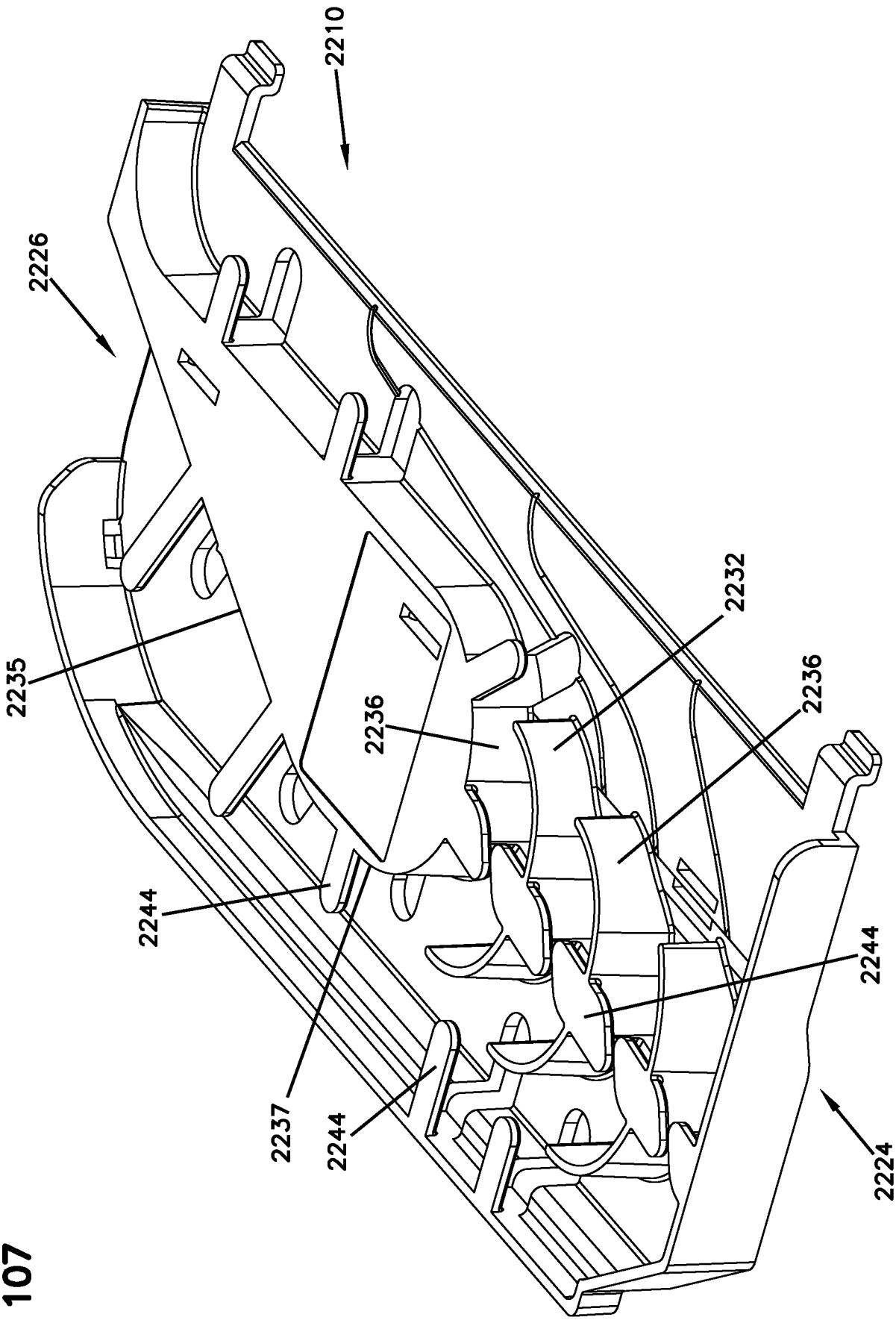

FIG. 107

INTERNATIONAL SEARCH REPORT

International application No
PCT/EP2016/057294

A. CLASSIFICATION OF SUBJECT MATTER
INV. G02B6/44
ADD.

According to International Patent Classification (IPC) or to both national classification and IPC

B. FIELDS SEARCHED

Minimum documentation searched (classification system followed by classification symbols)
G02B

Documentation searched other than minimum documentation to the extent that such documents are included in the fields searched

Electronic data base consulted during the international search (name of data base and, where practicable, search terms used)
EPO-Internal, WPI Data

C. DOCUMENTS CONSIDERED TO BE RELEVANT

Category*	Citation of document, with indication, where appropriate, of the relevant passages	Relevant to claim No.
X	WO 2014/173930 A1 (TYCO ELECTRONICS RAYCHEM BVBA [BE]; GEENS JOHAN [BE]; VERMEULEN PIETER) 30 October 2014 (2014-10-30) cited in the application abstract; figures 30-41, 52,54,55	1-14
X	EP 2 093 596 A2 (TYCO TELECOMM US INC [US]) 26 August 2009 (2009-08-26) abstract; figures 1A, 1B	12,13
X	US 2002/159746 A1 (HOWELL BRET L [US] ET AL) 31 October 2002 (2002-10-31) abstract; figures 1,2	12,14

-/--

[X] Further documents are listed in the continuation of Box C.

[X] See patent family annex.

* Special categories of cited documents :

"A" document defining the general state of the art which is not considered to be of particular relevance

"E" earlier application or patent but published on or after the international filing date

"L" document which may throw doubts on priority claim(s) or which is cited to establish the publication date of another citation or other special reason (as specified)

"O" document referring to an oral disclosure, use, exhibition or other means

"P" document published prior to the international filing date but later than the priority date claimed

"T" later document published after the international filing date or priority date and not in conflict with the application but cited to understand the principle or theory underlying the invention

"X" document of particular relevance; the claimed invention cannot be considered novel or cannot be considered to involve an inventive step when the document is taken alone

"Y" document of particular relevance; the claimed invention cannot be considered to involve an inventive step when the document is combined with one or more other such documents, such combination being obvious to a person skilled in the art

"&" document member of the same patent family

Date of the actual completion of the international search	Date of mailing of the international search report
3 June 2016	10/06/2016

Name and mailing address of the ISA/	Authorized officer
European Patent Office, P.B. 5818 Patentlaan 2 NL - 2280 HV Rijswijk Tel. (+31-70) 340-2040, Fax: (+31-70) 340-3016	Elflein, Wilhelm

1

Form PCT/ISA/210 (second sheet) (April 2005)

INTERNATIONAL SEARCH REPORT

International application No
PCT/EP2016/057294

C(Continuation). DOCUMENTS CONSIDERED TO BE RELEVANT

Category*	Citation of document, with indication, where appropriate, of the relevant passages	Relevant to claim No.
X	WO 99/38042 A1 (RAYCHEM SA NV [BE]; RAYCHEM LTD [GB]; WAMBEKE ALAIN [BE]; PEETERS ERIK) 29 July 1999 (1999-07-29) abstract; figures 1,4,8	14
A	US 2011/123165 A1 (BARTH MICHAEL KENNETH [US] ET AL) 26 May 2011 (2011-05-26) abstract; figures 3,4	2

1

INTERNATIONAL SEARCH REPORT

Information on patent family members

International application No
PCT/EP2016/057294

Patent document cited in search report	Publication date	Patent family member(s)	Publication date
WO 2014173930 A1	30-10-2014	AU 2014257607 A1	12-11-2015
		CN 105393151 A	09-03-2016
		EP 2989497 A1	02-03-2016
		ES 1148433 U	30-12-2015
		US 2016077300 A1	17-03-2016
		WO 2014173930 A1	30-10-2014
EP 2093596 A2	26-08-2009	CN 101533130 A	16-09-2009
		EP 2093596 A2	26-08-2009
		ES 2494990 T3	16-09-2014
		US 2009214172 A1	27-08-2009
US 2002159746 A1	31-10-2002	NONE	
WO 9938042 A1	29-07-1999	AR 014321 A1	07-02-2001
		AT 210838 T	15-12-2001
		AU 738624 B2	20-09-2001
		AU 2064299 A	09-08-1999
		BR 9907192 A	17-10-2000
		CA 2317040 A1	29-07-1999
		CN 1288525 A	21-03-2001
		CZ 20002374 A3	13-12-2000
		DE 69900589 D1	24-01-2002
		DE 69900589 T2	18-07-2002
		DK 1049949 T3	02-04-2002
		EP 1049949 A1	08-11-2000
		ES 2165726 T3	16-03-2002
		IL 136971 A	27-09-2004
		MY 121381 A	28-01-2006
		NO 20003731 A	20-07-2000
		PE 02892000 A1	06-04-2000
		PL 341516 A1	23-04-2001
		PT 1049949 E	28-03-2002
		RO 120433 B1	30-01-2006
		RU 2206114 C2	10-06-2003
		TR 200002141 T2	22-01-2001
		US 6504986 B1	07-01-2003
		WO 9938042 A1	29-07-1999
		ZA 9900443 A	21-07-1999
US 2011123165 A1	26-05-2011	AU 2007215414 A1	23-08-2007
		BR PI0707732 A2	10-05-2011
		CN 101384936 A	11-03-2009
		CN 101384937 A	11-03-2009
		EP 1987384 A2	05-11-2008
		JP 2009527005 A	23-07-2009
		KR 20080094830 A	24-10-2008
		TW I432808 B	01-04-2014
		US 2007189691 A1	16-08-2007
		US 2011123165 A1	26-05-2011
		WO 2007095029 A2	23-08-2007