United States Patent

Venus, Jr.

[15] **3,651,997**

[45] **Mar. 28, 1972**

[54] **COMBINED PRESSURE FILLING AND DISPENSING CONTROL VALVE FOR AEROSOL CONTAINERS**

[72] Inventor: **Frank Venus, Jr.**, Watertown, Conn.

[73] Assignee: **The Risdon Manufacturing Company**, Naugatuck, Conn.

[22] Filed: **Mar. 23, 1970**

[21] Appl. No.: **21,963**

[52] **U.S. Cl.** **222/402.16**, 141/20

[51] **Int. Cl.** **B65d 83/14**

[58] **Field of Search** 222/207, 402.16, 402.24, 402.1, 222/402.2, 394, 544; 141/3, 20

[56] **References Cited**

UNITED STATES PATENTS

3,104,785	9/1963	Beard	222/207
3,158,297	11/1964	Ferry et al.	222/402.16
3,061,203	10/1962	Kitabayashi	222/402.24 X
3,036,743	5/1962	Rhodes et al.	222/402.16
2,774,520	12/1956	Laundry	222/402.24

Primary Examiner—Samuel F. Coleman
Assistant Examiner—Larry H. Martin
Attorney—Steward & Steward, Merrill F. Steward, Donald T. Steward and Walter D. Hunter

[57] **ABSTRACT**

A valve for an aerosol dispensing container which functions not only to control normal fluid dispensing from the container but also facilitates pressure filling where the valve is sealed in the mouth of the container prior to loading. The valve employs a tailpiece and plastic dip tubing mounted on the tailpiece, in conjunction with a coaxial integral sleeve on the valve housing, to form a resilient seal which is effective against fluid bypassing the dip tube at normal internal operating pressures of the aerosol dispenser, but which permits such bypassing to occur when filling pressures are introduced into the valve housing. Preferably the valve also incorporates special sealing grommets surrounding the neck of the valve stem which act as a one-way check valve providing increased flow rate of fluid product around the valve stem during pressure filling.

9 Claims, 10 Drawing Figures

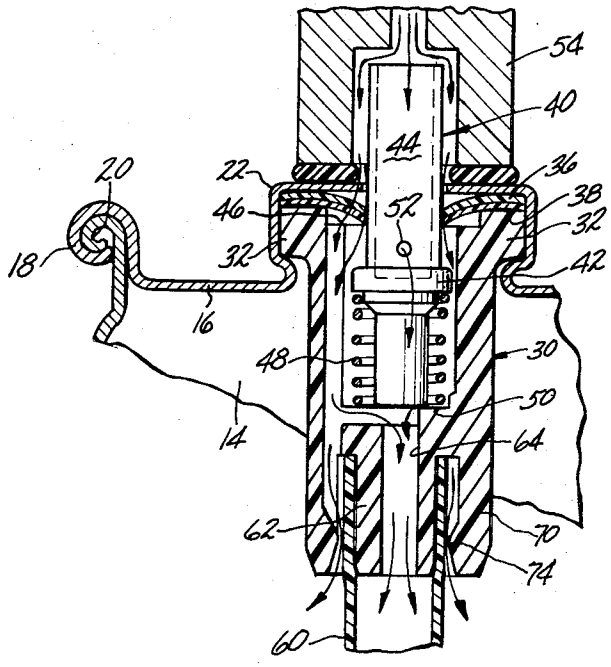

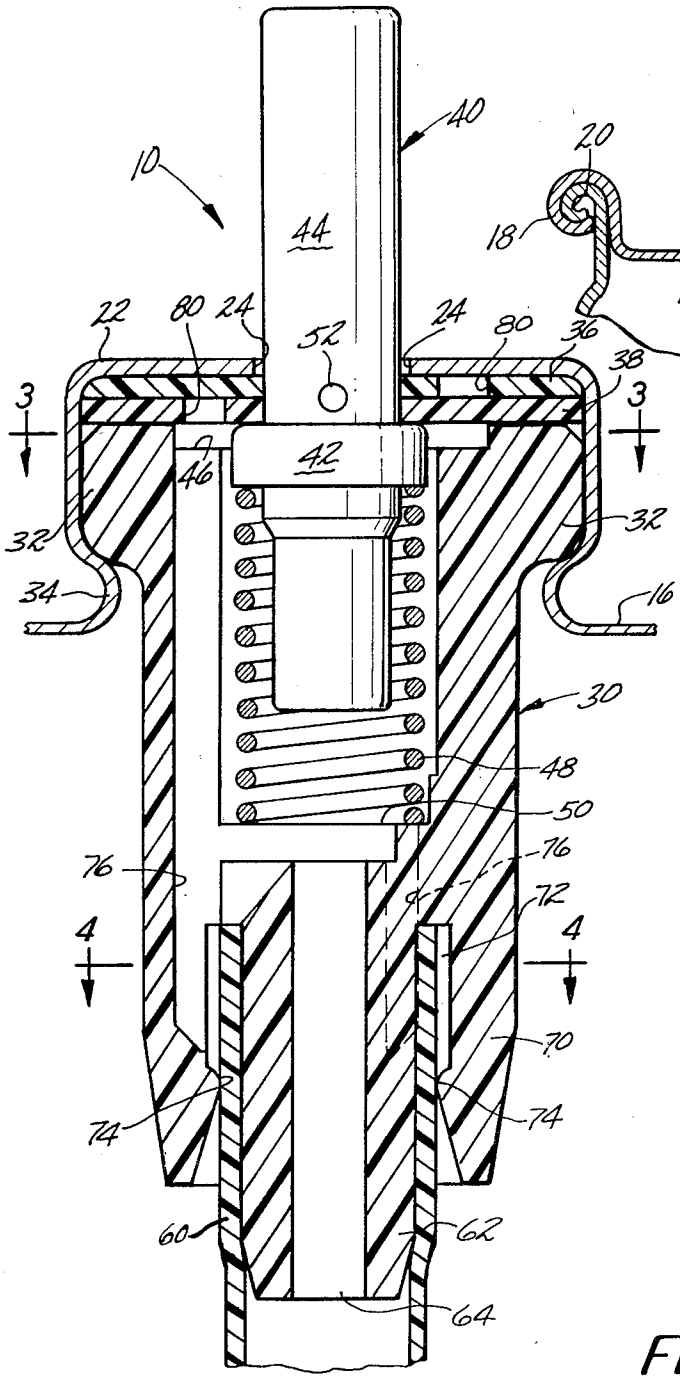

FIG-2

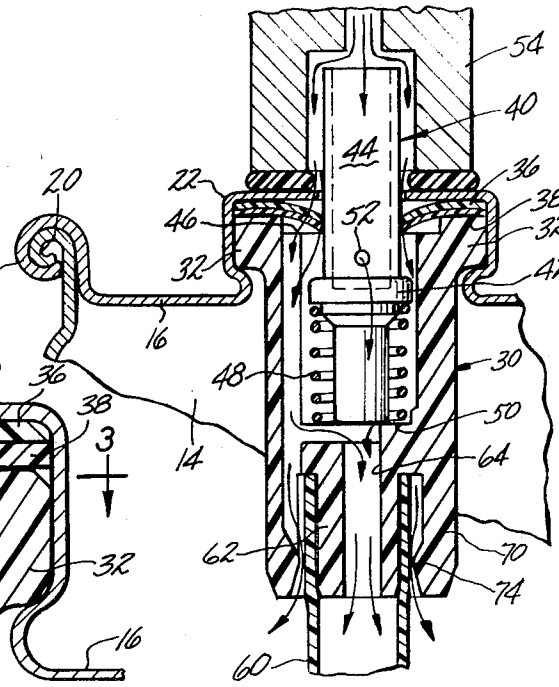

FIG-1

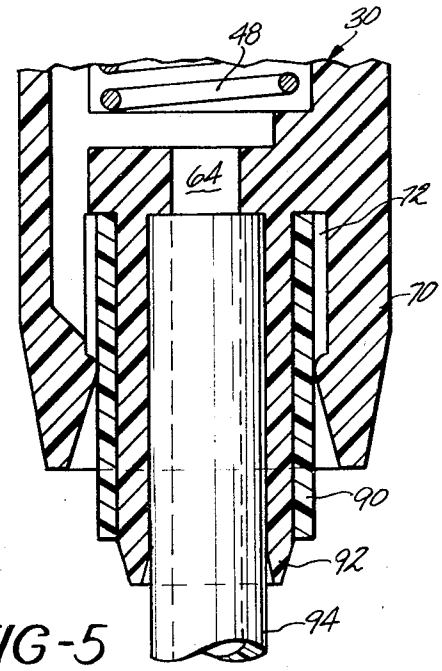

FIG-5

INVENTOR:
FRANK VENUS, JR.

BY Steward & Steward
his ATTORNEYS

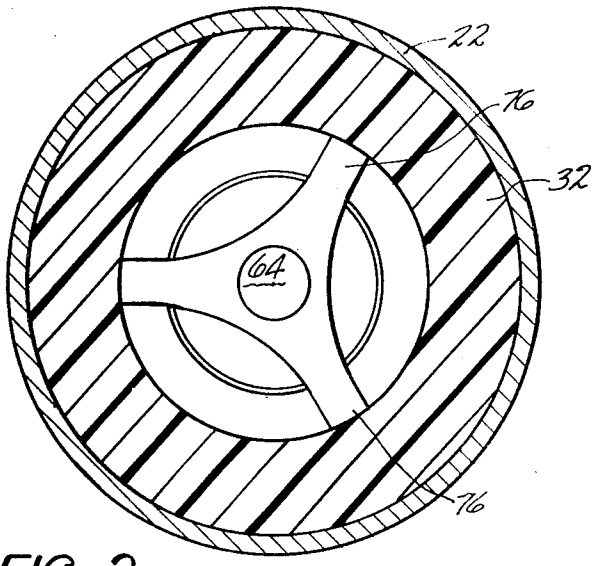

FIG-3

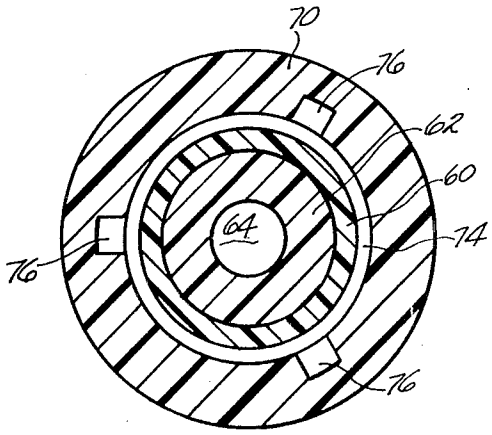

FIG-4

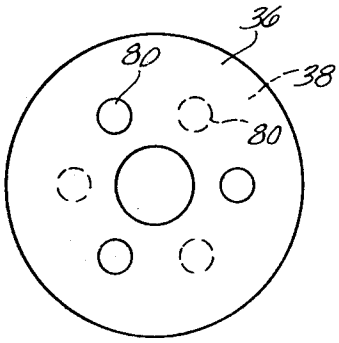

FIG-6

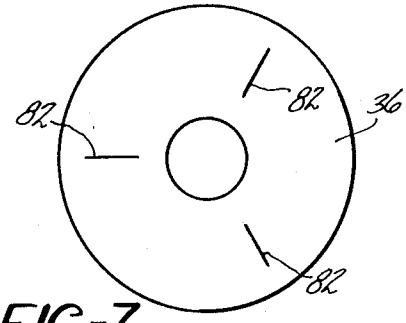

FIG-7

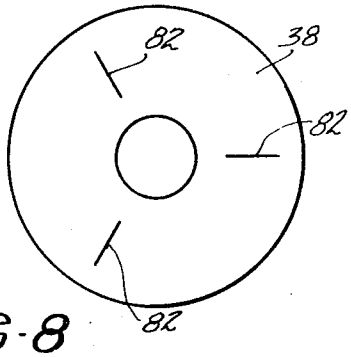

FIG-8

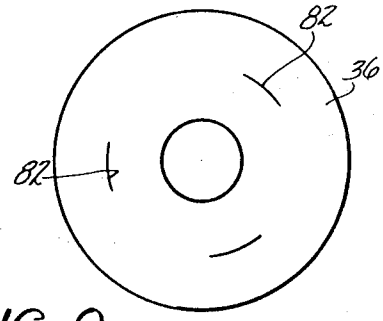

FIG-9

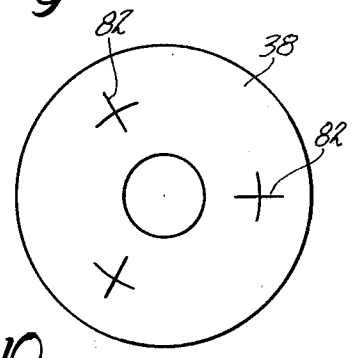

FIG-10

INVENTOR:
FRANK VENUS, JR.

BY Steward + Steward

ATTORNEYS

COMBINED PRESSURE FILLING AND DISPENSING CONTROL VALVE FOR AEROSOL CONTAINERS

This invention relates to values for aerosol or self-pressurized dispensing containers, and more particularly to valves of this type which facilitate the pressure filling or charging of fluid product into the container after the valve has been permanently sealed in the mouth of the container.

The method of pressure filling aerosol containers after the valve assembly has been fixed in the mouth of the container, thereby closing the container, is well-known and provides certain advantages over the alternative "cold-filling" method. The latter involves chilling the fluid product and particularly the pressure-producing gas component thereof to a point where the vapor pressure of the fluid is sufficiently low to avoid excessive evaporation losses during filling and capping operations. Some of the arrangements heretofore proposed for valves having capability for pressure filling of aerosol containers are shown in United States patents such as St. Germain, U.S. Pat. No. 2,746,796; Rheinstrom, U.S. Pat. No. 2,890,817; Bradbury, U.S. Pat. No. 2,961,131; Rhodes et al., U.S. Pat. No. 3,036,743 and 3,081,916; Nesin, U.S. Pat. No. 3,096,003; Beard, U.S. Pat. No. 3,104,785; Briechle, U.S. Pat. No. 3,158,298; Venus, U.S. Pat. No. 3,185,356; and Kuffer, U.S. Pat. No. 3,375,957. Since the valves in question are of the disposable type, in that they are not reclaimed or reused but are simply thrown away with the empty container, and since they are employed in very large quantities, even small economies in valve design play an extremely significant part in the commercial suitability and success of any particular valve. The valves of this invention are accordingly designed with this in mind and through dual use of certain essential components of the valve assembly, a valve of the desired type is afforded having fewer parts and/or effecting more economical use of the same parts than valves provided heretofore for the same purpose.

To this end, valves incorporating this invention are characterized by employing the conventional dip tube at its point of attachment to a molded plastic valve housing in such manner that these member coact to form as a one-way bypass valve. While the dip tubing employed can be quite rigid, it is preferable that it have resiliency of the order provided by conventional dip tubes of polyethylene, polypropylene, etc. The plastic of which the valve housing is molded should however not be of the highly rigid type, such as the acrylic resins usually provide. Rather, linear polyethylene or polypropylene, for example, having good physical stability with reasonable resiliency is best for the housing. This resiliency is supplemented by the particular configuration in which the valve housing inlet is molded, as hereinafter discussed. The purpose is to provide and an auxiliary fluid or bypass fluid passage at the inner end of the dip tube, supplementing the normal path of fluid flow through the dip tube, in order to increase the capacity of the valve assembly for higher rates of fluid product flow during charging or pressure filling operations. Preferably valves of the invention also include a special design of grommet for sealing the neck of the valve stem at the discharge or outlet side of the valve housing, which cooperates with the dip tube bypassing arrangement mentioned above.

Further details of the invention will be apparent from the following description of specific embodiments shown in the accompanying drawings, in which

FIG. 1 is an enlarged fragmentary view in cross-sectional elevation of an aerosol container incorporating a valve embodying the invention, certain parts being broken away for clarity of illustration, the valve being shown in pressure filling mode of operation;

FIG. 2 is a similar cross-sectional view on still larger scale showing the valve in normal closed condition;

FIG. 3 is a cross-sectional view taken on line 3—3 of FIG. 2 looking in the direction of the arrows;

FIG. 4 is a cross-sectional view taken on line 4—4 of FIG. 2, looking in the direction of the arrows;

FIG. 5 is a fragmentary view of the lower end of a valve assembly similar to that seen in FIG. 2 but showing a modification thereof; and

FIGS. 6 through 10 are plan views of various valve stem sealing grommets adapted to be used in the valve assembly.

In FIG. 1 the illustration depicts a portion of the upper part of an aerosol dispenser equipped with a valve of the present invention, the valve being shown in pressure filling or charging mode of operation. Valve assembly 10 is mounted in the open mouth 12 of a container 14, assembly 10 including a mounting cup 16 whose peripheral flange 18 is rolled over lip 20 at the mouth of the container thus closing the container. Mounting cup 16 is formed centrally with an upstanding cylindrical boss 22 having a central aperture 24 in its top wall. A tubular valve housing 30 of molded plastic is formed with an external shoulder 32 at its upper end which is received internally of boss 22, and the sidewall of boss 22 is crimped or staked beneath this shoulder at several points 34 about its circumference to securely grip and retain the valve housing in the mounting cup. Housing 30 cooperates with the upper wall of boss 22 to grip the periphery of superimposed resilient annular grommets 36, 38, providing a fluid seal between shoulder 32 and the top wall of boss 22.

A tubular valve core 40 is telescopingly received in valve housing 30, core 40 having a radially enlarged shoulder 42 and an integral neck portion or stem 44 of lesser diameter extending axially outward of the shoulder and projecting through aperture 24 in the top wall of boss 22. Stem 44 is sufficiently smaller in diameter than the aperture to provide appreciable clearance between the stem and margin of the aperture. For example, in actual commercial practice, the diameter of the stem portion of a typical valve core may be on the order of 0.125 inch while that of the aperture in boss 22 may be approximately 0.145 inch. The purpose of course is to allow clearance for the introduction of aerosol product around the valve core, as well as through it, in the pressure filling process. Each of grommets 36, 38 is apertured centrally to receive and make a sliding seal with the periphery of stem 44. During pressure filling, as seen in FIG. 1, the body portions of the grommets surrounding their apertures are flexed inwardly of the valve housing, and the housing is formed with an annular recess 46 at its upper end to permit such flexure to occur more easily. In the normal closed position of valve core 40 (FIG. 2), its shoulder 42 abuts the margin of the aperture in the lower grommet 38 to compress both it and superimposed grommet 36 against the top wall of boss 22, thus sealing the outlet of housing 30. An axial compression spring 48 confined between shoulder 42 of valve core 40 and a peripheral shelf or step 50 within housing 30, normally biases the core to the valve-closed position. In this position, discharge port 52 in stem 44 of the valve core is maintained out of communication with the interior of the valve housing 30. When the valve core is depressed, however, as when normal dispensing from the aerosol container is desired, port 52 is moved below gaskets 36, 38, into communication with the interior of the housing. In such position, fluid under pressure within housing 30 passes through port 52 and out through the hollow interior of stem 44 for dispensing. Usually an actuator button (not shown) incorporating a discharge nozzle is mounted on the projecting end of stem 44.

The open position of valve core 40 just described is also utilized during pressure filling, as shown in FIG. 1, where a filling head 54 is applied over the projecting stem 44 and held in temporary sealing contact against the upper face of boss 22 while aerosol fluid product under substantial pressure is pumped through the head and into container 14, passing both through and around valve core 40 in the process, as mentioned above.

Valve housing 30 is also provided with the usual dip tube 60 which is received on tailpiece 62, the latter having a central bore 64 leading from the interior of the valve housing to the inlet end of the tailpiece.

The valve construction thus far described is generally similar to established commercial aerosol valve design. Without the incorporation of the further features constituting the present invention, the rate of fluid product flow into a container during pressure filling will be limited by the resistance

imposed at the outlet, i.e., upper end, of valve housing **30** and by the substantial resistance imposed by bore **64** in tailpiece **62** and especially by the relatively small bore and great length of dip tubing **60**. Such resistance is reduced and the pressure filling rate substantially increased by employing valves incorporating the present invention.

According to the present invention, a fluid bypass is provided to permit fluid to be pumped into the interior of the housing independently of bore **64** and dip tubing **60** in filling the container. To this end, housing **30** is formed with an integral sleeve **70** coaxial of and at least partially coextensive with tailpiece **62** but which is in radially spaced relation to it, forming an annular well **72** in which the upper end of dip tubing **60** is received. The lower or free end of sleeve **70** is molded to provide an internal peripheral lip or bead **74** proportioned to make resilient engagement circumferentially of the outer surface of the dip tube within the axially coextensive limits of the sleeve and tailpiece. Preferably the wall of sleeve **70** is tapered in the region of lip **74** so as to reduce the wall thickness and increase the radial flexibility of the sleeve at this point. Annular well **72** communicates with the interior of valve housing **30** through one or more axial slots or grooves in **76** formed in the inner wall of the housing, such grooves terminating short of the lip **74** of sleeve **70**.

By properly coordinating the resiliency of the molded plastic of which the valve housing and possibly also the dip tube are formed, as well as proportioning the thickness of the wall of sleeve **70**, the engagement between internal lip or bead **74** and dip tubing **60** can be made to form a fluid seal about the tubing which is effective to prevent bypassing of fluid under normal dispensing pressures existing within the container to which the valve is assembled, yet yieldable at fluid pressures significantly greater than normal dispensing pressure to allow fluid to flow between the lip and dip tube in the manner indicated by the arrows in FIG. **1**. Obviously fluid will still of course pass through bore **64** and dip tube **60** so that the flow passages operate in parallel during the filling mode of operation but the greater part of the flow occurs trough the bypass. When the filling pressure imposed by head **54** is removed, the seal between lip **74** and dip tube **60** is automatically reestablished.

In commercial practice, the normal pressure maintained in an aerosol dispenser to expel the fluid product when the valve is operated by the user will range from approximately 14 pounds per square inch gauge to 40 or 50 p.s.i.g. On the other hand, filling pressures imposed by pumping the product through filling head **54** are normally on the order of at least 600 p.s.i.g. and higher if the valve will stand it. The bypassing arrangement here disclosed permits such higher pressures to be utilized, thus greatly speeding up the filling process.

While a single outlet sealing grommet can be employed in place of the multiple grommet **36**, **38**, arrangement specifically illustrated, the arrangement shown is preferred not only because it is possible to get a more effective sliding seal between the margin of the grommet and stem **44** of valve core **40**, but because a greater pressure filling flow rate can be achieved by using two or more grommets whose annular body portions are pierced at peripherally spaced points, with the piercing in one grommet being rotatably offset from that of the adjacent grommet or grommets. Additional fluid flow paths through the grommets are thus provided. This piercing can take the form of small holes or apertures **80** in the annular body portion of the grommets, as seen in FIG. **6** wherein holes **80** of the upper grommets are angularly offset from those of the subadjacent grommet. Or the grommets may be slit, as seen in FIGS. **7** and **8**, and superimposed so that the slits in one are out of registry with those of the other. The slits may be circumferential as well as radial, or may be a combination of both, as seen in FIGS. **9** and **10**.

In those instances where the nature of the aerosol product is such that a very small bore dip tube is desirable in the valve assembly, it usually will not be practical to use the outer surface of the dip tube as one element of the bypass sealing arrangement. In such case, however, a short length **90** of standard diameter dip tubing can be employed as seen in FIG. **5** over tailpiece **92** and the latter bored internally to receive a small bore or capillary type of dip tube **94**. In other respects the arrangement of the valve in FIG. **5** is the same as that shown in FIGS. **1** through **4**.

What is claimed is:

1. In a combined pressure filling and dispensing valve for an aerosol container having a filling mouth, said valve including

a molded plastic tubular housing having open inlet and outlet ends,

a mounting cup engaging said housing at its outlet end to support it in the mouth of a container and to close the container, said cup having an opening aligned with the axis of said housing,

a tubular valve core telescopingly received in said housing and having a neck portion projecting through said mounting cup opening in radially spaced relation to the margin thereof,

sealing means about said neck portion to close the outlet end of said valve housing, said valve core normally blocking release of aerosol product from said housing but axially depressable relative thereto to permit release of aerosol product through said core;

the improvement which comprises:

a. an integrally formed tubular tailpiece at the inlet end of said valve housing providing a conduit for communicating the interior of the housing with the interior of a container,

b. a length of resilient plastic dip tubing disposed over said tailpiece,

c. a sleeve also formed integrally on said housing coaxially of and at least partially coextensive with said tailpiece in radially spaced relation thereto to form an annular well in which said dip tubing is received,

d. a peripheral lip formed internally in said sleeve, said lip making resilient engagement circumferentially of the surface of said dip tubing within the axially coextensive limits of said sleeve and tailpiece, and

e. fluid passage means communicating said annular well internally of said lip with the interior of said valve housing.

2. A combined pressure filling and dispensing control valve as defined in claim **1**, wherein the wall of said sleeve is radially resilient in the region of said lip.

3. A combined pressure filling and dispensing control valve as defined in claim **2**, wherein the wall of said sleeve in the region of said lip is tapered to reduce its thickness.

4. A combined pressure filling and dispensing control valve as defined in claim **1**, wherein a peripheral bead is formed on the inner wall of said sleeve adjacent its free terminus to provide said lip.

5. A combined pressure filling and dispensing control valve as defined in claim **1**, wherein said length of dip tubing disposed over said tailpiece is substantially coextensive with said tailpiece and said tailpiece is formed with an internal socket for reception therein of an additional length of dip tubing.

6. A combined pressure filling and dispensing control valve for an aerosol container having a filling mouth comprising,

a rigid mounting cup for closing said container mouth and for supporting said valve assembly on said container, said mounting cup having a central opening,

a tubular valve housing of molded plastic open at its opposite ends with the outer end secured in said cup coaxially with the opening thereof,

a tubular valve core telescoped within said valve housing and having a radially enlarged annular shoulder and an integrally joined neck of reduced diameter projecting axially outwardly through the opening in said cup in marginally spaced relation to said opening,

annular resilient gasket means gripped on its outer periphery between said mounting cup and valve housing, said gasket means having a body portion free for axial flexure and a central aperture, the margin of which em-

braces said neck of the valve core to provide a sliding seal therewith,

a spring compressed axially between said valve housing and valve core to urge the latter outwardly of the housing and compress the body portion of said gasket means between said shoulder and mounting cup,

said tubular valve core being closed at its inner end and having a port extending through the wall of said valve core neck adjacent said shoulder, said port being normally closed by said gasket means but movable into communication with the interior of said valve housing by axial depression of said valve core against said spring,

and conduit means at the inlet end of said valve housing for communicating the interior of said housing with the interior of the aerosol container, said conduit means including a tubular tailpiece integrally formed on said housing and a length of resilient plastic dip tubing received over said tailpiece,

a sleeve on said valve house integrally joined at one end to said housing coaxially of and at least partially coextensive with said tailpiece and being radially spaced from said tailpiece to provide an annular well within which said dip tubing is received,

said sleeve having on its interior surface a peripheral lip which makes contact circumferentially of the surface of said plastic dip tubing to form a seal thereabout within the axially coextensive limits of said sleeve and tailpiece, said

contact being effective to prevent bypassing of fluid at normal operating pressures of the aerosol dispenser but sufficiently resilient to permit radial distortion at fluid pressures significantly greater than normal dispensing pressure to break said seal and allow fluid to pass between said lip and dip tubing,

passage means formed in said valve housing communicating said annular well internally of said lip with the interior of said valve housing;

said gasket means at said housing outlet end comprising at least two superimposed resilient grommets, each being axially pierced in its annular body portion at circumferentially spaced points, said grommets being rotatively positioned in said valve housing such that the piercing in each of them is angularly offset from that of adjacent grommets.

7. A combined pressure filling and dispensing control valve as defined in claim **6**, wherein said grommets are pierced to provide circumferentially spaced holes.

8. A combined pressure filling and dispensing control valve as defined in claim **6**, wherein said grommets are pierced to provide circumferentially spaced slits.

9. A combined pressure filling and dispensing control valve as defined in claim **6**, wherein one grommet is pierced to provide holes and the other to provide slits.

* * * * *