H. D. LATHROP.

SPRAY HEAD.

APPLICATION FILED JUNE 21, 1920.

1,408,521. Patented Mar. 7, 1922.

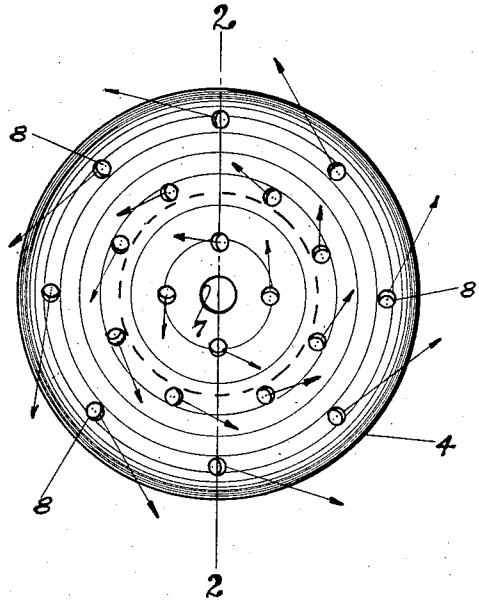

Fig. 1

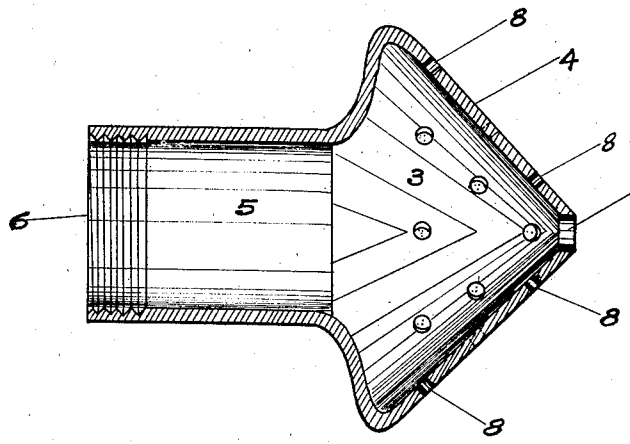

Fig. 2

Witnesses:
C. E. Fleedy
B. J. Richards

Inventor
Harry D. Lathrop
By Joshua R. H. Potts
His Attorney

UNITED STATES PATENT OFFICE.

HARRY D. LATHROP, OF CHICAGO, ILLINOIS.

SPRAY HEAD.

1,408,521. Specification of Letters Patent. Patented Mar. 7, 1922.

Application filed June 21, 1920. Serial No. 390,429.

To all whom it may concern:

Be it known that I, HARRY D. LATHROP, a citizen of the United States, and a resident of the city of Chicago, county of Cook, and State of Illinois, have invented certain new and useful Improvements in Spray Heads, of which the following is a specification.

My invention relates to improvements in spray heads, especially adapted for use on can washing machines, and has for its object the provision of an improved construction of this character arranged and constructed to project a washing or cleaning spray into the interior of cans, such as ice cream, milk cans, and the like, said spray being so directed as to efficiently cleanse the interior walls of said can by virtue of the direction thereof.

Other objects will appear hereinafter.

The invention consists in the combinations and arrangements of parts hereinafter described and claimed.

The invention will be best understood by reference to the accompanying drawings forming a part of this specification, and in which,

Fig. 1, is an end view of a spraying head embodying the invention,

Fig. 2, a longitudinal section thereof taken on line 2—2 of Fig. 1.

The preferred form of construction, as illustrated in the drawings, comprises a hollow casing 3 having a conical discharge end or spraying face 4 and an inlet 5 threaded at 6 for connection with a supply pipe supplying washing fluid under pressure. The head 3 is provided at the apex or point of the conical end 4 with a central discharge or spraying opening 7 adapted to direct a spray jet of considerable size along the axis of the cone, of the outside face 4. The surface of the discharge face 4 is also provided with a plurality of spray openings 8 of smaller size than the opening 7 and grouped symmetrically about the same as indicated. The spray openings 4 are inclined as shown both longitudinally and circumferentially with reference to the axis of the cone 4 so as to deliver what may be termed a "whirling" spray directed toward different points of the periphery of a cylinder having the axis of cone 4 as its axis.

In use, the spraying head 3 is supplied with a sufficient quantity of washing fluid under pressure through the pipe connection 5. The cans to be washed are presented to the spraying head co-axially therewith and with spray jets issuing therefrom entering the open end of the can. The jet discharged by the opening 7 will extend substantially axially through the can and strike the bottom thereof directly spreading substantially evenly over the bottom and thus thoroughly cleansing the same through the combined action of the washing fluid, and its motion. The spray jets issuing from the openings 8 will strike the inner walls of the cone at different longitudinal and circumferential points and at a longitudinal and circumferential angle with reference to the interior surface of the can, thus causing the washing fluid to travel around the interior surfaces of the cans on substantially helical curves and thus thoroughly cleansing the interior surfaces of the cans.

While I have illustrated and described the preferred form of construction for carrying my invention into effect, this is capable of variation and modification without departing from the spirit of the invention. I, therefore, do not wish to be limited to the precise details of construction set forth, but desire to avail myself of such variations and modifications as come within the scope of the appended claims.

Having described my invention, what I claim as new and desire to secure my Letters Patent is:—

1. A spray head comprising a hollow casing having spray openings leading therefrom at different points, said openings being grouped about a central axis and inclined both longitudinally and circumferentially with reference to said axis, and there being also a central spray opening extending along said axis, substantially as described.

2. A spray head comprising a hollow casing having spray openings leading therefrom at different points, said openings being grouped about a central axis and inclined both longitudinally and circumferentially with reference to said axis, said openings being symmetrically spaced about said axis and all making substantially the same angle therewith, and there being also a central spray opening extending along said axis, substantially as described.

3. A spray head comprising a hollow casing having a conical discharge end, there being spray openings extending through said conical end, said spray openings being in-

clined both longitudinally and circumferentially with reference to the axis of said cone and there being also a central spray opening at the point of said conical discharge end; and a connection for introducing fluid under pressure into said casing, substantially as described.

In witness whereof I have signed my name to this specification in the presence of two subscribing witnesses.

HARRY D. LATHROP

Witnesses:

JOSHUA R. H. POTTS,

ROSE ROSEN.